11kW stand alone wind turbine based on proven wind turbine

Per Lundsager, Risø National Laboratory

for

Henrik Bindner,Risø National Laboratory

Jens Wodstrup, Gaia Wind A/S,

Jesper Andersen, Mita-Teknik A/S

Frede Blåbjerg, Remus Teodorescu, Aalborg University

Contents

- Introduction
- The Gaia wind turbine
- Stand alone version
- Control of unit
- Test results
- Further developments
- Conclusion

Introduction

- Small power systems with renewable energy has a large potential
- Technology for such systems has to be robust and proven
- Systems and components has to be easily adapted to particular sites and be flexible for future expansions

Gaia Wind Turbine

- Has been installed for more than 5 years
- Has been installed in more than 100 places
- Has shown good operational statistics
- Standard version has induction generator directly connected to the grid
- Main data:

Rated power	11kW
Hub height	18.2m
Rotor diameter	13m
Rotor speed	56 rpm
Total weight	2400kg
Nacelle weight	900kg

Stand alone version - requirements

- Stand alone version should modify the existing wind turbine as little as possible
- It should deliver power of adequate quality for standard appliances
- It should be a flexible component in a power system – it should be as just another genset

Stand alone version - solution

- Standard Gaia wind turbine
- Back-to-back converter link using standard converters
- Controllable brake load in the dc-link
- Optional battery storage in the dc-link

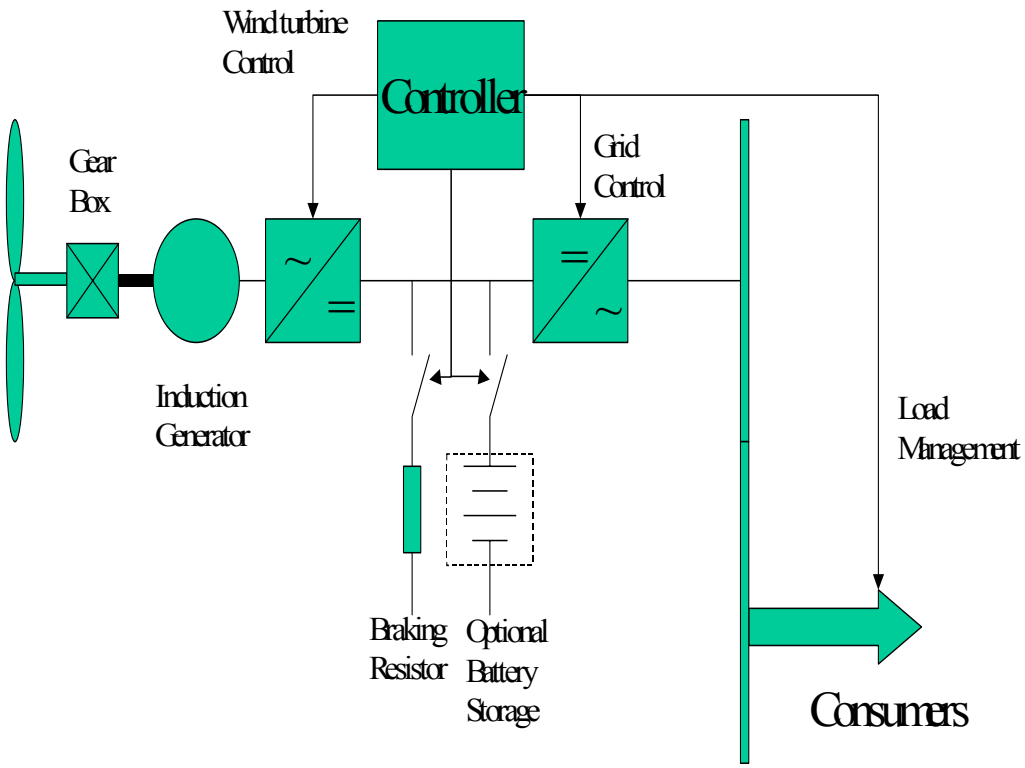

Prototype

- Controller developed in matlab/dSPACE

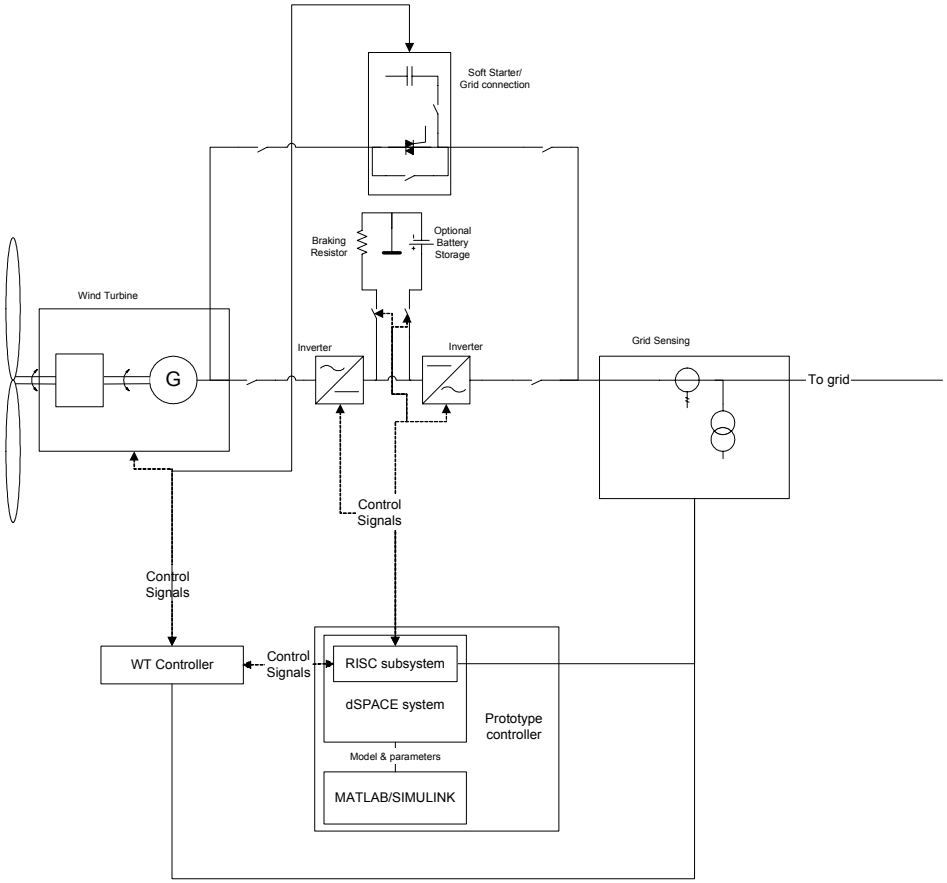

Control of unit

- Generator side converter generates grid for induction generator – the generator is speed controlled
- Grid side converter can work in parallel with other generators
- Grid side stand alone mode controller:

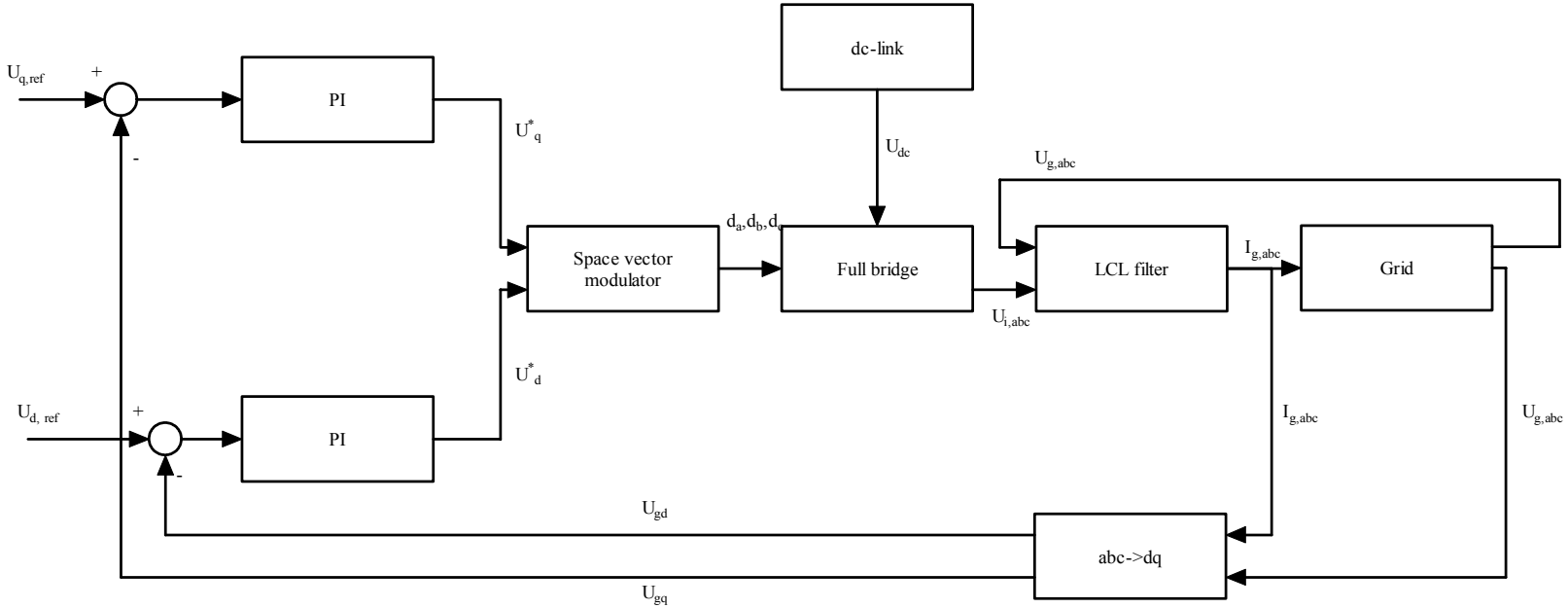

Test results – Parallel operation

- Works well in parallel operation
- Good reactive power control
- Both frequency and voltage are well controlled (by diesel genset)

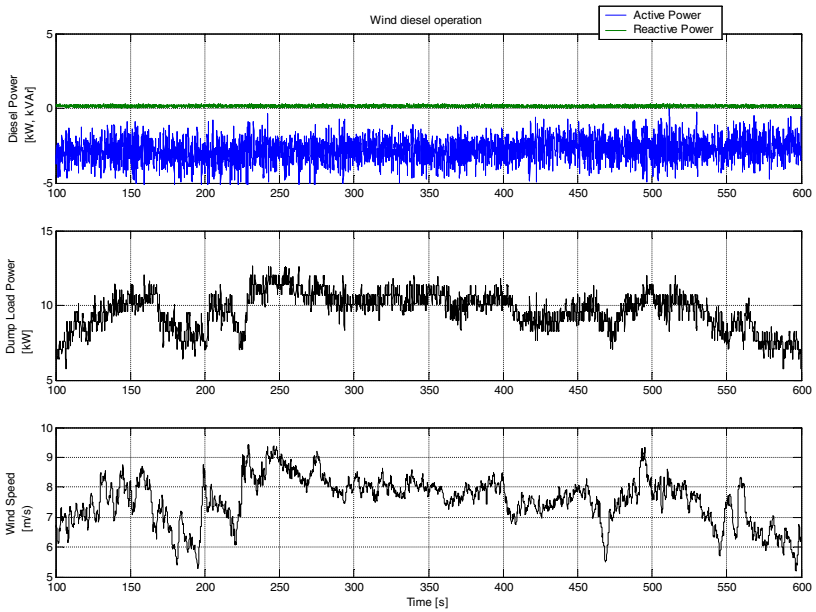

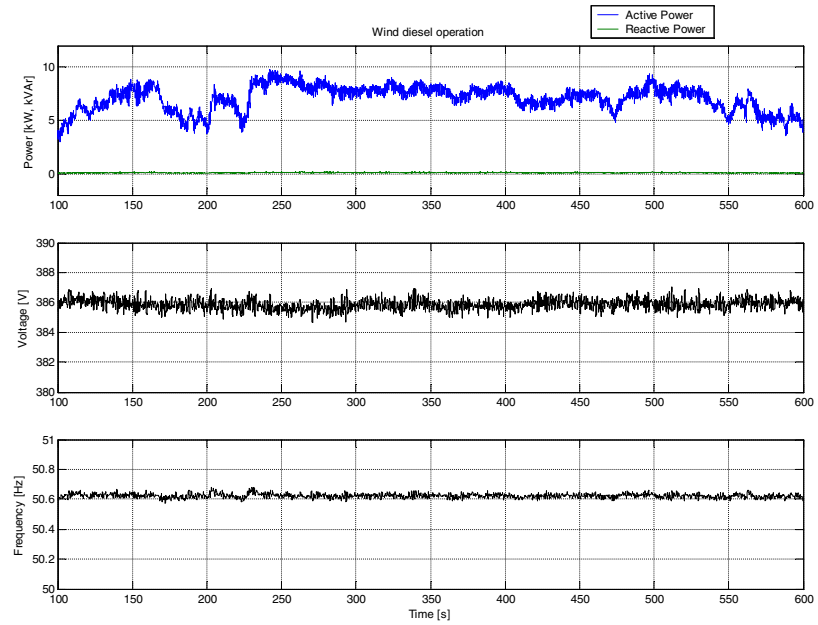

Test results – stand alone I

- Good control of both frequency and voltage
- When there is power deficit voltage is reduced rapidly to avoid overload of system

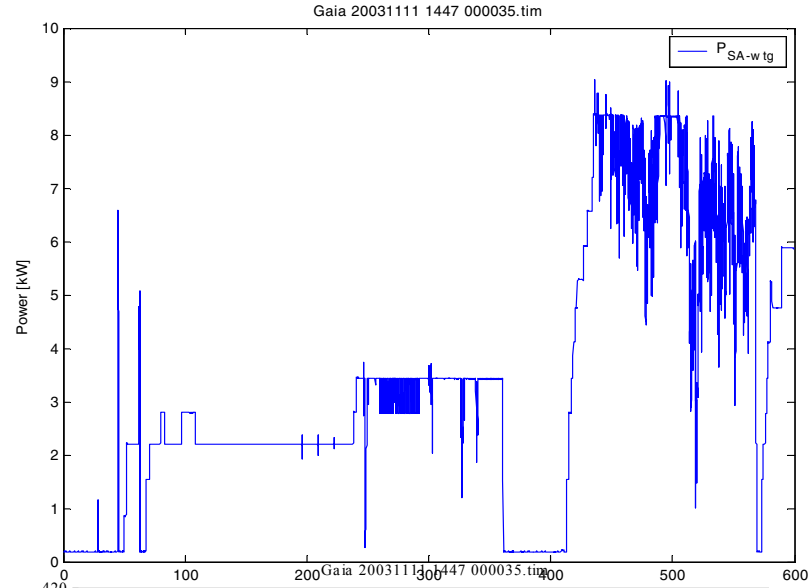

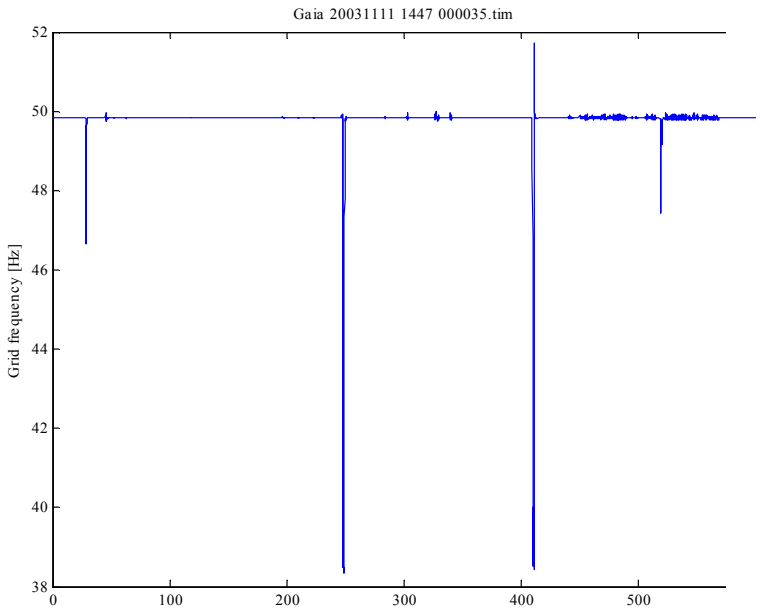

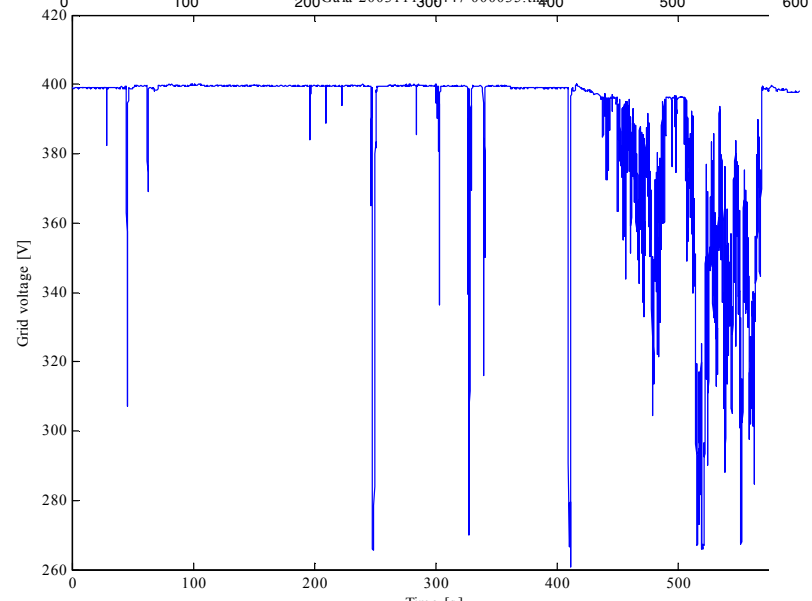

Test results – stand alone II

- Very good control of voltage and frequency
- Some very small oscillations in the voltage

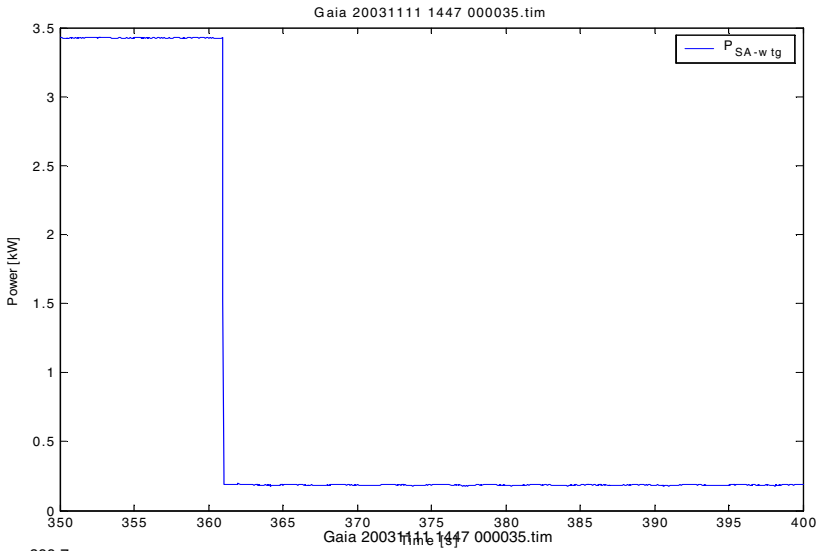

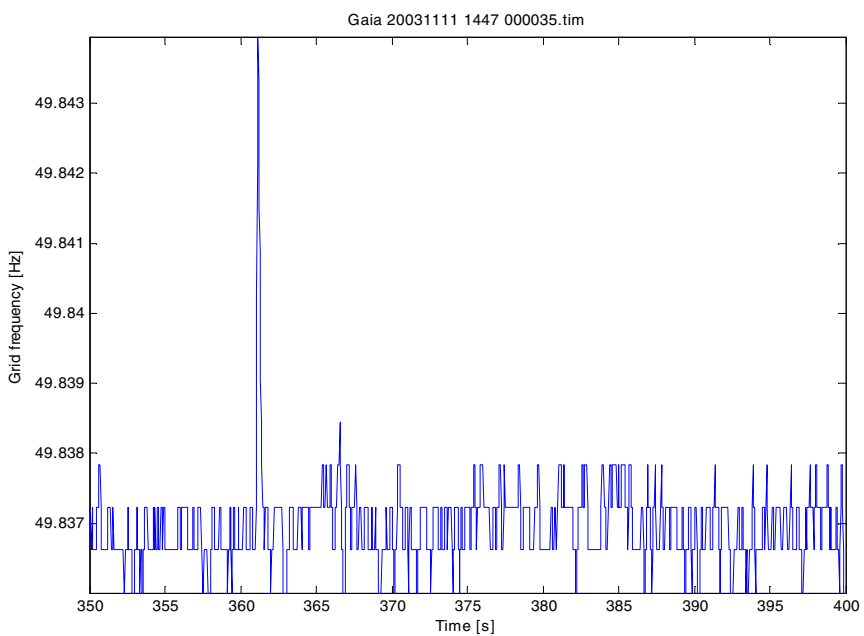

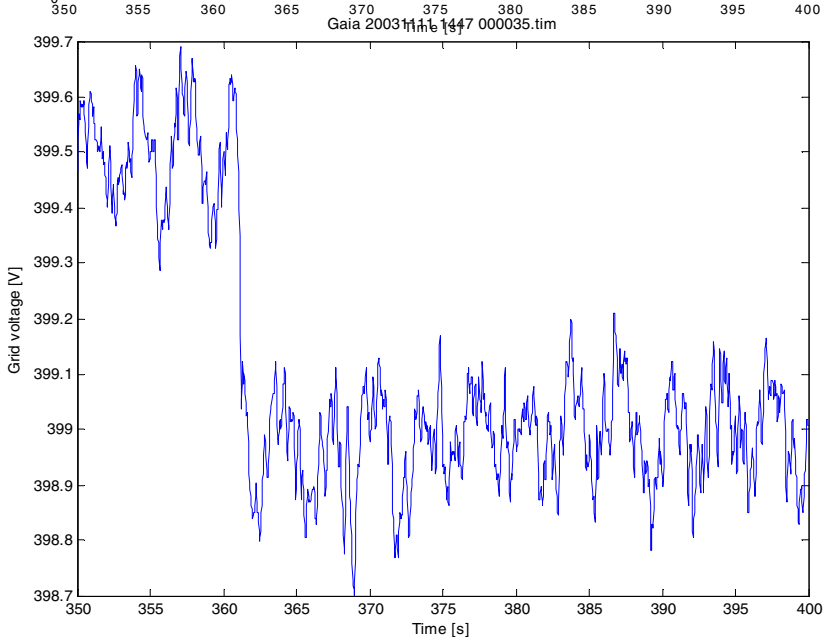

Further developments

- Grid side control enhanced especially genset behaviour
- Addition of storage in dc-link
- Power System controller

Conclusion

- A standard wind turbine has been developed for stand alone use
- Prototype has been build and tested
- The test results shows that it is capable of good control frequency and voltage
- System will be further developed to include storage and to be a power system component