RENTECH, INC.

October 12, 2001

Ms. Linda Bluestein
Program Manager
Alternative Fuels Transportation Program
United States Department of Energy
EE-34
1000 Independence Avenue, SW
Washington, D.C. 20585

Dear Ms. Bluestein:

Please find attached our responses to your letter of August 23, 2001 wherein you pose certain Petition Reviewer's Questions, which questions relate to our petition for rulemaking for alternative fuel designation filed with DOE July 1999. It must be noted that your August 23 letter is the first written notice we have received from DOE in over two years that Rentech's petition is still an active petition.

Rentech is a technology supplier. The project owners that employ our technology, will be the actual fuel suppliers as a developer of Fischer-Tropsch Diesel (FTD) projects. However, it is clearly in our interest to support and petition the DOE to adopt FTD as an "alternative fuel".

We believe that all Fischer-Tropsch technologies produce similar fuels. For this reason, we would recommend that the DOE consider adopting an FTD fuel specification rather than approve each FTD from each facility that may produce fuel around the world. This approach seems to us to be much more efficient. To address DOE's apparent concern regarding GHG emissions and efficiencies of conversion, we suggest that minimum plant efficiency be defined and adopted as part of its "alternative fuels" rulemaking. In this regard, we have recommended the fuels specifications and minimum plant efficiency criteria in our answers to your Petition Reviewer's Questions.

We are somewhat confused by the Reviewer's Questions, but nevertheless made a good faith effort to be responsive. We have submitted sufficient data that Fischer-Tropsch Diesel (FTD) fuel meets the three "alternative fuel" criteria under the U. S. Energy Policy Act of 1992; that it 1) is substantially non-petroleum; 2) would yield substantial energy security benefits; and 3) would yield substantial environmental benefits.

1331 17th Street, Suite 720, Denver, Colorado 80202 • 303/298-8008 • FAX 303/298-8010

Since our petition was filed in July, 1999, Congress amended "alternative fuel" to include "liquid fuels from domestically produced natural gas" and thus in our view negated any need for a rulemaking with respect to GTL fuel from domestic natural gas. The definition of "alternative fuel" also includes "coal-derived liquid fuels". This would likewise seem to remove FTD from coal from proper consideration in a petition for rulemaking. For these reasons, Rentech is petitioning for alternative fuel designation specifically for FTD produced from non-domestic natural gas sources. We would appreciate the opportunity to discuss your interpretation of the intent of Congress with a view toward making this process easier on all of us.

We look forward to the swift completion of the consideration of our petition so as to facilitate the introduction and distribution of this alternative fuel to promote U.S. energy security and environmental protection. We look forward to working with you and your team in an effort to realize the goals of the President's National Energy Policy.

Should you have any questions please contact me.

Best regards,

RENTECH, INC.

Richard Sheppard
Director for GTL Marketing

PETITION REVIEWER'S QUESTIONS

1. ***FTD Feedstocks.*** *Among the various feedstocks cited by Rentech (coal, petroleum refinery bottoms, natural gas), which one(s) is(are) the feedstock(s) Rentech is proposing for this petition? The choice of feedstocks will certainly have energy and emission impacts on FTD production. If Rentech is petitioning for all the feedstocks, energy and emission impacts need to be assessed for all.*

   Rentech's petition is for the designation of our GTL fuel from non-domestic natural gas resources.

   GTL fuels from domestic natural gas resources is an "Alternative Fuel" as designated and defined in HR 12274, December 15, 2000. We believe that this is quit clear and needs no further clarifications.

   GTL Fuel from coal as a feedstock is also designated as "Alternative Fuel" and clearly defined in EPACT. In Public Law 102-486 October 1992, section 301 Definitions "coal-derived liquid fuels" are defined as "alternative fuels".

   So for our Petition we are asking that non-domestic natural gas be the feedstock. Should DOE not consider GTL from domestic natural gas or liquid FT fuels from coal "alternative fuels" please clearly state this in a written response.

PETITION REVIEWER'S QUESTIONS

2. ***Syngas Production Technology.*** *Among the three syngas production technologies (SMR, POX, and ATR), which one is the technology (and for which feedstock) to be used by Rentech in its designs? This will have different energy and emission impacts for FTD production.*

Rentech provides the Fischer-Tropsch Technology for the conversion of synthesis gas to FT Liquids. The selection of the appropriate synthesis gas technology is dependent on many factors, such as: feedstock, feedstock quality, local conditions, need for power export, need for hydrogen export, plus the desires of the plant owner and licensee. The plant owner will make the ultimate decision on what synthesis technology they will incorporate and that will be a combination of what provides the best combination of efficiency, capital and operating costs for their specific project. To assist DOE in evaluation of the technology, we have attached typical flow sheets for synthesis gas production from Steam Methane Reformer (SMR), and Gas Heat Reformer (GHR). The GHR is similar to Pox and ATR results.

PETITION REVIEWER'S QUESTIONS

3. ***Discussion of Natural Gas to FTD (p. 2-3).*** *While Rentech maintains its intention of petitioning FTD from several feedstocks, the discussion here implies that this petition is intended for natural gas-based FTD. Please clarify the petition coverage clearly and conduct analysis according to the intended petition coverage.*

   Please see the clarification to this question in question number 1 of this response.

PETITION REVIEWER'S QUESTIONS

4. ***Fuel Properties.*** *The following fuel properties are needed for Rentech FTD and naphtha:*

   a. *Sulfur content by weight*
   b. *Carbon content by weight*
   c. *Heat content (both HHV and LHV, Btu/gal)*
   d. *Density (kg/liter or grams/gallon)*

   Some of the fuel properties presented by Rentech are based on tests conducted by CARB in 1984. These tests may be out of date. Please provide updated information.

   Also, fuel properties need to be presented for FTD and naphtha that are produced from coal, natural gas, refinery bottoms, and other feedstocks that Rentech intends to include in this petition.

   We are petitioning DOE for FTD fuel as a whole to be classified as an "alternative fuel" under EPACT. We believe that a specific fuel analysis for a batch of FTD under specific conditions being classified as an alternative fuel would be too specific and not serve the intent of EPACT to get alternative fuels adopted. Therefore, we would propose the following general specifications be adopted for FTD fuels. (See attached "Fuel Specifications and Recommended FTD Specifications.") Rentech FTD fuels exceed these general specifications, as do most other FTD made from various technologies in the market. It must also be noted that these specifications exceed all current or proposed worldwide fuel specifications, such as the EPA's ULSD standards for 2006.

   FTD from coal or domestic natural gas all comes within these ranges of specifications.

PETITION REVIEWER'S QUESTIONS

5. ***GHG Emission Impacts.*** *Rentech simply cites the study by Mitretek, which was based on FTD production designs that could be different from Rentech's design. Also, the coal-to-FTD pathway that Mitretek evaluated may not be economically practical at present. In any event, the Mitretek results are irrelevant to Rentech technologies and fuels. A GHG emission analysis with Rentech's own design data is needed.*

   Questions 5 and 6 are similar, and we refer to the attached typical flow sheets in response to Question 2 of this response.

   The fact that a plant or process is or is not economical at this time should be determined by those risking capital and has little relevance when evaluating this Petition. We are unclear as to why economics or projects play a role in this petition.

PETITION REVIEWER'S QUESTIONS

6. FTD Production CO_2 Emissions. *"An analysis of the net carbon dioxide emissions used to produce a gallon of Rentech's F-T diesel fuel shows a positive balance and a net decrease in carbon dioxide emissions over that for the production of conventional diesel fuel." (page 8) Please provide technical support for this statement.*

Questions 5 and 6 are similar, and we refer to the attached typical flow sheets in response to Question 2 of this response.

PETITION REVIEWER'S QUESTIONS

7. ***Energy Conversion Efficiency.*** *Based on the data on Page 8 (10 mmBtu of feedstock to produce a barrel of clean diesel), we calculate that the Rentech technology has an energy conversion efficiency of 58.7%. Please explicitly present energy and carbon efficiency of Rentech FTD design.*

Energy conversion efficiency will vary with the gas composition, process flow configuration, altitude of the plant site, and many other factors as does the efficiency of power plants, petroleum refineries, CNG facilities, methanol and ethanol plants. As a general rule of thumb, it has been used by the industry that FTD requires 10mmBtu of natural gas. However, as we model potential project and process flow configurations, we see a range of energy efficiencies from a high of 11.2mmBTU per barrel to low 8.6mmBtu per barrel of liquids. Again, these general numbers must be carefully evaluated and defined as plant liquids that can be captured for sale at ambient conditions for the plant. Many technology companies claim great efficiencies but include products that cannot be captured or are gases such as C_2's and C_3's.

Rentech would suggest that DOE adopt a definition of alternative fuel that includes a minimum conversion efficiency based on a common definition of how that efficiency is calculated. Our recommendation for that is a minimum of 11.5mmBtu per barrel of recoverable liquid product C_5 and above. This will provide a minimum efficiency level that DOE can use in their discussions and analysis. This will also eliminate DOE having to get involved with each worldwide project and evaluate the process flow sheets and configurations and then policing the projects.

PETITION REVIEWER'S QUESTIONS

8. ***CARB 1984 Study.*** *Please comment on why the CARB study was used in the petition. The study by CARB with Rentech fuels in 1984 may be out of date and my have less relevancy to this petition.*

California Air Resources Board (CARB) uses United States Environmental Protection Agency (USEPA) certified tests. We felt that United States Department of Energy (USDOE) would recognize the testing done by both CARB and EPA and did not realize that CARB and EPA test are date stamped and can not be recognized by the USDOE.

Please, in writing, explain what procedures we need to use, by what agencies and certified testing facilities and under what date structure are acceptable to USDOE.

Rentech has been a strong proponent of FT diesel for over twenty years. The 1984 tests show clearly that the test done then and those run today, that are published, show similar significant reductions in emissions. The fact that DOE is questioning the results is of concern. Is DOE trying to argue that FT diesel does not show significant emissions reductions or that DOE needs more time and budget to continue testing?

PETITION REVIEWER'S QUESTIONS

9. ***Values of Input and Output Items.*** *In the Rentech presentation to California Energy Commission, Rentech presented a flowchart of its FT process. Quantitative values for the input and out put items in this flowchart are needed for Argonne to conduct a quantitative analysis of energy and emission impacts of Rentech FTD. In particular, we'd like to have:*

   a. *The amount of natural gas input*

   b. *The amount of oxygen input, and the energy use per unit of oxygen produced for Rentech process*

   c. *The amount of electricity exported*

   d. *The amount of naphtha produced*

   e. *The amount of clean diesel produced*

   f. *The amount of wax produced*

   Preferably, the amount of inputs and outputs may be presented in per hour or per day basis.

   See Flow Sheets in response to Question 2 of this questionnaire.

PETITION REVIEWER'S QUESTIONS

10. ***References.*** *The references Rentech presented in its petition are mostly open literature for FTD in general, not for Rentech FTD in particular. What is the value of including this open literature?*

The value of providing the references was simply to demonstrate to DOE that Fischer-Tropsch Diesel (FTD) continues to be tested and studied buy many organizations and groups. All the papers and testing have similar results that FTD is very clean and significantly reduces emissions. One would hope that DOE would see the benefits to FT diesel, the similarities of FTD analysis and testing results. Also recognize that the three criteria for the Secretary to declare FTD as an "alternative fuel" have been clearly shown not only by Rentech as well as by many others, including DOE, in independent testing. We had hoped that this would decrease the questions and the time for DOE to act on the petition considering the background and testing that has been carried out on this ultra clean fuel.

PETITION REVIEWER'S QUESTIONS

11. *Provide a definition for each gas-to-liquid fuel formulation covered in the petition. Provide fuel properties and emission results for testing performed on the formulations.*

See attached Fuel Specifications and Recommended FTD Specifications.

PETITION REVIEWER'S QUESTIONS

12. *What is the aromatic, olefinic, and paraffinic content of Rentech diesel by ASTM D5291 or equivalent method?*

See attached Fuel Specifications.

PETITION REVIEWER'S QUESTIONS

13. *What are the physical and chemical property specifications for Rentech diesel?*

See attached Fuel Specifications and Recommended FTD Specifications.

PETITION REVIEWER'S QUESTIONS

14. *Are results available for the biodegradability of Rentech diesel per ASTM E1720-95 or equivalent method (OECD method 209 or Pseudomonas putida Growth Inhibition Test)?*

Not at this time. However, tests are scheduled for later this year.

PETITION REVIEWER'S QUESTIONS

15. *Does MSDS type information exist regarding exposure information for Rentech diesel (for example oral acute toxicity, eye irritation, skin irritation, and bioaccumulation)?*

Yes, MSDS type information exists for Rentech FTD.

PETITION REVIEWER'S QUESTIONS

16. *The petition gives a batch analysis of the Rentech diesel with the emissions test results. Is the analysis typical of the Rentech diesel covered in the petition? If not, which fuel properties may vary? How much can the fuel properties vary from the results given in the batch analysis in the petition?*

All diesel analysis is batch analysis, and yes all fuels, including commercial diesel, will vary in analysis. We suggest that the DOE consider defining FTD with a range of specifications and our fuels will fall into those ranges.

See our Fuel Specifications and Recommended FTD Specifications attached.

PETITION REVIEWER'S QUESTIONS

17. *Provide the oxygen content, in percent, of the Rentech diesel.*

Oxygen content for the FTD that is being considered for "alternative fuel" status is <1%.

See attached Fuel Specifications and Recommended FTD Specifications.

SMR FLOWSHEET

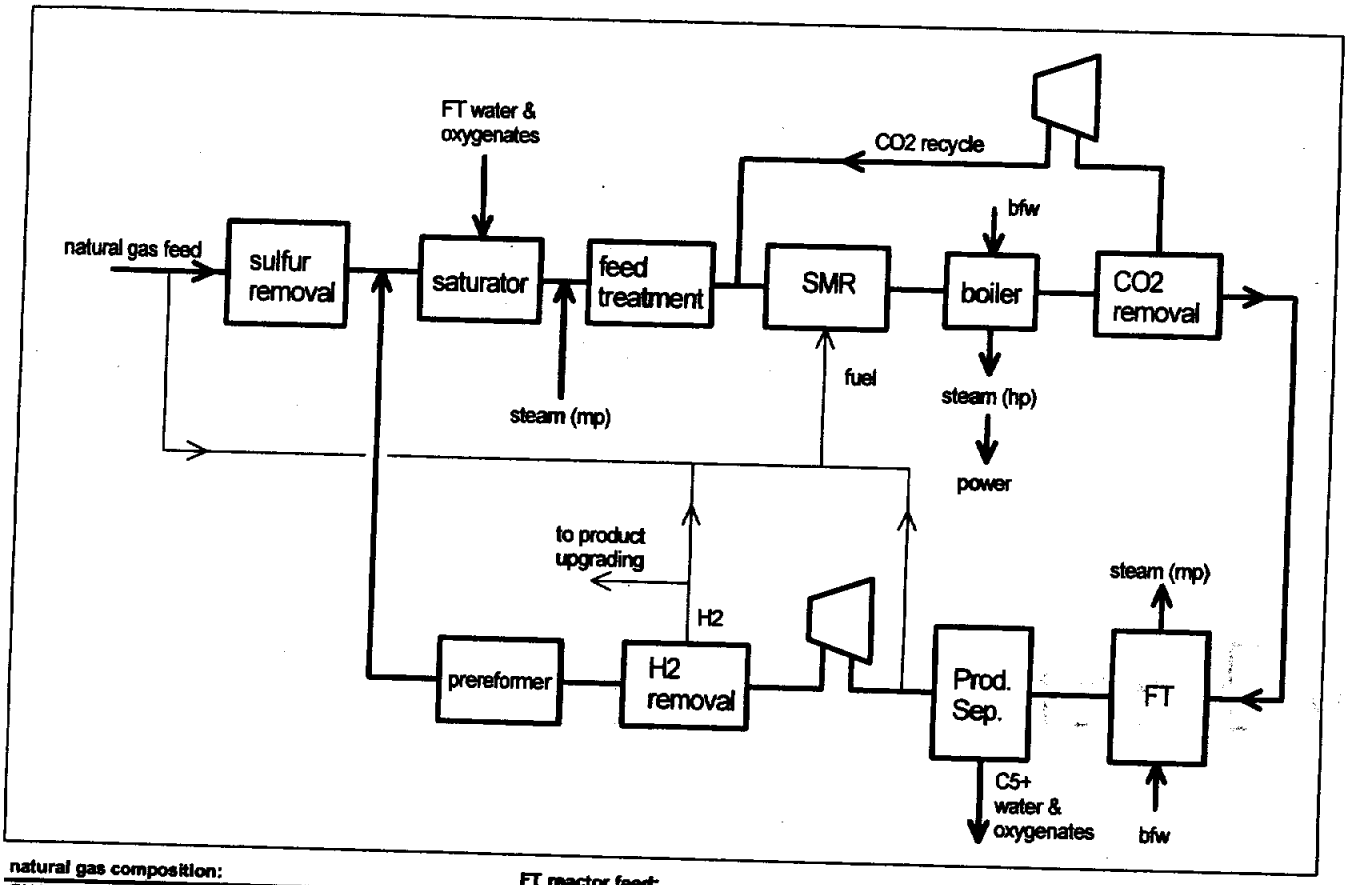

natural gas composition:

CH4	94.60%
C2H6	0.50%
C3H8	0.02%
N2	2.88%
CO2	2.00%
total	100.00%
BTU/SCF	869

natural gas distribution:

to process	89 MMSCFD
to fuel	42 MMSCFD
total	131 MMSCFD
feed energy	113926 MMBTUD

NOTE: all BTU are LHV
10/15/01 9:35

FT reactor feed:

H2:CO	1.50
CO2	4.0%
inerts	8.4%
flow	495 MMSCFD

FT products:

naphtha (C5-C9)	3048 bpd
diesel (C10-C19)	7608 bpd
total C5+	10656 bpd
energy content	5.3 MMBTU/bbl

byproducts:

electricity	69194 hp

efficiencies

energy consumption	10.69 MMBTU/bbl
energy efficiency	49.6% (product only)
net energy efficiency	55.4% (inc. power)
carbon efficiency	62.8% (exc CO2 in feed)

emissions

NMHC	2.9 gm/MMBTU C5+
CO	40.4
NOx	34.5
CO2	47719
CH4	1.2
N2O	0.3

Typical Rentech Product Analysis

Recommended FT Diesel Standards for "Alternative Fuel" Designation from Non-Domestic NG

F-T Diesel Fuel Specifications

Cetane index	67	>60
Sulfur ppm	<0.001*	< 5 ppm
Aromatic wt.%	<0.001*	<0.05
Copper Strip Corrosion	1a	1a
90% Distillation ^{0} F	571	540 - 640
Viscosity @ 40°C cSt	1.96	1.9 - 4.1
Conradson Carbon on 10% wt.%	<0.001%*	< 0.35
Ash wt%	<0.001%*	<0.001%
Flash Point °F	166	>125
Heat of Combustion BTU/lb. (gross value)	20,573	>18,000
Carbon Content		
Oxygen Content		<1%
GTL Process Efficiency		<11.5mmBtu per barrel
Lubricity ASTM D-6079(HFRR)		<675

* Analysis were below limits of detection

Rentech Inc.
1331 17th Street Suite 720
Denver , Colorado 80202
(303) 298-8008

Rentech Inc.
1331 17th Street Suite 720
Denver , Colorado 80202
(303) 298-8008