THE SOLAR DECATHLON

ACCESSIBILITY GUIDELINES

Sponsored By:

U.S. Department of Energy
National Renewable Energy Laboratory
BP Solar
American Institute of Architects

Acknowledgement

The Accessibility requirements reported in this document are excerpts from the **ADA Accessibility Guidelines for Buildings and Facilities (ADAAG)** as amended through January 1998. Certain sections or portions of sections that are not directly relevant to the scope of this competition have been omitted. A full copy of the guidelines is available at http://www.access-board.gov/adaag/html/adaag.htm

Introduction

For the purposes of this Solar Decathlon competition, teams are required to provide, as a minimum, an "Accessible Route" available during public tours, from their lot line into and within their units (see figure A).

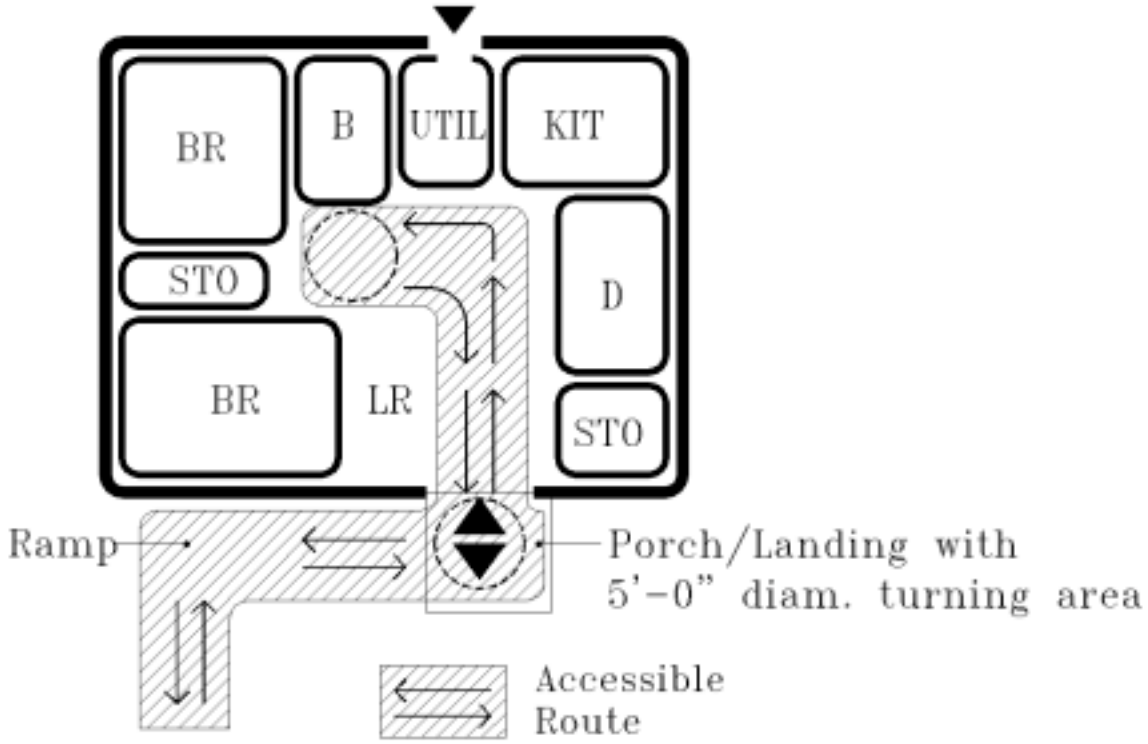

Figure (A)
This diagram is intended only to provide graphic depiction of a possible accessible route into and within a unit. It is not intended to represent any direction or recommendation for the plan layout of a unit.

Areas within the units which are not intended to be accessible, should be “roped” off, or provided with some sort of barrier to protect access during public tour times. If an area is isolated from public access, it need not comply with the requirements of these Guidelines.

The **“Basic Requirements”** portion of these Guidelines describes the criteria for providing the “Accessible Route” discussed earlier.

The **“Appendix”** portion of these Guidelines is included to provide compliance criteria in verbal and graphic form for Design Teams who desire to provide public access to other spaces within the units in addition to the required “Accessible Route,” such as bathrooms, kitchens, utility areas, etc.

Compliance with Accessibility Guidelines for facilities outside the unit lot lines including, but not limited to, the following:

- Parking
- Toilet Facilities
- Water Fountains
- Display
- Telephone
- ATM’s
- Etc.

is not the responsibility of the contestants.

Basic Requirements

Providing an “Accessible Route” into and within the unit will consist of implementing the following criteria into the design.

1. The anticipated maximum height above grade for the unit from grade elevation is 24 inches. This will minimize ramp and stair construction.

2. The “Accessible Route” must allow the passing of wheelchairs in each direction (fig. 2), or a one way loop must be provided which would allow a narrower route (fig. 1.) Accessible route must comply with Section 4.3 of the Guidelines.

Figure 1

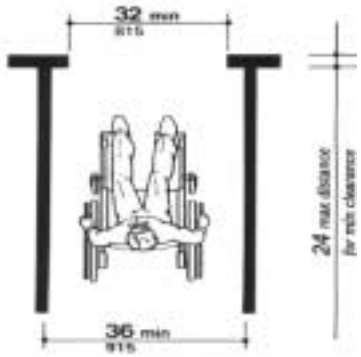

Figure 2

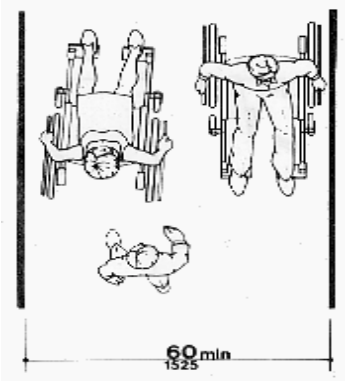

3. Objects protruding into the Accessible Route must comply with Section 4.4 of the Guidelines (figures 8a, 8b, 8c & 8d.)

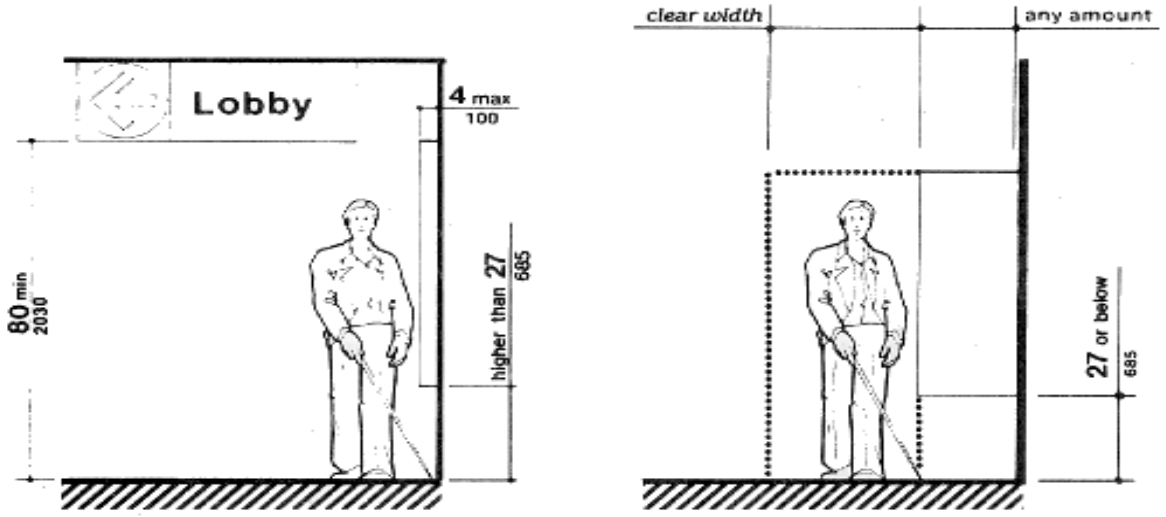

Figure 8a

Figure 8b

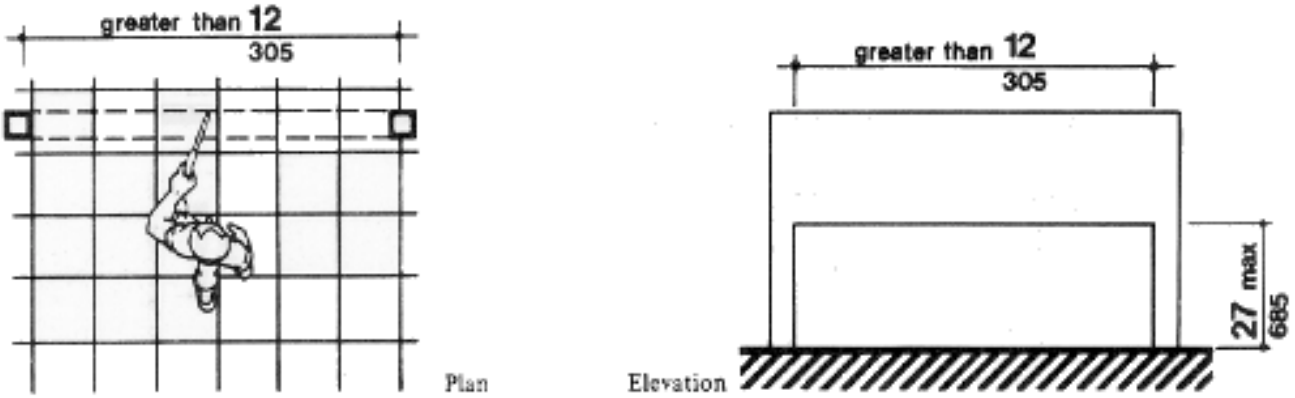

Figure 8c

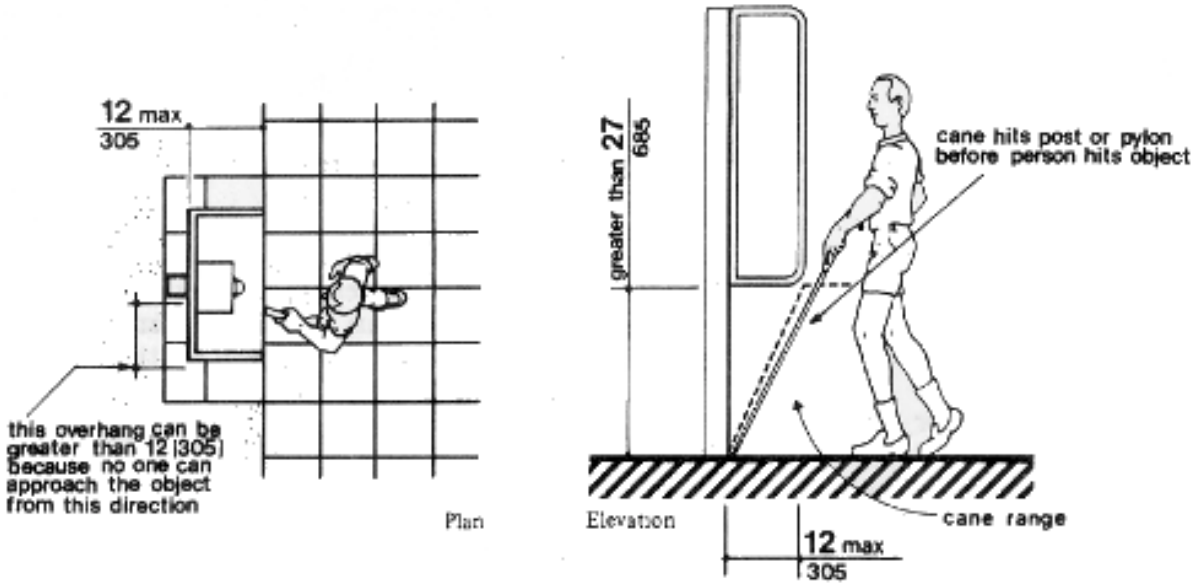

Figure 8d

4. Ground and Floor Surface along the Accessible Route must comply with Section 4.5 of the Guidelines (figures 7c&d.)

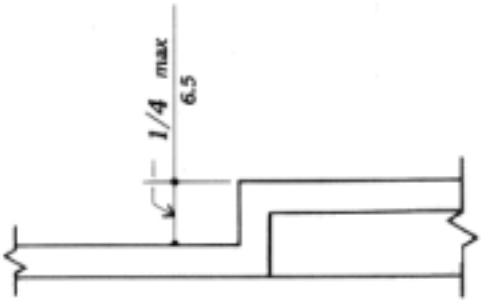

Figure 7c

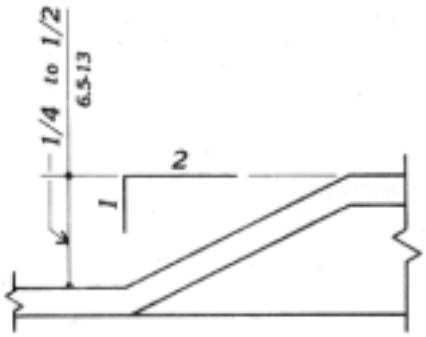

Figure 7d

5. Ramps, as defined as any part of an Accessible Route with a slope greater than 1:20, shall comply with Section 4.8 of the Guidelines, in all respects including:

- Slope and Rise
- Clear width
- Landings
- Handrails
- Cross Slope and Surfaces
- Edge Protection
- Outdoor Conditions

6. Stairs when required to be accessible by Section 4.1, shall comply with Section 4.9 of the Guidelines in all respects including:

- Treads and risers
- Nosings
- Handrails

(figures 18, 19c & 19d.)

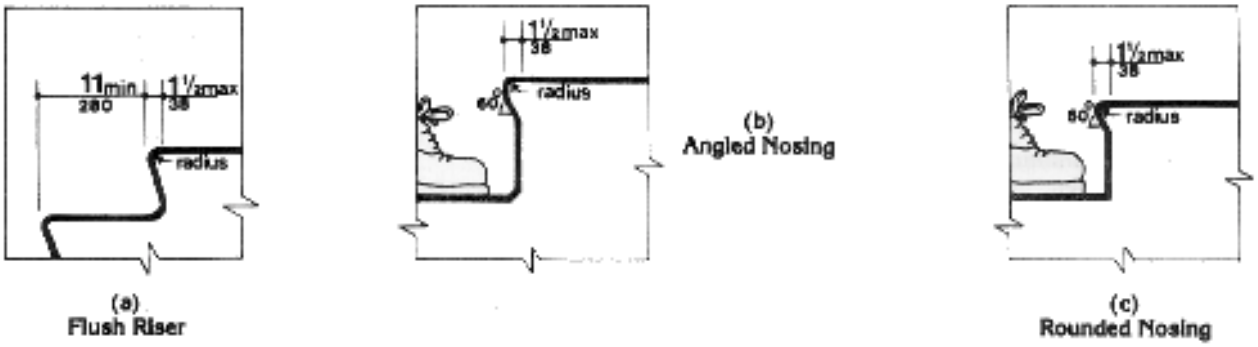

Figure 18

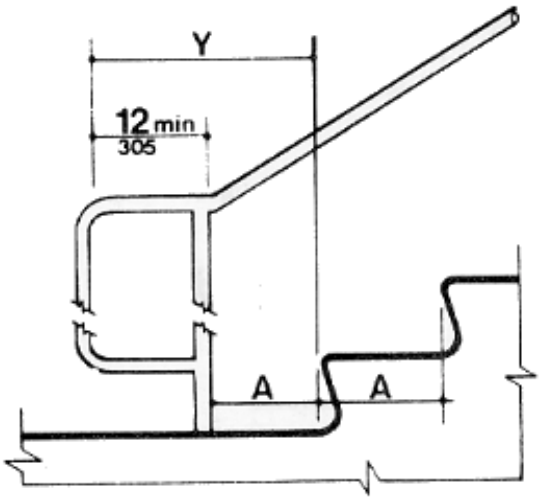

Figure 19c

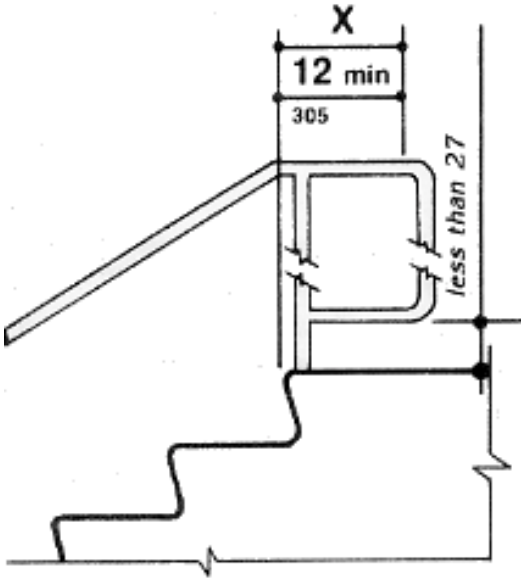

Figure 19d

7. Doors along the Accessible Route shall comply with Section 4.13 of the Guidelines in all respects including:
    - Clear Width
    - Maneuvering Clearances
    - Thresholds
    - Hardware
    - Opening Force

(figures 24, 25, & 26.)

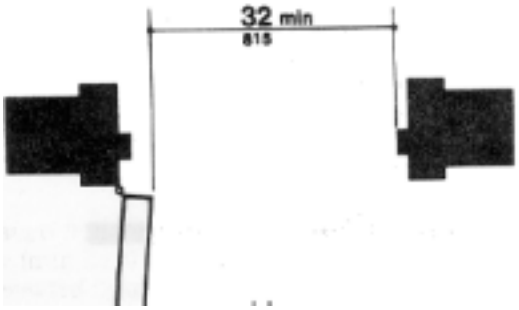

Figure 24a

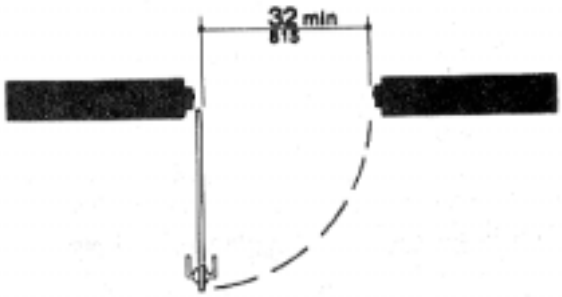

Figure 24b

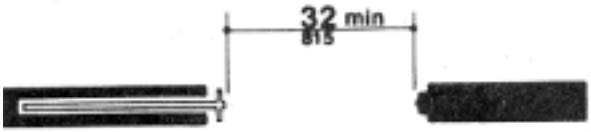

Figure 24c

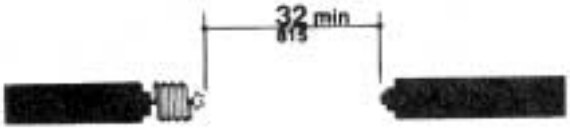

Figure 24d

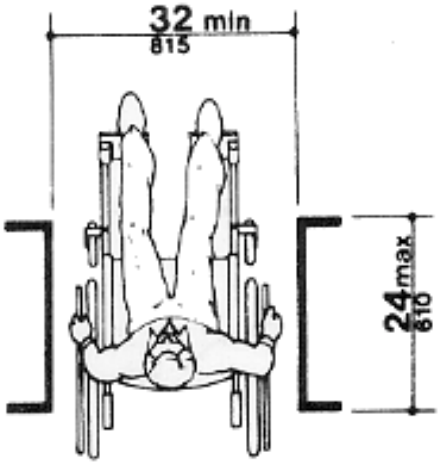

Figure 24e

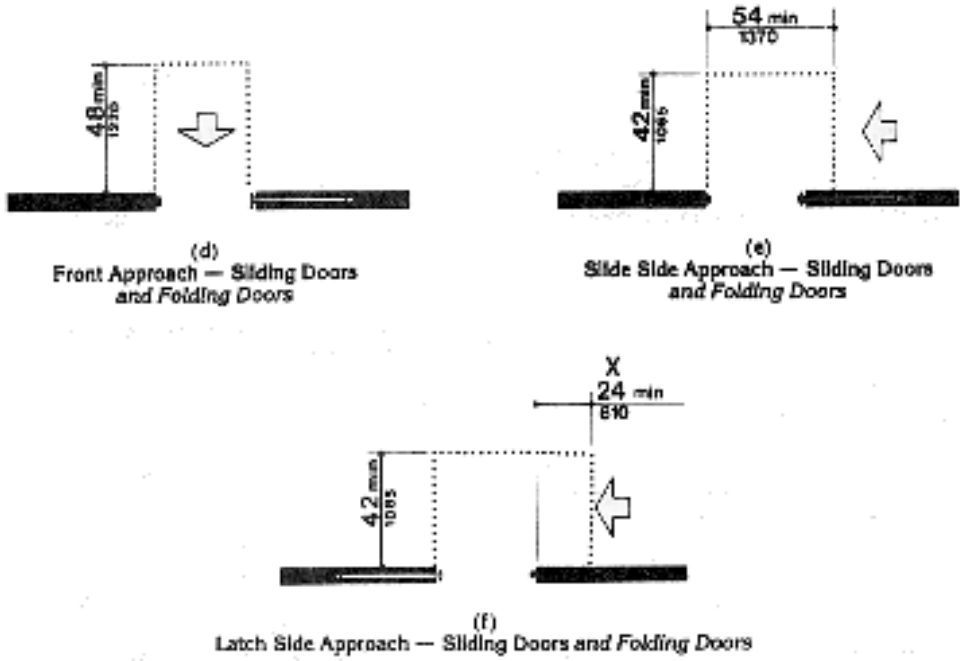

Figure 25

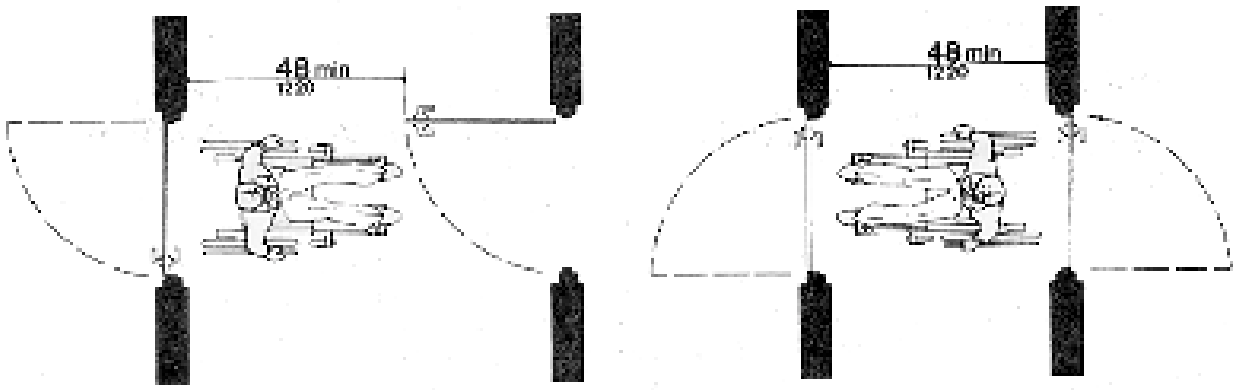

Figure 26

8. Signage along the Accessible Route, if an interactive part of the tour/display, shall comply with Section 4.30 of the Guidelines.

Appendix

4.1.2 Accessible Sites and Exterior Facilities: New Construction. An accessible site shall meet the following minimum requirements:
(1) At least one accessible route complying with 4.3 shall be provided within the boundary of the site from public transportation stops, accessible parking spaces, passenger loading zones if provided, and public streets or sidewalks, to an accessible building entrance.
(2) At least one accessible route complying with 4.3 shall connect accessible buildings, accessible facilities, accessible elements, and accessible spaces that are on the same site.
(3) All objects that protrude from surfaces or posts into circulation paths shall comply with 4.4.
(4) Ground surfaces along accessible routes and in accessible spaces shall comply with 4.5.

4.1.3 Accessible Buildings: New Construction. Accessible buildings and facilities shall meet the following minimum requirements:
(1) At least one accessible route complying with 4.3 shall connect accessible building or facility entrances with all accessible spaces and elements within the building or facility.
(2) All objects that overhang or protrude into circulation paths shall comply with 4.4.
(3) Ground and floor surfaces along accessible routes and in accessible rooms and spaces shall comply with 4.5.
(4) Interior and exterior stairs connecting levels that are not connected by an elevator, ramp, or other accessible means of vertical access shall comply with 4.9.
(7) Doors:
- (a) At each accessible entrance to a building or facility, at least one door shall comply with 4.13.
- (b) Within a building or facility, at least one door at each accessible space shall comply with 4.13.
- (c) Each door that is an element of an accessible route shall comply with 4.13.
- (d) Each door required by 4.3.10, Egress, shall comply with 4.13.

(9)* In buildings or facilities, or portions of buildings or facilities, required to be accessible, accessible means of egress shall be provided in the same number as required for exits by local building/life safety regulations.
(13) Controls and operating mechanisms in accessible spaces, along accessible routes, or as parts of accessible elements (for example, light switches and dispenser controls) shall comply with 4.27.
(14) If emergency warning systems are provided, then they shall include both audible alarms and visual alarms complying with 4.28.
(15) Detectable warnings shall be provided at locations as specified in 4.29.

4.2 Space Allowance and Reach Ranges.

4.2.1* **Wheelchair Passage Width.** The minimum clear width for single wheelchair passage shall be 32 in (815 mm) at a point and 36 in (915 mm) continuously (see Fig. 1 and 24(e)).
4.2.2 **Width for Wheelchair Passing.** The minimum width for two wheelchairs to pass is 60 in (1525 mm) (see Fig. 2).
4.2.3* **Wheelchair Turning Space.** The space required for a wheelchair to make a 180-degree turn is a clear space of 60 in (1525 mm) diameter (see Fig. 3(a)) or a T-shaped space (see Fig. 3(b)).
4.2.4* **Clear Floor or Ground Space for Wheelchairs**.
4.2.4.1 Size and Approach. The minimum clear floor or ground space required to accommodate a single, stationary wheelchair and occupant is 30 in by 48 in (760 mm by 1220 mm) (see Fig. 4(a)). The minimum clear floor or ground space for wheelchairs may be positioned for forward or parallel approach to an object (see Fig. 4(b) and (c)). Clear floor or ground space for wheelchairs may be part of the knee space required under some objects.
4.2.4.2 Relationship of Maneuvering Clearance to Wheelchair Spaces. One full unobstructed side of the clear floor or ground space for a wheelchair shall adjoin or overlap an accessible route or adjoin another wheelchair clear floor space. If a clear floor space is located in an alcove or otherwise confined on all or part of three sides, additional maneuvering clearances shall be provided as shown in Fig. 4(d) and (e).
4.2.4.3 Surfaces for Wheelchair Spaces. Clear floor or ground spaces for wheelchairs shall comply with 4.5.
4.2.5* **Forward Reach.** If the clear floor space only allows forward approach to an object, the maximum high forward reach allowed shall be 48 in (1220 mm) (see Fig. 5(a)). The minimum low forward reach is 15 in (380 mm). If the high forward reach is over an obstruction, reach and clearances shall be as shown in Fig. 5(b).
4.2.6* **Side Reach**. If the clear floor space allows parallel approach by a person in a wheelchair, the maximum high side reach allowed shall be 54 in (1370 mm) and the low side reach shall be no less than 9 in (230 mm) above the floor (Fig. 6(a) and (b)). If the side reach is over an obstruction, the reach and clearances shall be as shown in Fig 6(c).

4.3 Accessible Route.

4.3.1* **General.** All walks, halls, corridors, aisles, skywalks, tunnels, and other spaces that are part of an accessible route shall comply with 4.3.
4.3.2 **Location.**

(1) At least one accessible route within the boundary of the site shall be provided from public transportation stops, accessible parking, and accessible passenger loading zones, and public streets or sidewalks to the accessible building entrance they serve. The accessible route shall, to the maximum extent feasible, coincide with the route for the general public.

(2) At least one accessible route shall connect accessible buildings, facilities, elements, and spaces that are on the same site.

(3) At least one accessible route shall connect accessible building or facility entrances with all accessible spaces and elements and with all accessible dwelling units within the building or facility.

(4) An accessible route shall connect at least one accessible entrance of each accessible dwelling unit with those exterior and interior spaces and facilities that serve the accessible dwelling unit.

4.3.3 **Width.** The minimum clear width of an accessible route shall be 36 in (915 mm) except at doors (see 4.13.5 and 4.13.6). If a person in a wheelchair must make a turn around an obstruction, the minimum clear width of the accessible route shall be as shown in Fig. 7(a) and (b).
4.3.4 **Passing Space**. If an accessible route has less than 60 in (1525 mm) clear width, then passing spaces at least 60 in by 60 in (1525 mm by 1525 mm) shall be located at reasonable intervals not to exceed 200 ft (61 m). A T-intersection of two corridors or walks is an acceptable passing place.
4.3.5 **Head Room.** Accessible routes shall comply with 4.4.2.
4.3.6 **Surface Textures**. The surface of an accessible route shall comply with 4.5.
4.3.7 **Slope**. An accessible route with a running slope greater than 1:20 is a ramp and shall comply with 4.8. Nowhere shall the cross slope of an accessible route exceed 1:50.
4.3.8 **Changes in Levels**. Changes in levels along an accessible route shall comply with 4.5.2. If an accessible route has changes in level greater than 1/2 in (13 mm), then a curb ramp, ramp, elevator, or platform lift (as permitted in 4.1.3 and 4.1.6) shall be provided that complies with 4.7, 4.8, 4.10, or 4.11, respectively. An accessible route does not include stairs, steps, or escalators. See definition of "egress, means of" in 3.5.
4.3.9 **Doors.** Doors along an accessible route shall comply with 4.13.
4.3.10* **Egress.** Accessible routes serving any accessible space or element shall also serve as a means of egress for emergencies or connect to an accessible area of rescue assistance.

4.4 Protruding Objects.

4.4.1* **General.** Objects projecting from walls (for example, telephones) with their leading edges between 27 in and 80 in (685 mm and 2030 mm) above the finished floor shall protrude no more than 4 in (100 mm) into walks, halls, corridors, passageways, or aisles (see Fig. 8(a)). Objects mounted with their leading edges at or below 27 in (685 mm) above the finished floor may protrude any amount (see Fig. 8(a) and (b)). Free-standing objects mounted on posts or pylons may overhang 12 in (305 mm) maximum from 27 in to 80 in (685 mm to 2030 mm) above the ground or finished floor (see Fig. 8(c) and (d)). Protruding objects shall not reduce the clear width of an accessible route or maneuvering space (see Fig. 8(e)).
4.4.2 **Head Room**. Walks, halls, corridors, passageways, aisles, or other circulation spaces shall have 80 in (2030 mm) minimum clear head room (see Fig. 8(a)). If vertical clearance of an area adjoining an accessible route is reduced to less than 80 in (nominal dimension), a barrier to warn blind or visually-impaired persons shall be provided (see Fig. 8(c-1)).

4.5 Ground and Floor Surfaces.

4.5.1* **General**. Ground and floor surfaces along accessible routes and in accessible rooms and spaces including floors, walks, ramps, stairs, and curb ramps, shall be stable, firm, slip-resistant, and shall comply with 4.5.
4.5.2 **Changes in Level**. Changes in level up to 1/4 in (6 mm) may be vertical and without edge treatment (see Fig. 7(c)). Changes in level between 1/4 in and 1/2 in (6 mm and 13 mm) shall be beveled with a

slope no greater than 1:2 (see Fig. 7(d)). Changes in level greater than 1/2 in (13 mm) shall be accomplished by means of a ramp that complies with 4.7 or 4.8.
4.5.3* **Carpet**. If carpet or carpet tile is used on a ground or floor surface, then it shall be securely attached; have a firm cushion, pad, or backing, or no cushion or pad; and have a level loop, textured loop, level cut pile, or level cut/uncut pile texture. The maximum pile thickness shall be 1/2 in (13 mm) (see Fig. 8(f)). Exposed edges of carpet shall be fastened to floor surfaces and have trim along the entire length of the exposed edge. Carpet edge trim shall comply with 4.5.2.
4.5.4 **Gratings**. If gratings are located in walking surfaces, then they shall have spaces no greater than 1/2 in (13 mm) wide in one direction (seeFig. 8(g)). If gratings have elongated openings, then they shall be placed so that the long dimension is perpendicular to the dominant direction of travel (see Fig. 8(h)).

4.8 Ramps.

4.8.1* **General**. Any part of an accessible route with a slope greater than 1:20 shall be considered a ramp and shall comply with 4.8.
4.8.2* **Slope and Rise.** The least possible slope shall be used for any ramp. The maximum slope of a ramp in new construction shall be 1:12. The maximum rise for any run shall be 30 in (760 mm) (see Fig. 16). Curb ramps and ramps to be constructed on existing sites or in existing buildings or facilities may have slopes and rises as allowed in 4.1.6(3)(a) if space limitations prohibit the use of a 1:12 slope or less.
4.8.3 **Clear Width.** The minimum clear width of a ramp shall be 36 in (915 mm).
4.8.4* **Landings.** Ramps shall have level landings at bottom and top of each ramp and each ramp run. Landings shall have the following features:

(1) The landing shall be at least as wide as the ramp run leading to it.

(2) The landing length shall be a minimum of 60 in (1525 mm) clear.

(3) If ramps change direction at landings, the minimum landing size shall be 60 in by 60 in (1525 mm by 1525 mm).

(4) If a doorway is located at a landing, then the area in front of the doorway shall comply with 4.13.6.

4.8.5* **Handrails.** If a ramp run has a rise greater than 6 in (150 mm) or a horizontal projection greater than 72 in (1830 mm), then it shall have handrails on both sides. Handrails are not required on curb ramps or adjacent to seating in assembly areas. Handrails shall comply with 4.26 and shall have the following features:

(1) Handrails shall be provided along both sides of ramp segments. The inside handrail on switchback or dogleg ramps shall always be continuous.

(2) If handrails are not continuous, they shall extend at least 12 in (305 mm) beyond the top and bottom of the ramp segment and shall be parallel with the floor or ground surface (see Fig. 17).

(3) The clear space between the handrail and the wall shall be 1 - 1/2 in (38 mm).

(4) Gripping surfaces shall be continuous.

(5) Top of handrail gripping surfaces shall be mounted between 34 in and 38 in (865 mm and 965 mm) above ramp surfaces.

(6) Ends of handrails shall be either rounded or returned smoothly to floor, wall, or post.

(7) Handrails shall not rotate within their fittings.

4.8.6 **Cross Slope and Surfaces**. The cross slope of ramp surfaces shall be no greater than 1:50. Ramp surfaces shall comply with 4.5.
4.8.7 **Edge Protection**. Ramps and landings with drop-offs shall have curbs, walls, railings, or projecting surfaces that prevent people from slipping off the ramp. Curbs shall be a minimum of 2 in (50 mm) high (see Fig. 17).
4.8.8 **Outdoor Conditions.** Outdoor ramps and their approaches shall be designed so that water will not accumulate on walking surfaces.

4.9 Stairs.

4.9.1* **Minimum Number.** Stairs required to be accessible by 4.1 shall comply with 4.9.
4.9.2 **Treads and Risers.** On any given flight of stairs, all steps shall have uniform riser heights and uniform tread widths. Stair treads shall be no less than 11 in (280 mm) wide, measured from riser to riser (see Fig. 18(a)). Open risers are not permitted.
4.9.3 **Nosings.** The undersides of nosings shall not be abrupt. The radius of curvature at the leading edge of the tread shall be no greater than 1/2 in (13 mm). Risers shall be sloped or the underside of the nosing shall have an angle not less than 60 degrees from the horizontal. Nosings shall project no more than 1-1/2 in (38 mm) (see Fig. 18).
4.9.4 **Handrails**. Stairways shall have handrails at both sides of all stairs. Handrails shall comply with 4.26 and shall have the following features:

(1) Handrails shall be continuous along both sides of stairs. The inside handrail on switchback or dogleg stairs shall always be continuous.

(2) If handrails are not continuous, they shall extend at least 12 in (305 mm) beyond the top riser and at least 12 in (305 mm) plus the width of one tread beyond the bottom riser. At the top, the extension shall be parallel with the floor or ground surface. At the bottom, the handrail shall continue to slope for a distance of the width of one tread from the bottom riser; the remainder of the extension shall be horizontal (see Fig. 19(c) and (d)). Handrail extensions shall comply with 4.4.

(3) The clear space between handrails and wall shall be 1-1/2 in (38 mm).

(4) Gripping surfaces shall be uninterrupted by newel posts, other construction elements, or obstructions.

(5) Top of handrail gripping surface shall be mounted between 34 in and 38 in (865 mm and 965 mm) above stair nosings.

(6) Ends of handrails shall be either rounded or returned smoothly to floor, wall or post.

(7) Handrails shall not rotate within their fittings.

4.9.6 **Outdoor Conditions**. Outdoor stairs and their approaches shall be designed so that water will not accumulate on walking surfaces.

4.12 Windows. (not used)

4.13 Doors.

4.13.1 **General.** Doors required to be accessible by 4.1 shall comply with the requirements of 4.13.
4.13.2 **Revolving Doors and Turnstiles.** Revolving doors or turnstiles shall not be the only means of passage at an accessible entrance or along an accessible route. An accessible gate or door shall be provided adjacent to the turnstile or revolving door and shall be so designed as to facilitate the same use pattern.
4.13.3 **Gates.** Gates, including ticket gates, shall meet all applicable specifications of 4.13.
4.13.4 **Double-Leaf Doorways**. If doorways have two independently operated door leaves, then at least one leaf shall meet the specifications in 4.13.5 and 4.13.6. That leaf shall be an active leaf.

4.13.5 **Clear Width.** Doorways shall have a minimum clear opening of 32 in (815 mm) with the door open 90 degrees, measured between the face of the door and the opposite stop (see Fig. 24(a), (b), (c), and (d)). Openings more than 24 in (610 mm) in depth shall comply with 4.2.1 and 4.3.3 (see Fig. 24(e)).

EXCEPTION: Doors not requiring full user passage, such as shallow closets, may have the clear opening reduced to 20 in (510 mm) minimum.

4.13.6 **Maneuvering Clearances at Doors**. Minimum maneuvering clearances at doors that are not automatic or power-assisted shall be as shown in Fig. 25. The floor or ground area within the required clearances shall be level and clear.

EXCEPTION: Entry doors to acute care hospital bedrooms for in-patients shall be exempted from the requirement for space at the latch side of the door (see dimension "x" in Fig. 25) if the door is at least 44 in (1120 mm) wide.

4.13.7 **Two Doors in Series.** The minimum space between two hinged or pivoted doors in series shall be 48 in (1220 mm) plus the width of any door swinging into the space. Doors in series shall swing either in the same direction or away from the space between the doors (see Fig. 26).
4.13.8* **Thresholds at Doorways**. Thresholds at doorways shall not exceed 3/4 in (19 mm) in height for exterior sliding doors or 1/2 in (13 mm) for other types of doors. Raised thresholds and floor level changes at accessible doorways shall be beveled with a slope no greater than 1:2 (see 4.5.2).
4.13.9* **Door Hardware**. Handles, pulls, latches, locks, and other operating devices on accessible doors shall have a shape that is easy to grasp with one hand and does not require tight grasping, tight pinching, or twisting of the wrist to operate. Lever-operated mechanisms, push-type mechanisms, and U-shaped handles are acceptable designs. When sliding doors are fully open, operating hardware shall be exposed

and usable from both sides. Hardware required for accessible door passage shall be mounted no higher than 48 in (1220 mm) above finished floor.
4.13.10* **Door Closers**. If a door has a closer, then the sweep period of the closer shall be adjusted so that from an open position of 70 degrees, the door will take at least 3 seconds to move to a point 3 in (75 mm) from the latch, measured to the leading edge of the door.
4.13.11* **Door Opening Force.** The maximum force for pushing or pulling open a door shall be as follows:

(1) Fire doors shall have the minimum opening force allowable by the appropriate administrative authority.

(2) Other doors.

(a) exterior hinged doors: (Reserved).
(b) interior hinged doors: 5 lbf (22.2N)
(c) sliding or folding doors: 5 lbf (22.2N)

These forces do not apply to the force required to retract latch bolts or disengage other devices that may hold the door in a closed position.

4.13.12* **Automatic Doors and Power-Assisted Doors.** If an automatic door is used, then it shall comply with **ANSI/BHMA A156.10-1985**. Slowly opening, low-powered, automatic doors shall comply with **ANSI A156.19-1984**. Such doors shall not open to back check faster than 3 seconds and shall require no more than 15 lbf (66.6N) to stop door movement. If a power-assisted door is used, its door-opening force shall comply with 4.13.11 and its closing shall conform to the requirements in **ANSI A156.19-1984**

4.16 Water Closets.

4.16.1 General. Accessible water closets shall comply with 4.16.2 through 4.16.6.

EXCEPTION: Water closets used primarily by children ages 12 and younger shall be permitted to comply with 4.16.7.

4.16.2 **Clear Floor Space**. Clear floor space for water closets not in stalls shall comply with Fig. 28. Clear floor space may be arranged to allow either a left-handed or right-handed approach.
4.16.3* **Height.** The height of water closets shall be 17 in to 19 in (430 mm to 485 mm), measured to the top of the toilet seat (see Fig. 29(b)). Seats shall not be sprung to return to a lifted position.
4.16.4* **Grab Bars**. Grab bars for water closets not located in stalls shall comply with 4.26 and Fig. 29. The grab bar behind the water closet shall be 36 in (915 mm) minimum.
4.16.5* **Flush Controls.** Flush controls shall be hand operated or automatic and shall comply with 4.27.4. Controls for flush valves shall be mounted on the wide side of toilet areas no more than 44 in (1120 mm) above the floor.

4.16.6 **Dispensers**. Toilet paper dispensers shall be installed within reach, as shown in Fig. 29(b). Dispensers that control delivery, or that do not permit continuous paper flow, shall not be used.

4.17.6 **Grab Bars**. Grab bars complying with the length and positioning shown in Fig. 30(a), (b), (c), and (d) shall be provided. Grab bars may be mounted with any desired method as long as they have a gripping surface at the locations shown and do not obstruct the required clear floor area. Grab bars shall comply with 4.26.

4.19 Lavatories and Mirrors.

4.19.1 **General.** The requirements of 4.19 shall apply to lavatory fixtures, vanities, and built-in lavatories.

4.19.2 **Height and Clearances**. Lavatories shall be mounted with the rim or counter surface no higher than 34 in (865 mm) above the finish floor. Provide a clearance of at least 29 in (735 mm) above the finish floor to the bottom of the apron. Knee and toe clearance shall comply with Fig. 31.

> EXCEPTION 1: Lavatories used primarily by children ages 6 through 12 shall be permitted to have an apron clearance and a knee clearance 24 in (610 mm) high minimum provided that the rim or counter surface is no higher than 31 in (760 mm).
> EXCEPTION 2: Lavatories used primarily by children ages 5 and younger shall not be required to meet these clearances if clear floor space for a parallel approach complying with 4.2.4 is provided.

4.19.3 **Clear Floor Space**. A clear floor space 30 in by 48 in (760 mm by 1220 mm) complying with 4.2.4 shall be provided in front of a lavatory to allow forward approach. Such clear floor space shall adjoin or overlap an accessible route and shall extend a maximum of 19 in (485 mm) underneath the lavatory (see Fig. 32).
4.19.4 **Exposed Pipes and Surfaces**. Hot water and drain pipes under lavatories shall be insulated or otherwise configured to protect against contact. There shall be no sharp or abrasive surfaces under lavatories.
4.19.5 **Faucets.** Faucets shall comply with 4.27.4. Lever-operated, push-type, and electronically controlled mechanisms are examples of acceptable designs. If self-closing valves are used the faucet shall remain open for at least 10 seconds.
4.19.6* **Mirrors.** Mirrors shall be mounted with the bottom edge of the reflecting surface no higher than 40 in (1015 mm) above the finish floor (see Fig. 31).

4.20 Bathtubs.

4.20.1 **General**. Accessible bathtubs shall comply with 4.20.
4.20.2 **Floor Space**. Clear floor space in front of bathtubs shall be as shown in Fig. 33.
4.20.3 **Seat**. An in-tub seat or a seat at the head end of the tub shall be provided as shown in Fig. 33 and 34. The structural strength of seats and their attachments shall comply with 4.26.3. Seats shall be mounted securely and shall not slip during use.
4.20.4 **Grab Bars**. Grab bars complying with 4.26 shall be provided as shown in Fig. 33 and 34.
4.20.5 **Controls.** Faucets and other controls complying with 4.27.4 shall be located as shown in Fig. 34.
4.20.6 **Shower Unit**. A shower spray unit with a hose at least 60 in (1525 mm) long that can be used both as a fixed shower head and as a hand-held shower shall be provided.

4.20.7 **Bathtub Enclosures**. If provided, enclosures for bathtubs shall not obstruct controls or transfer from wheelchairs onto bathtub seats or into tubs. Enclosures on bathtubs shall not have tracks mounted on their rims.

4.21 Shower Stalls.

4.21.1* **General**. Accessible shower stalls shall comply with 4.21.
4.21.2 **Size and Clearances**. Except as specified in 9.1.2, shower stall size and clear floor space shall comply with Fig. 35(a) or (b). The shower stall in Fig. 35(a) shall be 36 in by 36 in (915 mm by 915 mm). Shower stalls required by 9.1.2 shall comply with Fig. 57(a) or (b). The shower stall in Fig. 35(b) will fit into the space required for a bathtub.
4.21.3 **Seat.** A seat shall be provided in shower stalls 36 in by 36 in (915 mm by 915 mm) and shall be as shown in Fig. 36. The seat shall be mounted 17 in to 19 in (430 mm to 485 mm) from the bathroom floor and shall extend the full depth of the stall. In a 36 in by 36 in (915 mm by 915 mm) shower stall, the seat shall be on the wall opposite the controls. Where a fixed seat is provided in a 30 in by 60 in minimum (760 mm by 1525 mm) shower stall, it shall be a folding type and shall be mounted on the wall adjacent to the controls as shown in Fig. 57. The structural strength of seats and their attachments shall comply with 4.26.3.
4.21.4 **Grab Bars.** Grab bars complying with 4.26 shall be provided as shown in Fig. 37.
4.21.5 **Controls**. Faucets and other controls complying with 4.27.4 shall be located as shown in Fig. 37. In shower stalls 36 in by 36 in (915 mm by 915 mm), all controls, faucets, and the shower unit shall be mounted on the side wall opposite the seat.

4.21.6 **Shower Unit**. A shower spray unit with a hose at least 60 in (1525 mm) long that can be used both as a fixed shower head and as a hand-held shower shall be provided.

> EXCEPTION: In unmonitored facilities where vandalism is a consideration, a fixed shower head mounted at 48 in (1220 mm) above the shower floor may be used in lieu of a hand-held shower head.

4.21.7 **Curbs**. If provided, curbs in shower stalls 36 in by 36 in (915 mm by 915 mm) shall be no higher than 1/2 in (13 mm). Shower stalls that are 30 in by 60 in (760 mm by 1525 mm) minimum shall not have curbs.
4.21.8 **Shower Enclosures.** If provided, enclosures for shower stalls shall not obstruct controls or obstruct transfer from wheelchairs onto shower seats.

4.22 Toilet Rooms.

4.22.1 **Minimum Number**. Toilet facilities required to be accessible by 4.1 shall comply with 4.22. Accessible toilet rooms shall be on an accessible route.
4.22.2 **Doors**. All doors to accessible toilet rooms shall comply with 4.13. Doors shall not swing into the clear floor space required for any fixture.
4.22.3* **Clear Floor Space**. The accessible fixtures and controls required in 4.22.4, 4.22.5, 4.22.6, and 4.22.7 shall be on an accessible route. An unobstructed turning space complying with 4.2.3 shall be provided within an accessible toilet room. The clear floor space at fixtures and controls, the accessible route, and the turning space may overlap.

4.22.4 **Water Closets.** If toilet stalls are provided, then at least one shall be a standard toilet stall complying with 4.17; where 6 or more stalls are provided, in addition to the stall complying with 4.17.3, at least one stall 36 in (915 mm) wide with an outward swinging, self-closing door and parallel grab bars complying with Fig. 30(d) and 4.26 shall be provided. Water closets in such stalls shall comply with 4.16. If water closets are not in stalls, then at least one shall comply with 4.16.
4.22.5 **Urinals.** If urinals are provided, then at least one shall comply with 4.18.
4.22.6 **Lavatories and Mirrors.** If lavatories and mirrors are provided, then at least one of each shall comply with 4.19.
4.22.7 **Controls and Dispensers.** If controls, dispensers, receptacles, or other equipment are provided, then at least one of each shall be on an accessible route and shall comply with 4.27.

4.23 Bathrooms, Bathing Facilities and Shower Rooms

4.23.9* **Medicine Cabinets**. If medicine cabinets are provided, at least one shall be located with a usable shelf no higher than 44 in (1120 mm) above the floor space. The floor space shall comply with 4.2.4.

4.24 Sinks.

4.24.1 **General**. Sinks required to be accessible by 4.1 shall comply with 4.24.
4.24.2 **Height.** Sinks shall be mounted with the counter or rim no higher than 34 in (865 mm) above the finish floor.

4.24.3 Knee Clearance. Knee clearance that is at least 27 in (685 mm) high, 30 in (760 mm) wide, and 19 in (485 mm) deep shall be provided underneath sinks.

> EXCEPTION 1: Sinks used primarily by children ages 6 through 12 shall be permitted to have a knee clearance 24 in (610 mm) high minimum provided that the rim or counter surface is no higher than 31 in (760 mm).
> EXCEPTION 2: Sinks used primarily by children ages 5 and younger shall not be required to provide knee clearance if clear floor space for a parallel approach complying with 4.2.4 is provided

4.24.4 **Depth**. Each sink shall be a maximum of 6-1/2 in (165 mm) deep.
4.24.5 **Clear Floor Space.** A clear floor space at least 30 in by 48 in (760 mm by 1220 mm) complying with 4.2.4 shall be provided in front of a sink to allow forward approach. The clear floor space shall be on an accessible route and shall extend a maximum of 19 in (485 mm) underneath the sink (see Fig. 32).
4.24.6 **Exposed Pipes and Surfaces**. Hot water and drain pipes exposed under sinks shall be insulate or otherwise configured so as to protect against contact. There shall be no sharp or abrasive surfaces under sinks.
4.24.7 **Faucets**. Faucets shall comply with 4.27.4. Lever-operated, push-type, touch-type, or electronically controlled mechanisms are acceptable designs.

4.25 Storage.

4.25.1 **General.** Fixed storage facilities such as cabinets, shelves, closets, and drawers required to be accessible by 4.1 shall comply with 4.25.

4.25.2 **Clear Floor Space.** A clear floor space at least 30 in by 48 in (760 mm by 1220 mm) complying with 4.2.4 that allows either a forward or parallel approach by a person using a wheelchair shall be provided at accessible storage facilities.
4.25.3* **Height.** Accessible storage spaces shall be within at least one of the reach ranges specified in 4.2.5 and 4.2.6 (see Fig. 5 and Fig 6). Clothes rods or shelves shall be a maximum of 54 in (1370 mm) above the finish floor for a side approach. Where the distance from the wheelchair to the clothes rod or shelf exceeds 10 in (255 mm) (as in closets without accessible doors) the height and depth to the rod or shelf shall comply with Fig. 38(a) and Fig. 38(b).
4.25.4 **Hardware**. Hardware for accessible storage facilities shall comply with 4.27.4. Touch latches and U-shaped pulls are acceptable.

4.26 Handrails, Grab Bars, and Tub and Shower Seats.

4.26.1* **General.** All handrails, grab bars, and tub and shower seats required to be accessible by 4.1, 4.8, 4.9, 4.16, 4.17, 4.20 or 4.21 shall comply with 4.26.
4.26.2* **Size and Spacing of Grab Bars and Handrails**. The diameter or width of the gripping surfaces of a handrail or grab bar shall be 1-1/4 in to 1-1/2 in (32 mm to 38 mm), or the shape shall provide an equivalent gripping surface. If handrails or grab bars are mounted adjacent to a wall, the space between the wall and the grab bar shall be 1-1/2 in (38 mm) (see Fig. 39(a), (b), and (e)).
4.26.3 **Structural Strength.** The structural strength of grab bars, tub and shower seats, fasteners, and mounting devices shall meet the following specification:

(1) Bending stress in a grab bar or seat induced by the maximum bending moment from the application of 250 lbf (1112N) shall be less than the allowable stress for the material of the grab bar or seat.

(2) Shear stress induced in a grab bar or seat by the application of 250 lbf (1112N) shall be less than the allowable shear stress for the material of the grab bar or seat. If the connection between the grab bar or seat and its mounting bracket or other support is considered to be fully restrained, then direct and torsional shear stresses shall be totaled for the combined shear stress, which shall not exceed the allowable shear stress.

(3) Shear force induced in a fastener or mounting device from the application of 250 lbf (1112N) shall be less than the allowable lateral load of either the fastener or mounting device or the supporting structure, whichever is the smaller allowable load.

(4) Tensile force induced in a fastener by a direct tension force of 250 lbf (1112N) plus the maximum moment from the application of 250 lbf (1112N) shall be less than the allowable withdrawal load between the fastener and the supporting structure.

(5) Grab bars shall not rotate within their fittings.

4.26.4 **Eliminating Hazards**. A handrail or grab bar and any wall or other surface adjacent to it shall be free of any sharp or abrasive elements. Edges shall have a minimum radius of 1/8 in (3.2 mm).

4.27 Controls and Operating Mechanisms.

4.27.1 **General.** Controls and operating mechanisms required to be accessible by 4.1 shall comply with 4.27.

4.27.2 **Clear Floor Space**. Clear floor space complying with 4.2.4 that allows a forward or a parallel approach by a person using a wheelchair shall be provided at controls, dispensers, receptacles, and other operable equipment.

4.27.3* **Height**. The highest operable part of controls, dispensers, receptacles, and other operable equipment shall be placed within at least one of the reach ranges specified in 4.2.5 and 4.2.6. Electrical and communications system receptacles on walls shall be mounted no less than 15 in (380 mm) above the floor.

EXCEPTION: These requirements do not apply where the use of special equipment dictates otherwise or where electrical and communications systems receptacles are not normally intended for use by building occupants.

4.27.4 **Operation.** Controls and operating mechanisms shall be operable with one hand and shall not require tight grasping, pinching, or twisting of the wrist. The force required to activate controls shall be no greater than 5 lbf (22.2 N).

4.28 Alarms.

4.28.1 **General.** Alarm systems required to be accessible by 4.1 shall comply with 4.28. At a minimum, visual signal appliances shall be provided in buildings and facilities in each of the following areas: restrooms and any other general usage areas (e.g., meeting rooms), hallways, lobbies, and any other area for common use.

4.28.2* **Audible Alarms.** If provided, audible emergency alarms shall produce a sound that exceeds the prevailing equivalent sound level in the room or space by at least 15 dbA or exceeds any maximum sound level with a duration of 60 seconds by 5 dbA, whichever is louder. Sound levels for alarm signals shall not exceed 120 dbA.

4.28.3* **Visual Alarms**. Visual alarm signal appliances shall be integrated into the building or facility alarm system. If single station audible alarms are provided then single station visual alarm signals shall be provided. Visual alarm signals shall have the following minimum photometric and location features:

(1) The lamp shall be a xenon strobe type or equivalent.

(2) The color shall be clear or nominal white (i.e., unfiltered or clear filtered white light).

(3) The maximum pulse duration shall be two-tenths of one second (0.2 sec) with a maximum duty cycle of 40 percent. The pulse duration is defined as the time interval between initial and final points of 10 percent of maximum signal.

(4) The intensity shall be a minimum of 75 candela.

(5) The flash rate shall be a minimum of 1 Hz and a maximum of 3 Hz.

(6) The appliance shall be placed 80 in (2030 mm) above the highest floor level within the space or 6 in (152 mm) below the ceiling, whichever is lower.

4.29 Detectable Warnings.

4.29.1 **General**. Detectable warnings required by 4.1 and 4.7 shall comply with 4.29.
4.29.2* **Detectable Warnings on Walking Surfaces.** Detectable warnings shall consist of raised truncated domes with a diameter of nominal 0.9 in (23 mm), a height of nominal 0.2 in (5 mm) and a center-to-center spacing of nominal 2.35 in (60 mm) and shall contrast visually with adjoining surfaces, either light-on-dark, or dark-on-light.
The material used to provide contrast shall be an integral part of the walking surface. Detectable warnings used on interior surfaces shall differ from adjoining walking surfaces in resiliency or sound-on-cane contact.
4.29.3 **Detectable Warnings on Doors To Hazardous Areas.** (Reserved).
4.29.4 **Detectable Warnings at Stairs**. (Reserved).
4.29.5 **Detectable Warnings at Hazardous Vehicular Areas.** [***Provision suspended until July 26, 2001***] If a walk crosses or adjoins a vehicular way, and the walking surfaces are not separated by curbs, railings, or other elements between the pedestrian areas and vehicular areas, the boundary between the areas shall be defined by a continuous detectable warning which is 36 in (915 mm) wide, complying with 4.29.2.

4.30 Signage.

4.30.1* **General.** Signage required to be accessible by 4.1 shall comply with the applicable provisions of 4.30.
4.30.2* **Character Proportion.** Letters and numbers on signs shall have a width-to-height ratio between 3:5 and 1:1 and a stroke-width-to-height ratio between 1:5 and 1:10.
4.30.3 **Character Height**. Characters and numbers on signs shall be sized according to the viewing distance from which they are to be read. The minimum height is measured using an upper case X. Lower case characters are permitted.

Height Above Finished Floor	**Minimum Character Height**
Suspended or Projected Overhead in compliance with 4.4.2	3 in (75 mm) minimum

4.30.4 **Raised and Brailled Characters and Pictorial Symbol Signs (Pictograms)**. Letters and numerals shall be raised 1/32 in (0.79 mm) minimum, upper case, sans serif or simple serif type and shall be accompanied with Grade 2 Braille. Raised characters shall be at least 5/8 in (16 mm) high, but no higher than 2 in (50 mm). Pictograms shall be accompanied by the equivalent verbal description placed directly below the pictogram. The border dimension of the pictogram shall be 6 in (152 mm) minimum in height.
4.30.5* **Finish and Contrast.** The characters and background of signs shall be eggshell, matte, or other non-glare finish. Characters and symbols shall contrast with their background -- either light characters on a dark background or dark characters on a light background.

4.30.6 **Mounting Location and Height**. Where permanent identification is provided for rooms and spaces, signs shall be installed on the wall adjacent to the latch side of the door. Where there is no wall space to the latch side of the door, including at double leaf doors, signs shall be placed on the nearest adjacent wall. Mounting height shall be 60 in (1525 mm) above the finish floor to the centerline of the sign. Mounting location for such signage shall be so that a person may approach within 3 in (76 mm) of signage without encountering protruding objects or standing within the swing of a door.

Definitions

Access Aisle.

An accessible pedestrian space between elements, such as parking spaces, seating, and desks, that provides clearances appropriate for use of the elements.

Accessible.

Describes a site, building, facility, or portion thereof that complies with these guidelines.

Accessible Element.

An element specified by these guidelines (for example, telephone, controls, and the like).

Accessible Route.

A continuous unobstructed path connecting all accessible elements and spaces of a building or facility. Interior accessible routes may include corridors, floors, ramps, elevators, lifts, and clear floor space at fixtures. Exterior accessible routes may include parking access aisles, curb ramps, crosswalks at vehicular ways, walks, ramps, and lifts.

Accessible Space.

Space that complies with these guidelines.

Administrative Authority

A governmental agency that adopts or enforces regulations and guidelines for the design, construction, or alteration of buildings and facilities.

Building.

Any structure used and intended for supporting or sheltering any use or occupancy.

Circulation Path

An exterior or interior way of passage from one place to another for pedestrians, including, but not limited to, walks, hallways, courtyards, stairways, and stair landings.

Clear.

Unobstructed.

Clear Floor Space.

The minimum unobstructed floor or ground space required to accommodate a single, stationary wheelchair and occupant.

Cross Slope.

The slope that is perpendicular to the direction of travel (see running slope).

Curb Ramp.

A short ramp cutting through a curb or built up to it.

Detectable Warning.

A standardized surface feature built in or applied to walking surfaces or other elements to warn visually impaired people of hazards on a circulation path.

Dwelling Unit.

A single unit which provides a kitchen or food preparation area, in addition to rooms and spaces for living, bathing, sleeping, and the like. Dwelling units include a single family home or a townhouse used as a transient group home; an apartment building used as a shelter; guestrooms in a hotel that provide sleeping accommodations and food preparation areas; and other similar facilities used on a transient basis. For purposes of these guidelines, use of the term "Dwelling Unit" does not imply the unit is used as a residence.

Egress, Means of.

A continuous and unobstructed way of exit travel from any point in a building or facility to a public way. A means of egress comprises vertical and horizontal travel and may include intervening room spaces, doorways, hallways, corridors, passageways, balconies, ramps, stairs, enclosures, lobbies, horizontal exits, courts and yards. An accessible means of egress is one that complies with these guidelines and does not include stairs, steps, or escalators. Areas of rescue assistance or evacuation elevators may be included as part of accessible means of egress.

Element.

An architectural or mechanical component of a building, facility, space, or site, e.g., telephone, curb ramp, door, drinking fountain, seating, or water closet.

Entrance.

Any access point to a building or portion of a building or facility used for the purpose of entering. An entrance includes the approach walk, the vertical access leading to the entrance platform, the entrance platform itself, vestibules if provided, the entry door(s) or gate(s), and the hardware of the entry door(s) or gate(s).

Facility.

All or any portion of buildings, structures, site improvements, complexes, equipment, roads, walks, passageways, parking lots, or other real or personal property located on a site.

Power-assisted Door.

A door used for human passage with a mechanism that helps to open the door, or relieves the opening resistance of a door, upon the activation of a switch or a continued force applied to the door itself.

Ramp.

A walking surface which has a running slope greater than 1:20.

Running Slope.

The slope that is parallel to the direction of travel (see cross slope).

Signage.

Displayed verbal, symbolic, tactile, and pictorial information.

Sleeping Accommodations.

Rooms in which people sleep; for example, dormitory and hotel or motel guest rooms or suites.

Space.

A definable area, e.g., room, toilet room, hall, assembly area, entrance, storage room, alcove, courtyard, or lobby.

Tactile.

Describes an object that can be perceived using the sense of touch.

TDD (Telecommunication Devices for the Deaf).

See text telephone.

Walk.

An exterior pathway with a prepared surface intended for pedestrian use, including general pedestrian areas such as plazas and courts.

Appendix - Figures

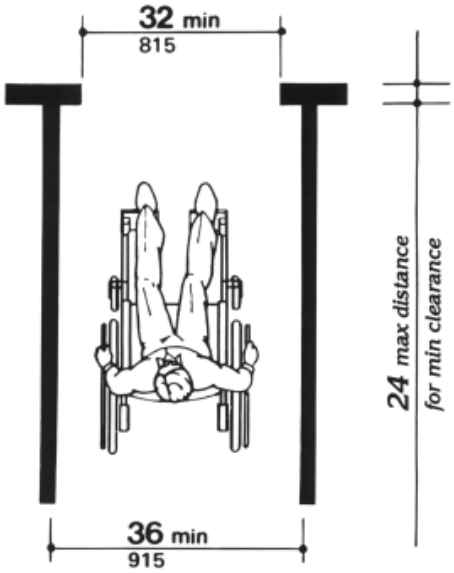

Figure 1

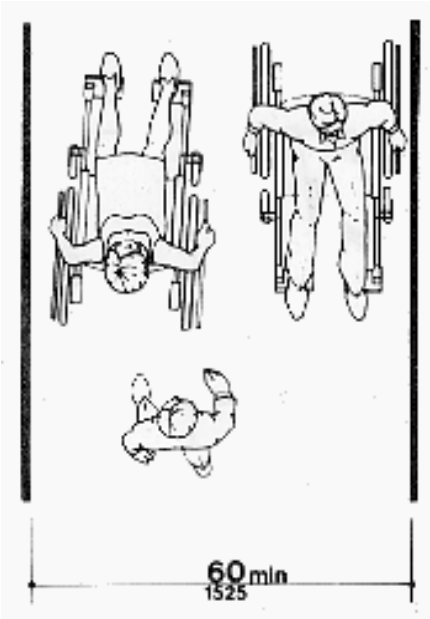

Figure 2

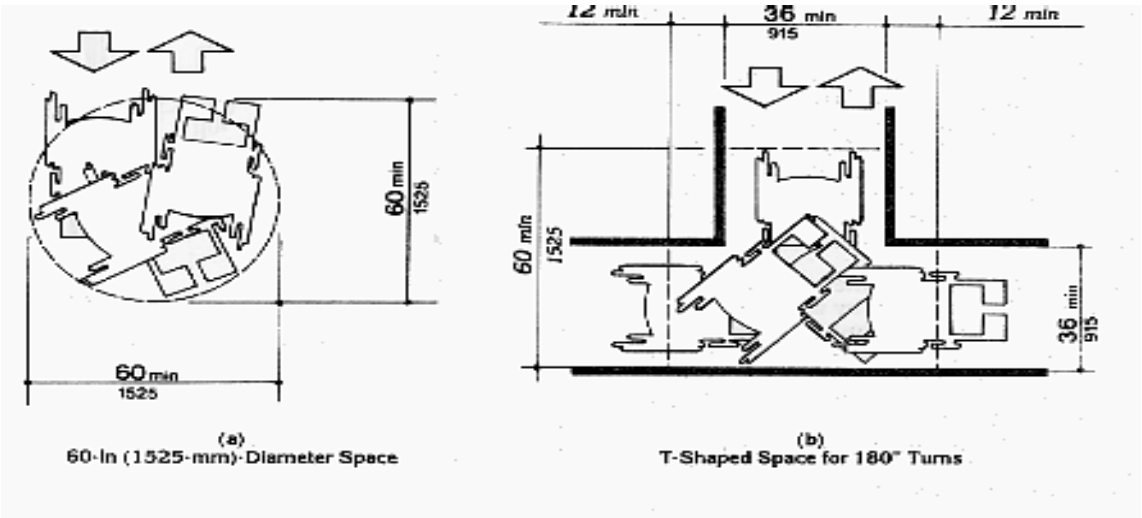

Figures 3

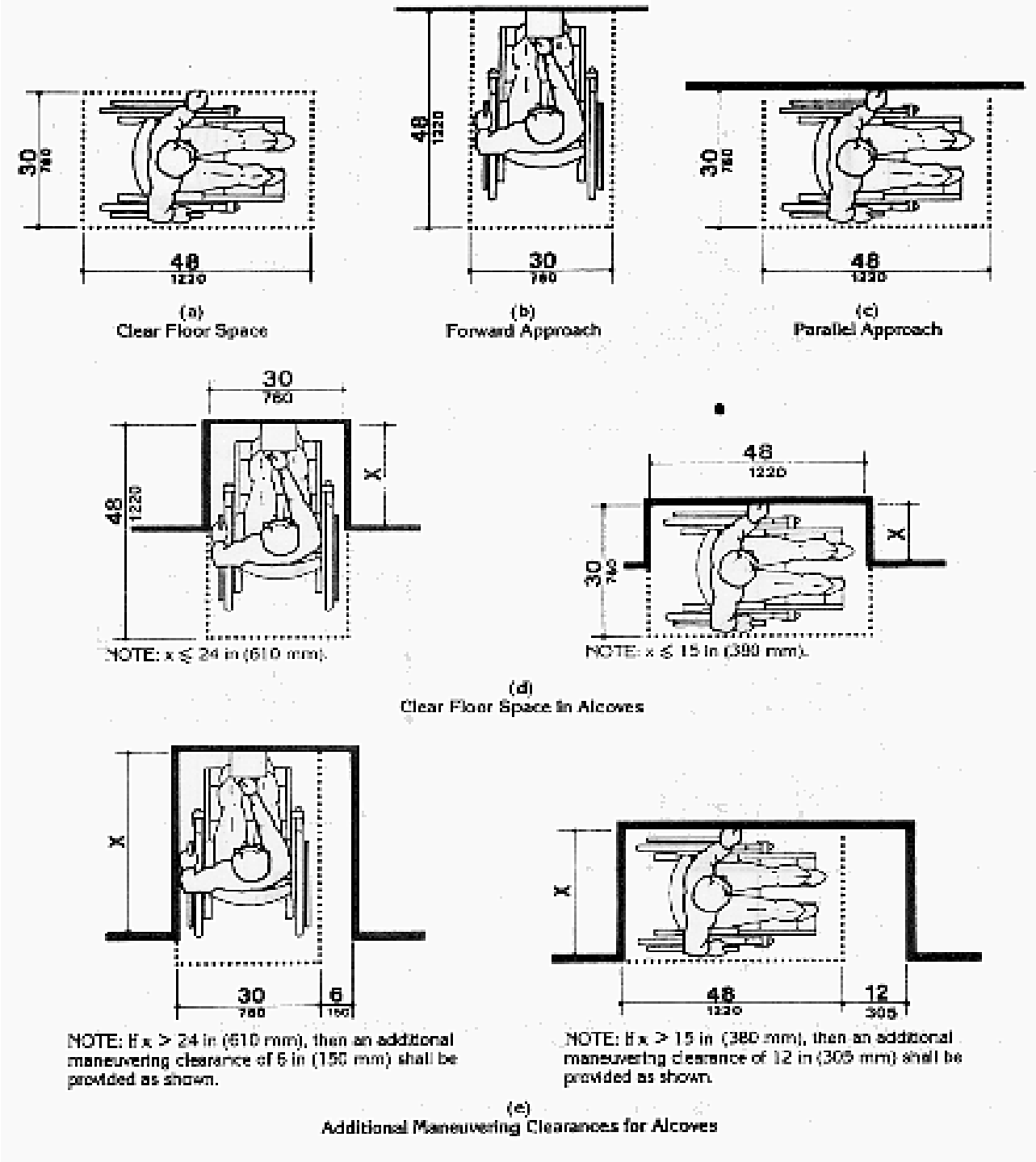
30
760
48
1220
(a)
Clear Floor Space
48
1220
30
760
(b)
Forward Approach
30
760
48
1220
(c)
Parallel Approach
30
760
48
1220
x
NOTE: x ≤ 24 in (610 mm).
48
1220
30
760
x
NOTE: x ≤ 15 in (380 mm).
(d)
Clear Floor Space in Alcoves
x
30
760
6
150
NOTE: If x > 24 in (610 mm), then an additional maneuvering clearance of 6 in (150 mm) shall be provided as shown.
x
48
1220
12
305
NOTE: If x > 15 in (380 mm), then an additional maneuvering clearance of 12 in (305 mm) shall be provided as shown.
(e)
Additional Maneuvering Clearances for Alcoves

Figures 4

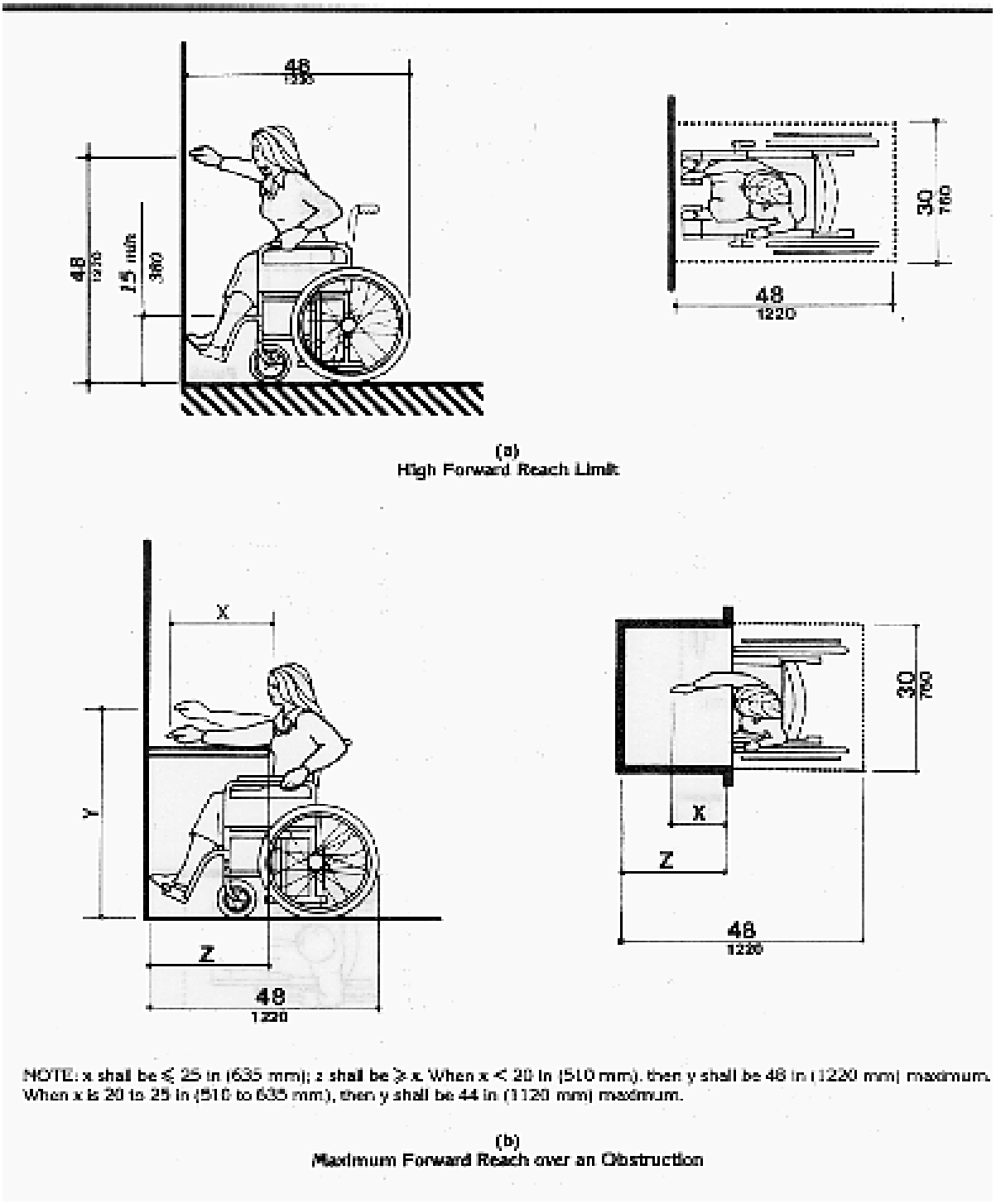
48
1220
48
1220
15 min
380
30
760
48
1220
(a)
High Forward Reach Limit
X
Y
Z
48
1220
30
760
X
Z
48
1220
NOTE: x shall be ≤ 25 in (635 mm); z shall be ≥ x. When x < 20 in (510 mm), then y shall be 48 in (1220 mm) maximum.
When x is 20 to 25 in (510 to 635 mm), then y shall be 44 in (1120 mm) maximum.
(b)
Maximum Forward Reach over an Obstruction

Figure 5

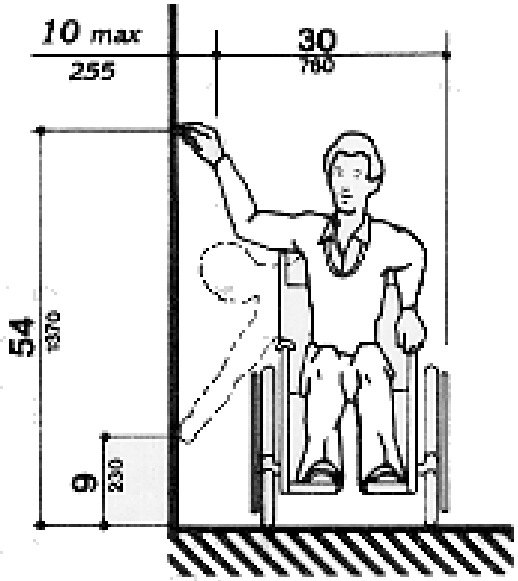

Figure 6b

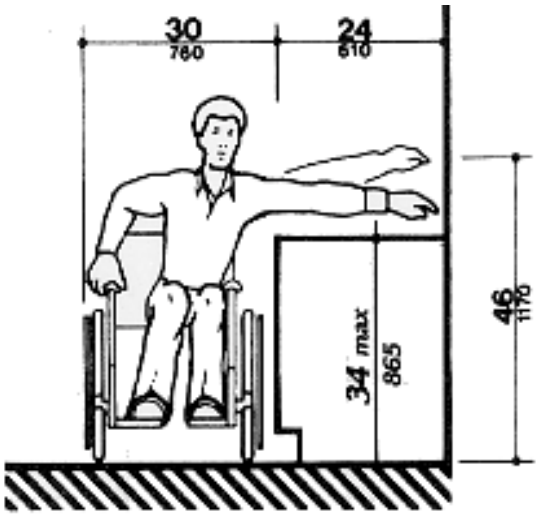

Figure 6c

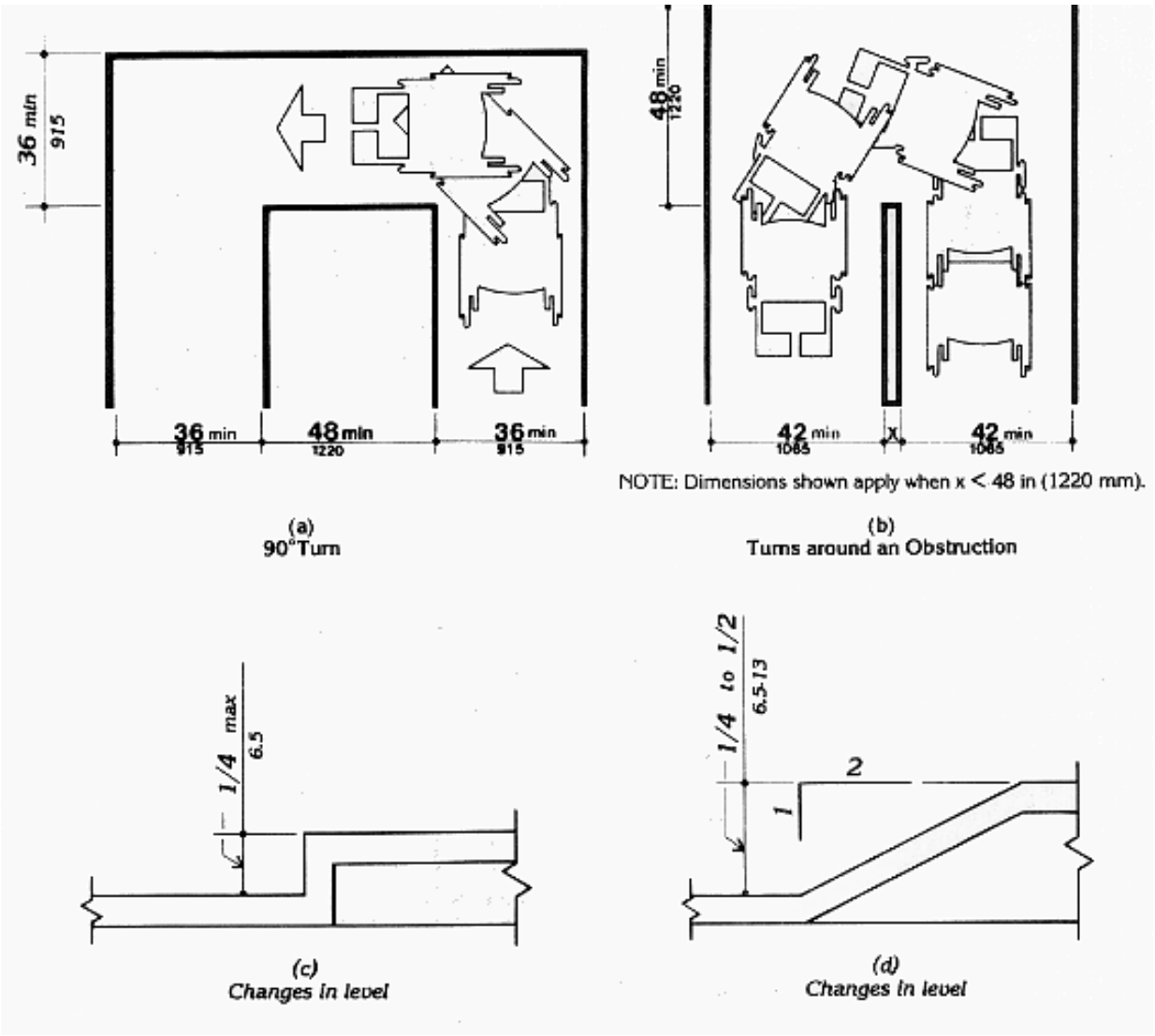
36 min
915
36 min
915
48 min
1220
36 min
915
(a)
90° Turn
48 min
1220
42 min
1065
x
42 min
1065
NOTE: Dimensions shown apply when x < 48 in (1220 mm).
(b)
Turns around an Obstruction
1/4 max
6.5
(c)
Changes in level
1/4 to 1/2
6.5-13
2
1
(d)
Changes in level

Figure 7

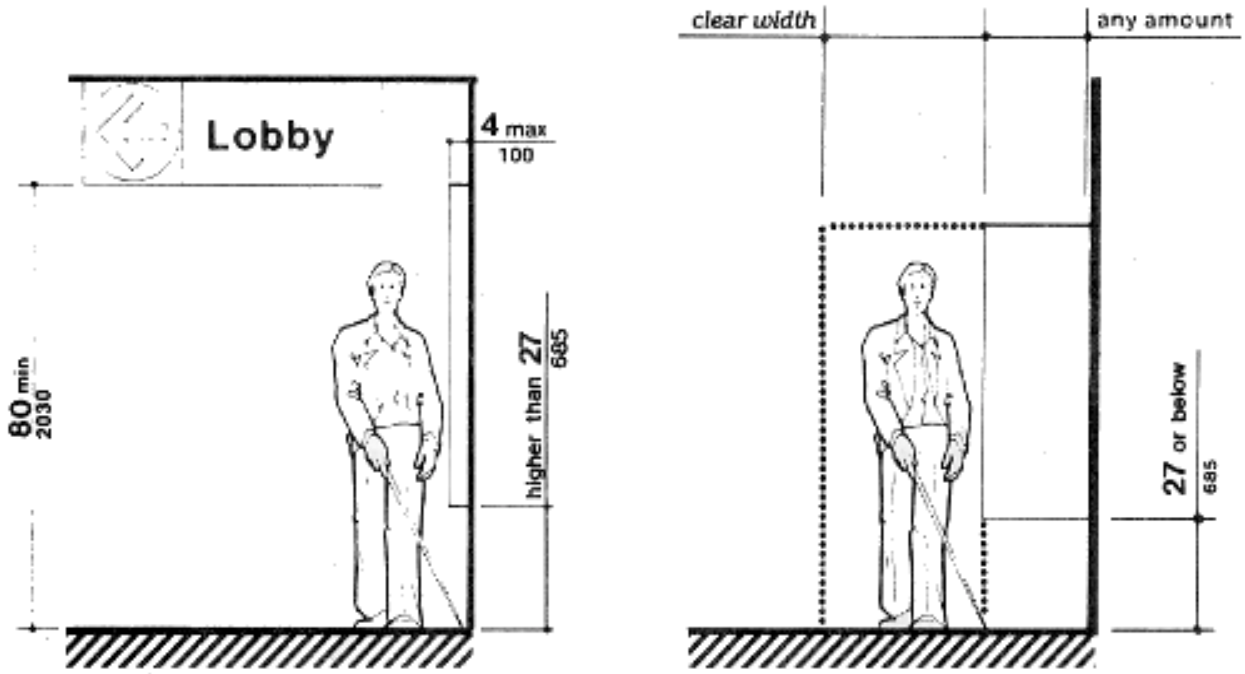

Figures 8a

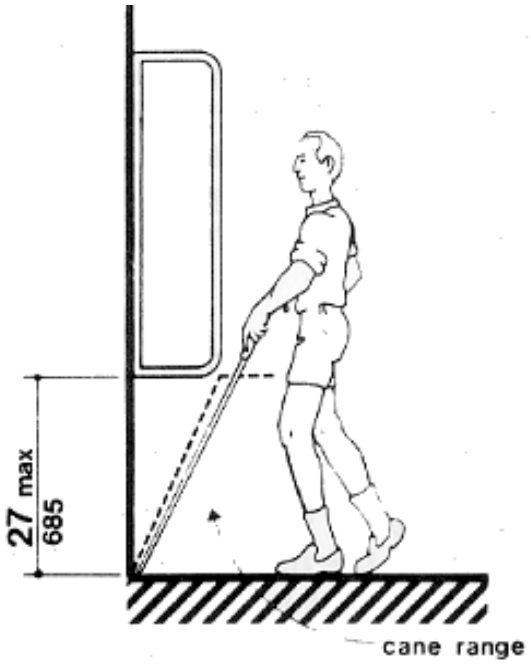

Figure 8b

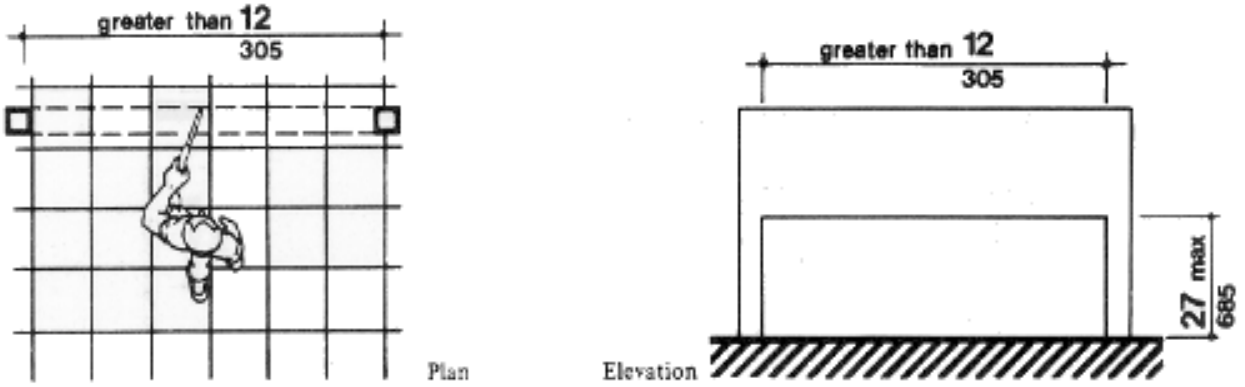

Figures 8c

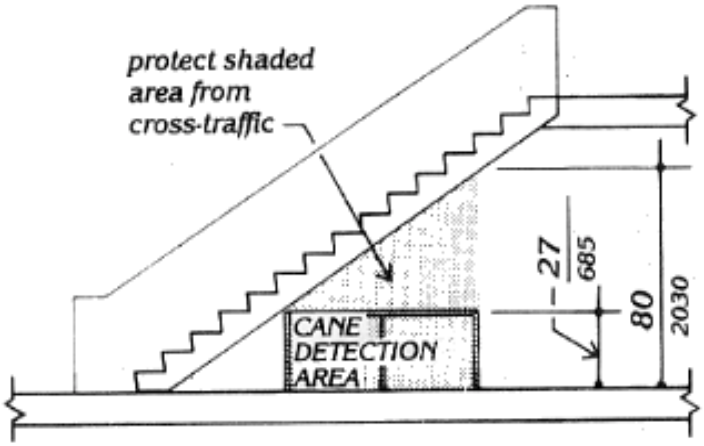

Figure 8c-1

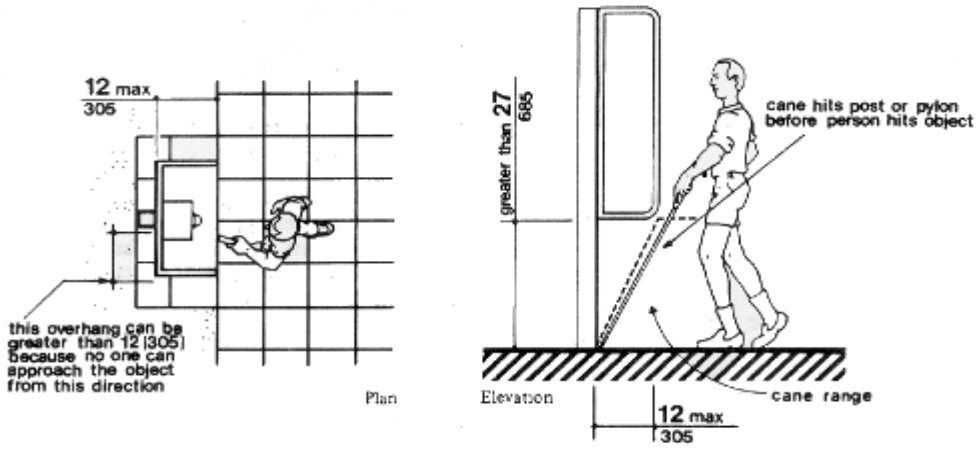

Figures 8d

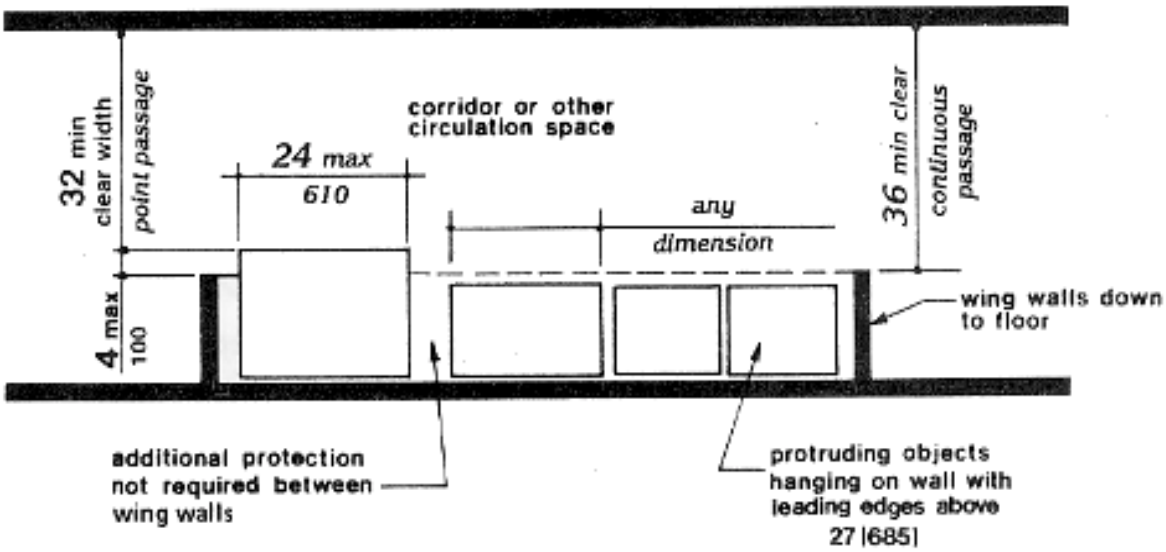

Figure 8e

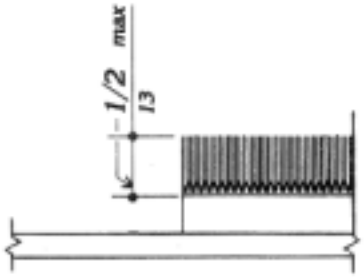

Figure 8f

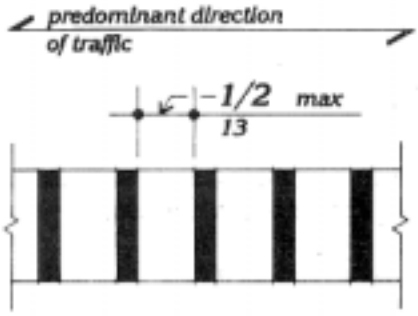

Figure 8g

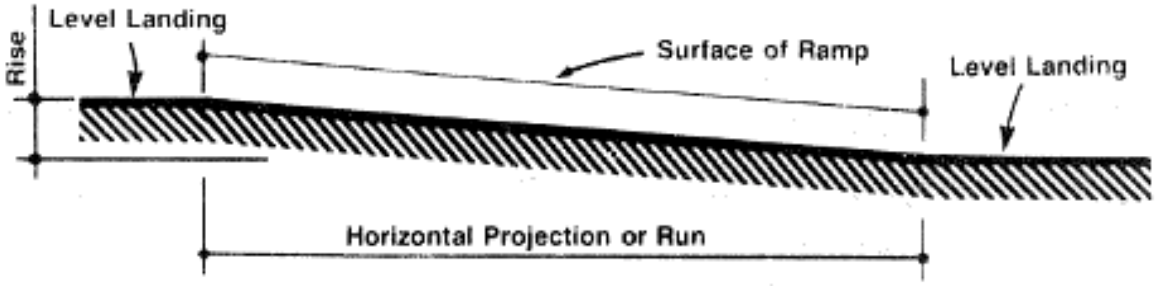

	Maximum Rise		Maximum Horizontal Projection	
Slope	in	mm	ft	m
1:12 to < 1:16	30	760	30	9
1:16 to < 1:20	30	760	40	12

Figure 16

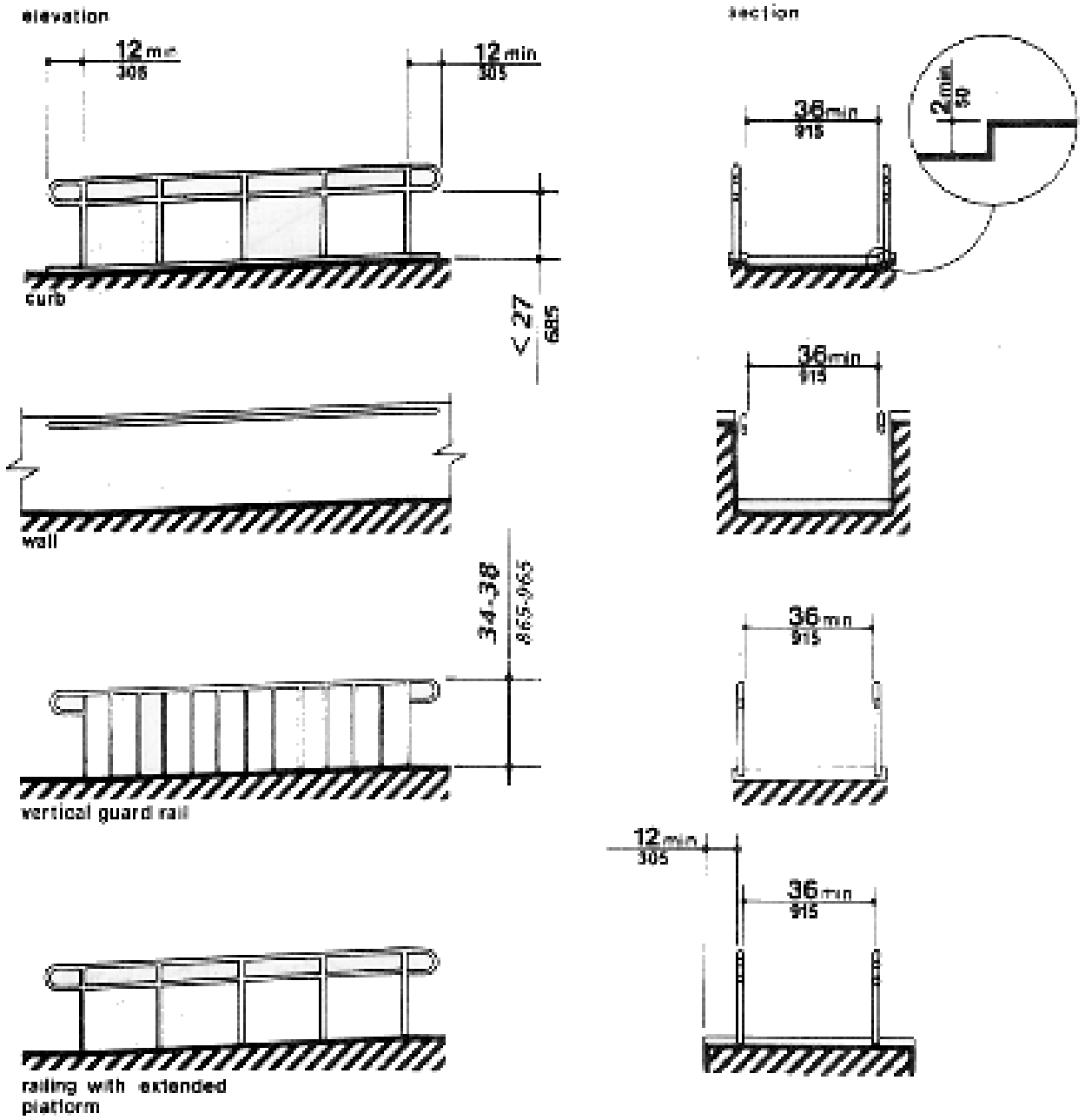
elevation
12 min
305
12 min
305
curb
< 27
685
wall
34-38
865-965
vertical guard rail
railing with extended
platform
section
36 min
915
2 min
50
36 min
915
36 min
915
12 min
305
36 min
915

Figures 17

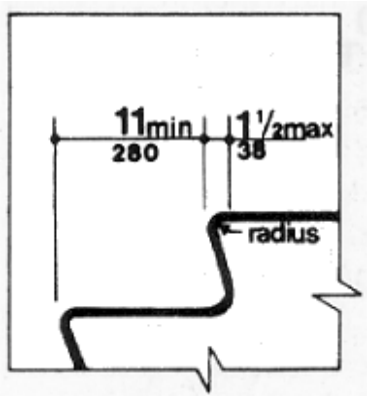

Figure 18

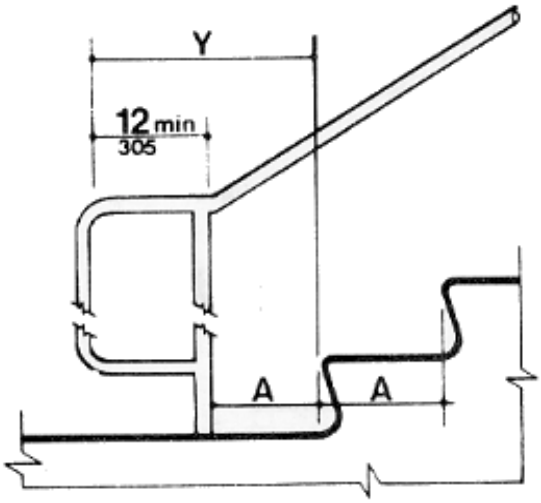

Figure 19c

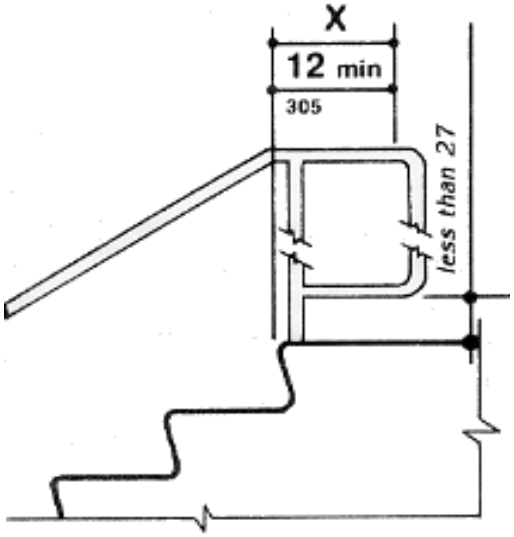

Figure 19d

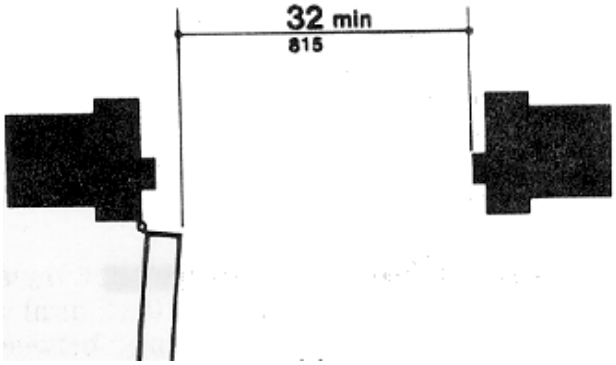

Figure 24a

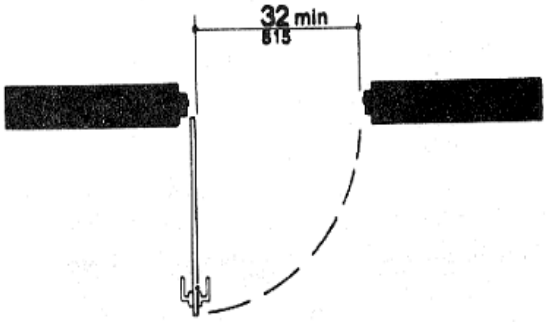

Figure 24b

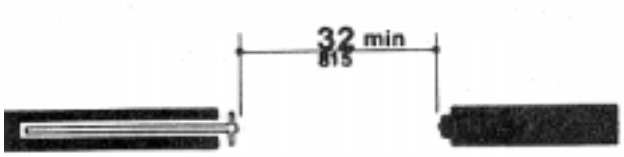

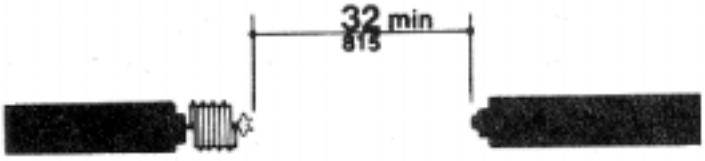

Figure 24e

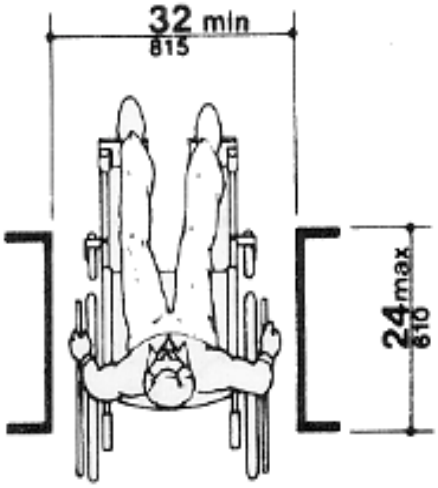

Figure 24c

Figure 24d

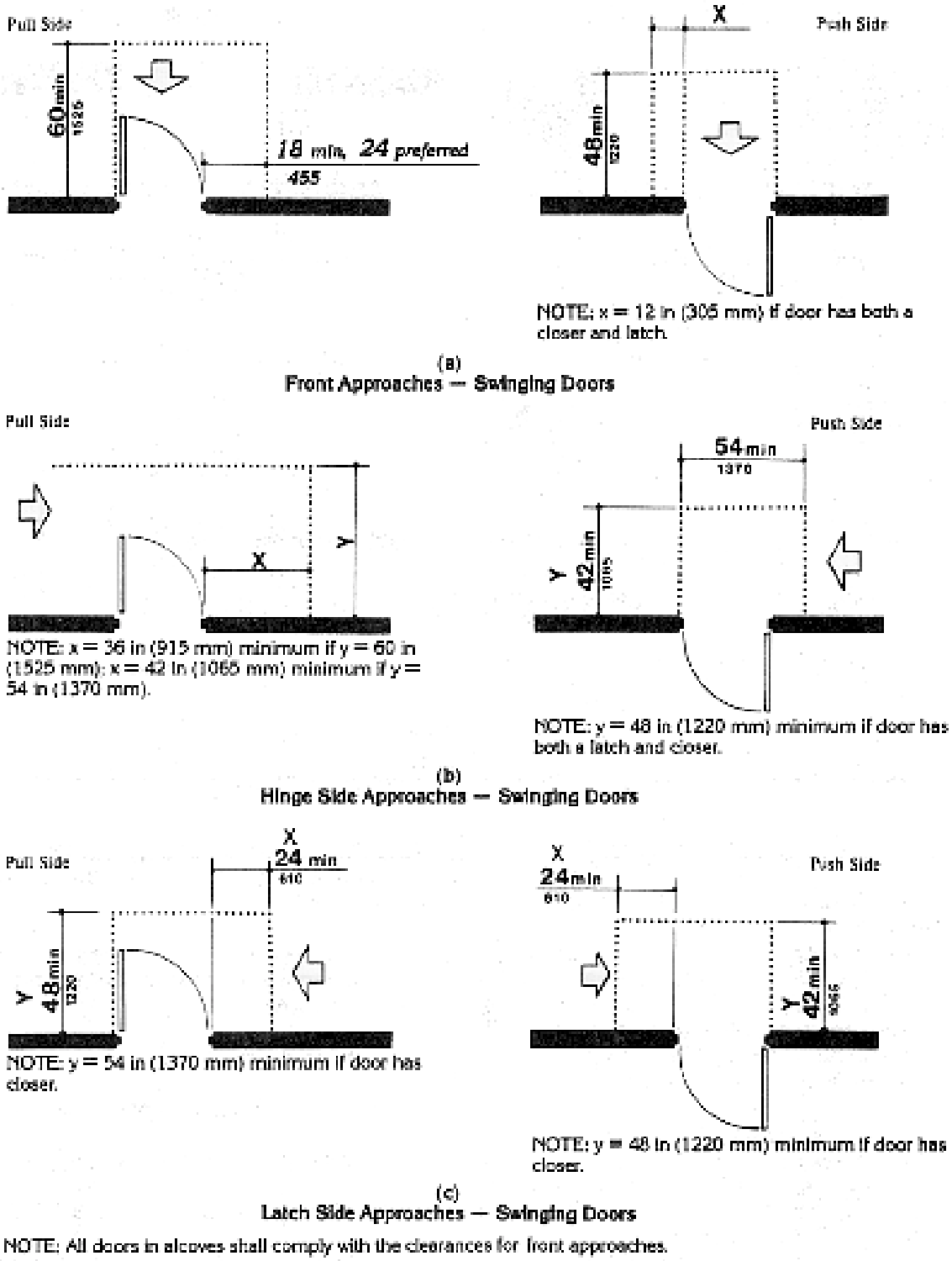
Pull Side
60 min
1525
18 min, 24 preferred
455
X
Push Side
48 min
1220
NOTE: x = 12 in (305 mm) if door has both a closer and latch.
(a)
Front Approaches — Swinging Doors
Pull Side
X
Y
NOTE: x = 36 in (915 mm) minimum if y = 60 in (1525 mm); x = 42 in (1065 mm) minimum if y = 54 in (1370 mm).
Push Side
54 min
1370
Y
42 min
1065
NOTE: y = 48 in (1220 mm) minimum if door has both a latch and closer.
(b)
Hinge Side Approaches — Swinging Doors
Pull Side
X
24 min
610
Y
48 min
1220
NOTE: y = 54 in (1370 mm) minimum if door has closer.
X
24 min
610
Push Side
Y
42 min
1065
NOTE: y = 48 in (1220 mm) minimum if door has closer.
(c)
Latch Side Approaches — Swinging Doors
NOTE: All doors in alcoves shall comply with the clearances for front approaches.

Figure 25

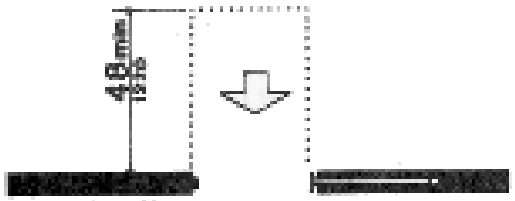

(d)
Front Approach — Sliding Doors and Folding Doors

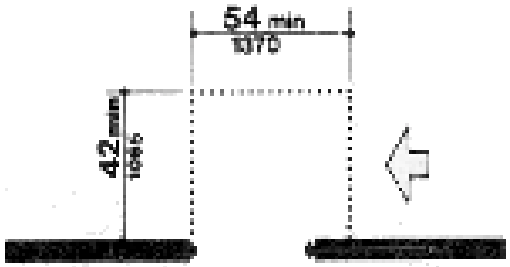

(e)
Slide Side Approach — Sliding Doors and Folding Doors

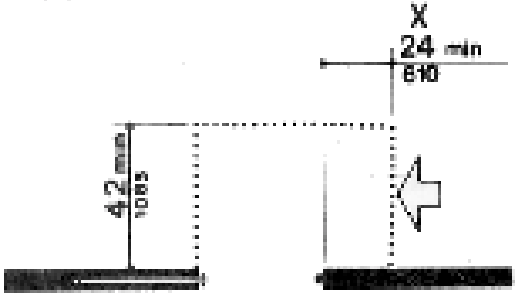

(f)
Latch Side Approach — Sliding Doors and Folding Doors

Figure 25 (continued)

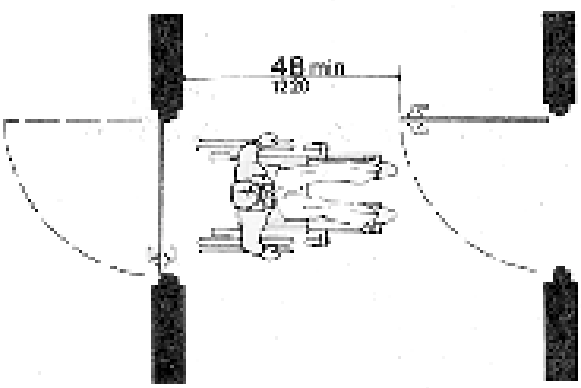

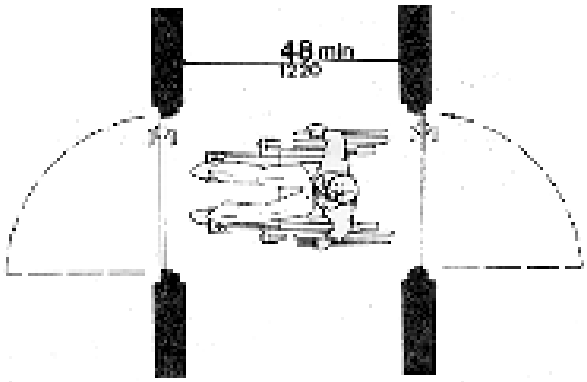

Figures 26

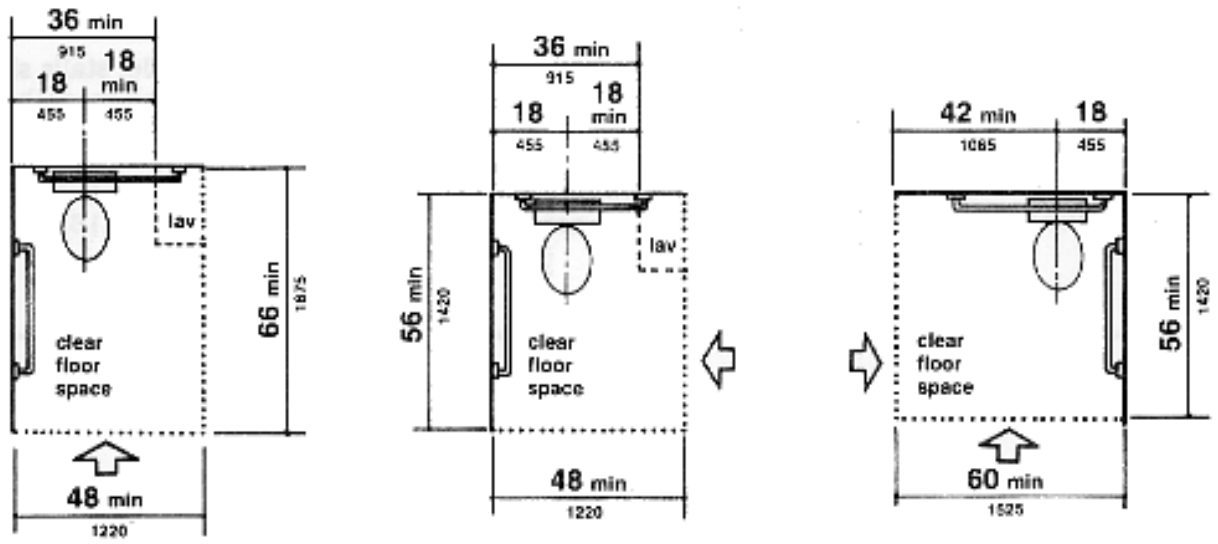

Figures 28

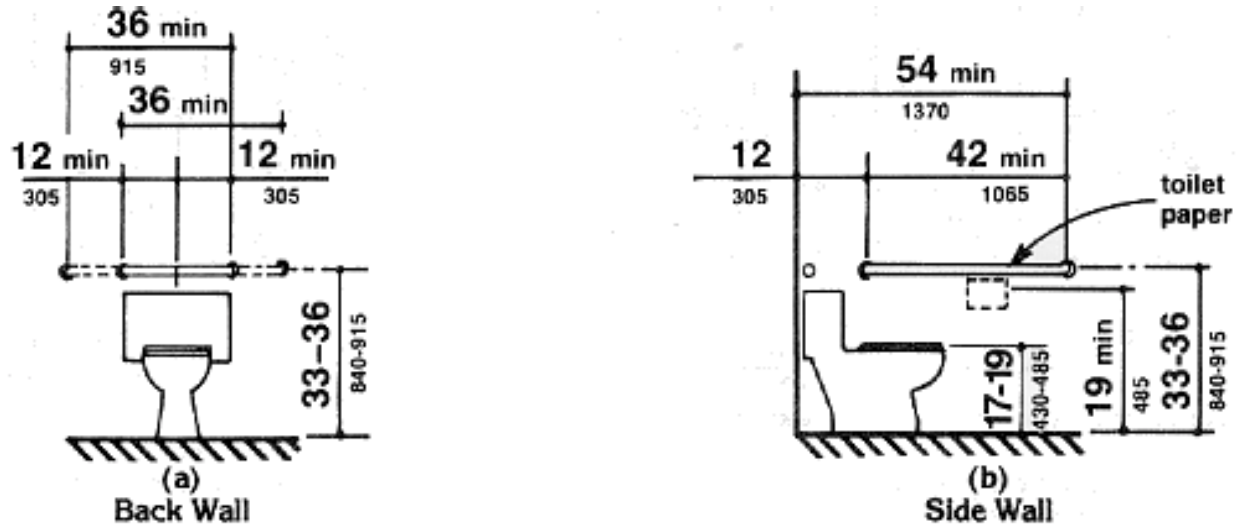

Figures 29

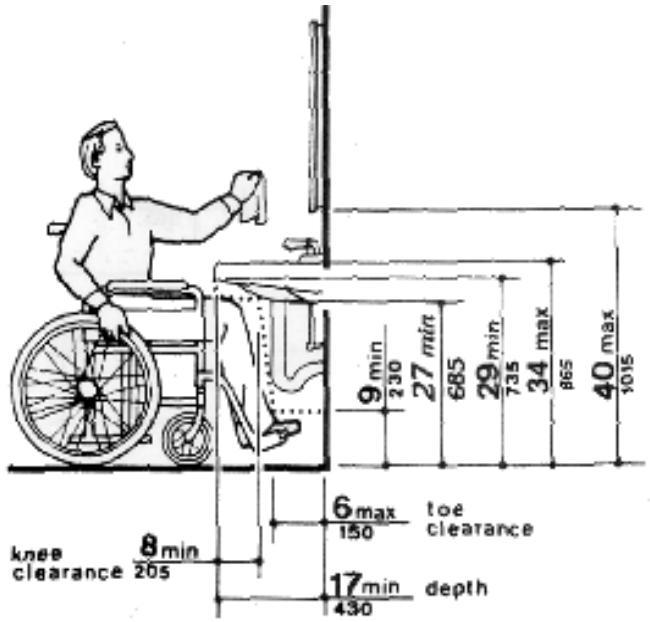

Figure 31

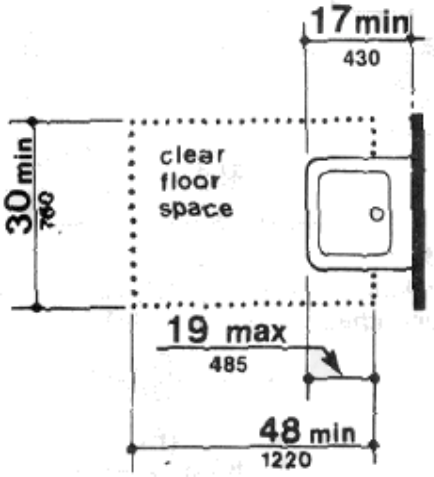

Figure 32

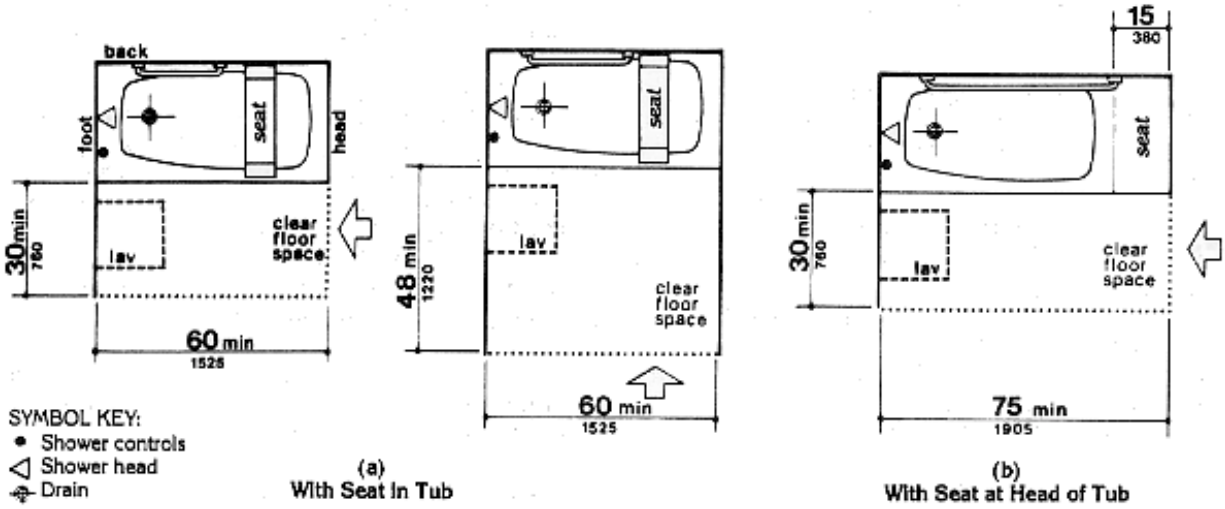

Figures 33

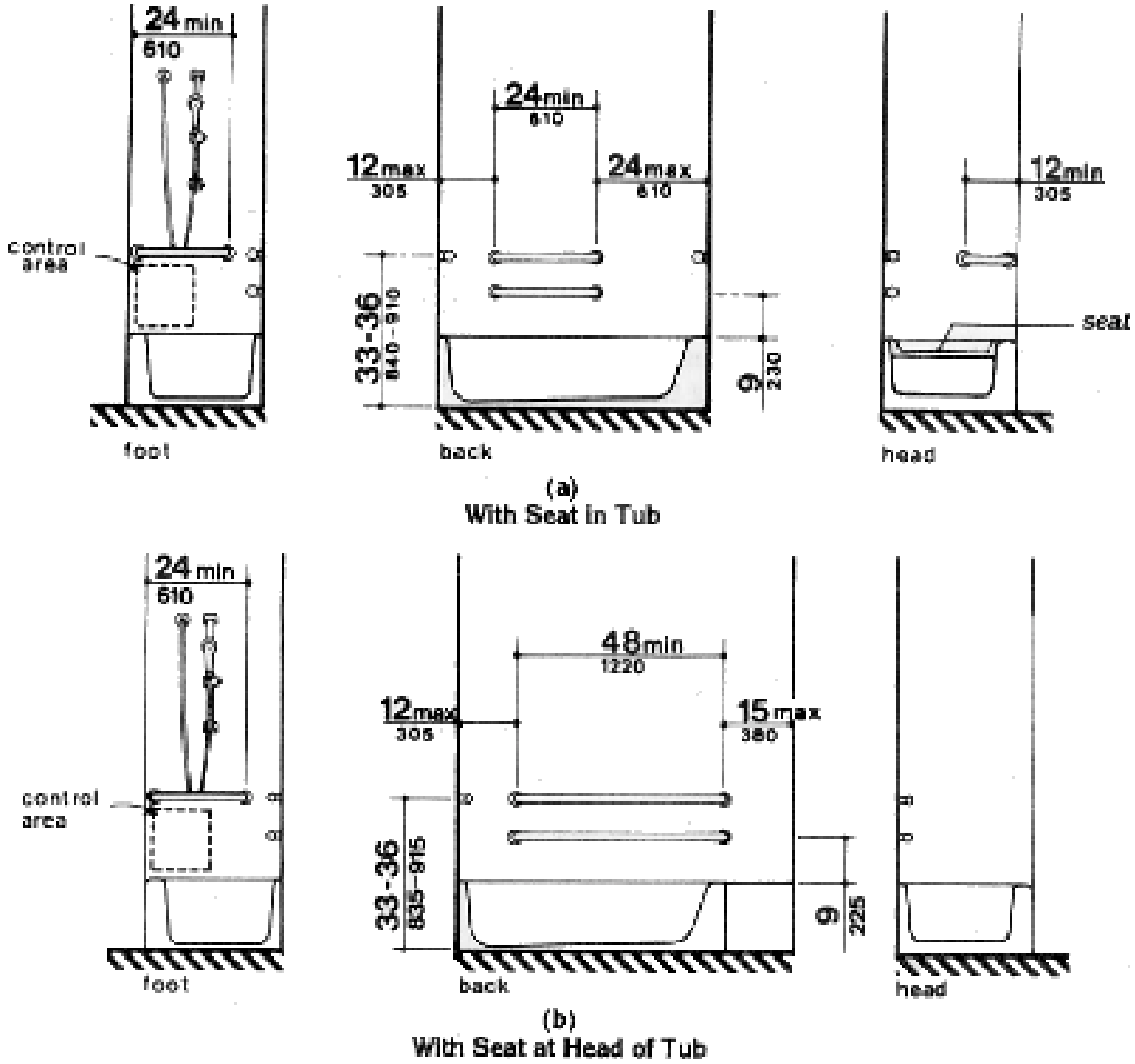
24 min
610
control area
foot
24min
610
12max
305
24max
610
33-36
840-910
9
230
back
12min
305
seat
head
(a)
With Seat in Tub
24 min
610
control area
foot
48min
1220
12max
305
15max
380
33-36
835-915
9
225
back
head
(b)
With Seat at Head of Tub

Figures 34

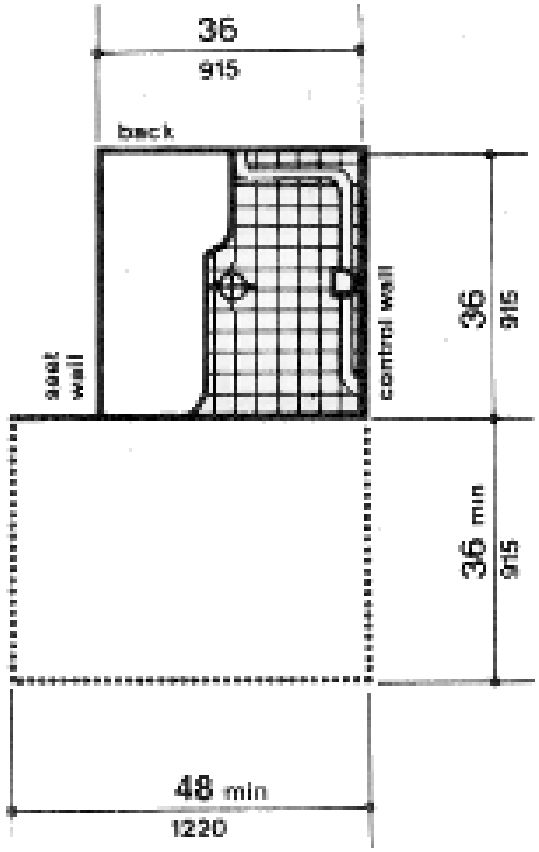

Figure 35a

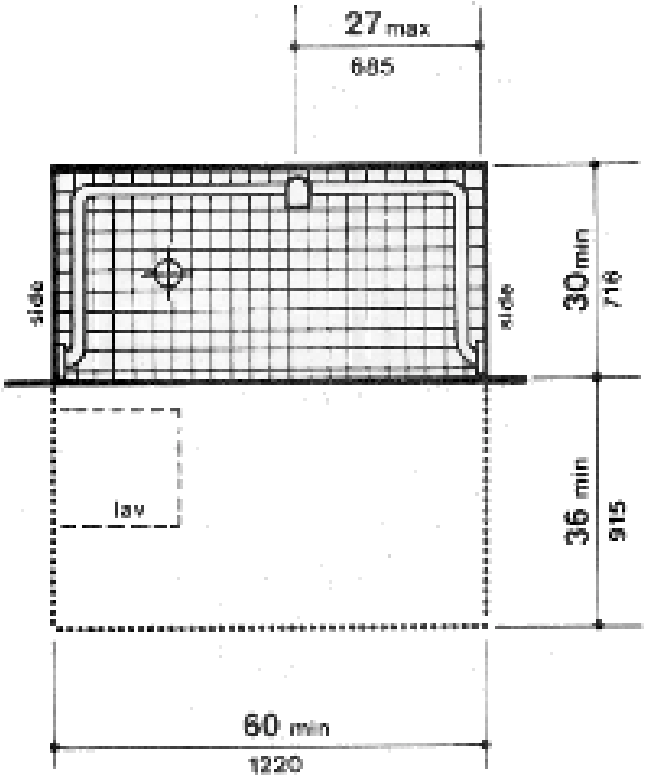

Figure 35b

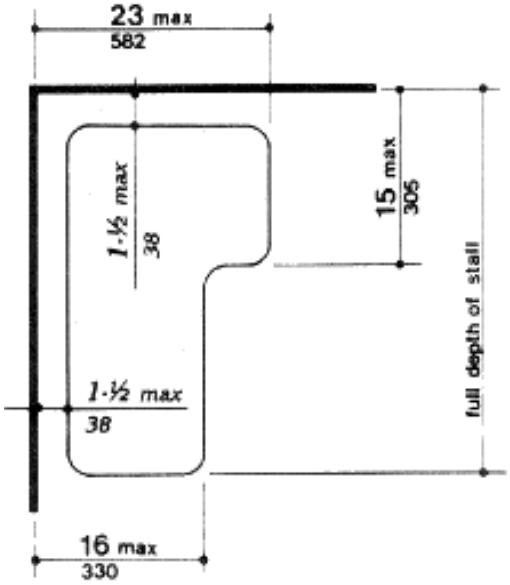

Figure 36

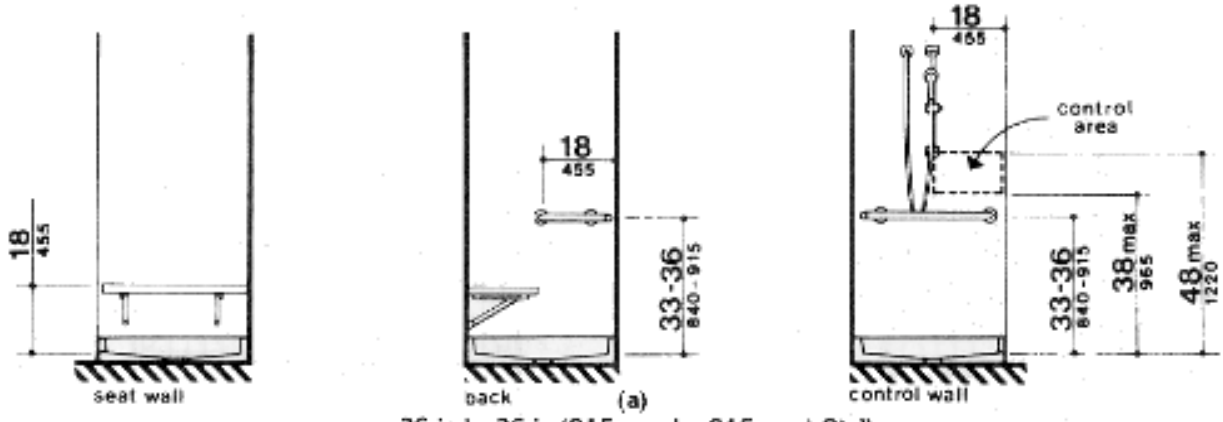

36-in by 36-in (915-mm by 915-mm) Stall

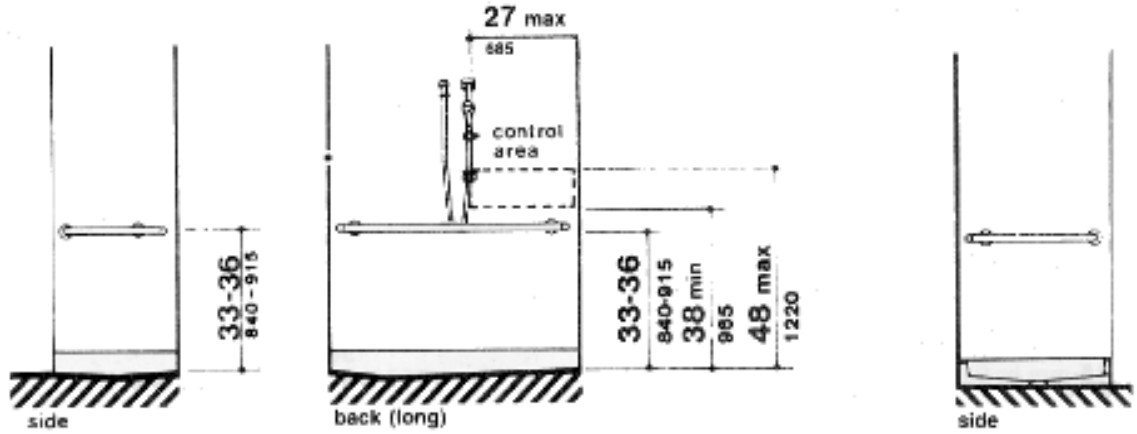

NOTE: Shower head and control area may be on back (long) wall (as shown) or on either side wall.

(b)

30-in by 60-in (760-mm by 1525-mm) Stall

Figures 37

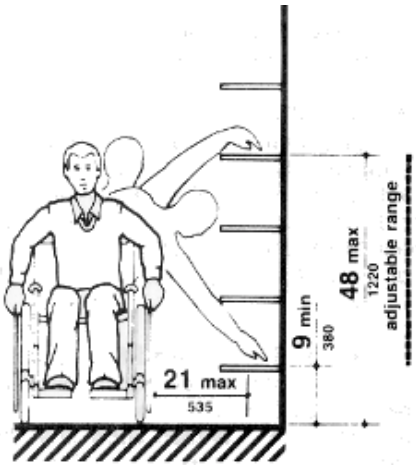

Figure 38a

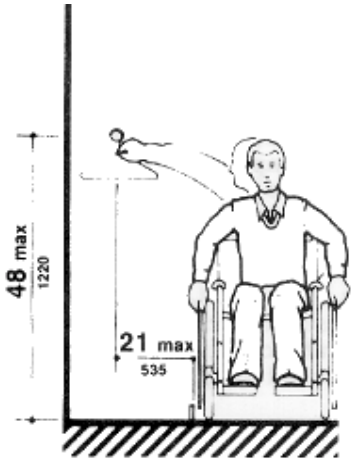

Figure 38b

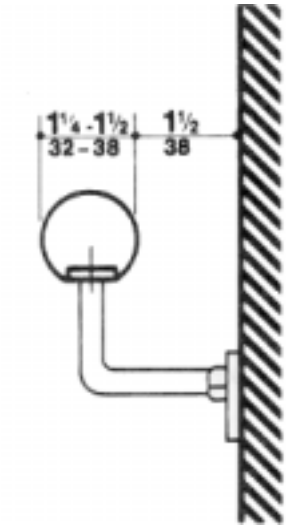

Figure 39a

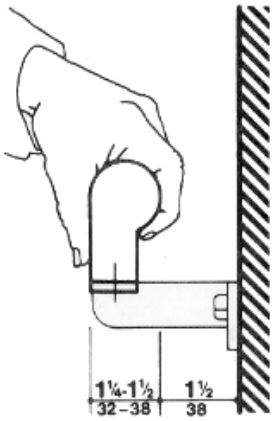

Figure 39b

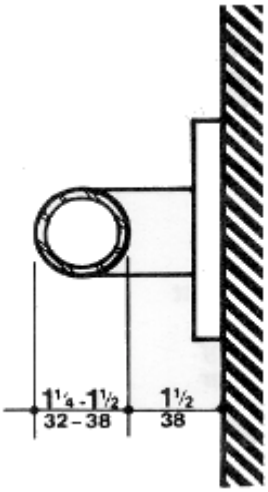

Figure 39e