Inventions and Innovation Annual Report 2005

U.S. Department of Energy
Energy Efficiency and Renewable Energy
Bringing you a prosperous future where energy is clean, abundant, reliable, and affordable

March 2005

Table of Contents

Introduction 7-9

Table of Commercial Successes 10-13

Biomass Program

Commercialized Technologies

- Continuous Cascade Fermentation System for Chemical Precursors 16
- Irrigation Valve Solenoid Energy Saver 17
- Stalk and Root Embedding Plow 18

Emerging Technology

- BEI Cellulose Hydrolysis Process 19

Building Technologies Program

Commercialized Technologies

- Aluminum Roofing System 22
- D'MAND® Hot Water Recirculating and Waste Prevention System 23
- Electronic Starter Device for Fluorescent Lamps 24
- Guide for Window Routing Device 25
- High-Speed, Permanent Magnet Motor 26
- Improved Poured Concrete Wall-Forming System 27
- Method of Constructing Insulated Foam Homes 28
- Restaurant Exhaust Ventilation Monitor/Controller 29
- RR-1 Insulating Screw Cap 30
- Selective Zone Isolation for HVAC Systems 31
- The Solar SKYLITE Water Heater 32
- Ultraflo Automated Plumbing System 33
- Wallace Energy Systems' Solar-Assisted Heat Pump Water Heater 34

Emerging Technologies

- Cromer Cycle Air Conditioner 35
- Electronic High-Pressure Sodium Ballast 35
- GibBAR-Wall™ System 35
- Inner Roof Solar System 36
- Simple Control for Single-Phase AC Induction Motors in HVAC Systems 36
- Variable Speed, Low Cost Motor for Residential HVAC Systems 36

Table of Contents

Distributed Energy Program

Commercialized Technology

- Portable Automatic Firewood Processor 38

Emerging Technologies

- Air Turbine Cycle Plant 39
- Clean Energy from Biosolids 39
- Deep-Discharge Zinc-Bromine Battery Module 39
- Particulate Ejection Coal Fired Turbine 39
- Rotary Burner 40
- Thermoelectric Generator for Diesel Engines 40
- Thermophotovoltaic Electric Power Generation Using Exhaust Heat 40
- Two-Phase Hero Turbine with Curved No-Separation Nozzles 40

FreedomCAR & Vehicle Technologies Program

Commercialized Technologies

- Dual Fuel Energy Conversion System for Diesel Engines 42
- Fuel Transport Modules 43
- SeaCoaster 44

Emerging Technologies

- An Indirect Sensing Technique for Closed-Loop Diesel Fuel Quantity Control 45
- Clemson Camshaft 45
- Flywheel Electric Battery 45
- High Pressure, Electronic, Common-Rail Fuel Injection System for Diesel Engines 45
- Hydrostatic Mooring System 46
- Innovative Approach to Improved Fuel Economy in Heavy-Duty Trucks 46
- Ship-Borne Emergency Oil Containment System and Method 46

Hydrogen Fuel Cells & Infrastructure Technologies Program

Emerging Technology

- Industrial Fuel Cell Micro-Generator 48

Industrial Technologies Program (ITP)

Commercialized Technologies

Aluminum Technologies 50-52
Aluminum Reclaimer for Foundry Applications 50
Aluminum-Rich Concentrate from Municipal Waste 51
High-Capacity Melt Furnace 52

Chemical Technology 53
Aqueous Cleaner and CleanRinse™ Recycling System 53

Crosscutting Technologies 54-63
Carsonite Noise Barrier Wall 54
Diffusion and Thermal Heat Treatment of Bulk Powders 55
Evaporator Fan Controller for Medium-Temperature Walk-In Refrigerators 56
Foamed Recyclables 57
In-Situ, Real Time Measurement of Melt Constituents 58
Mobile Zone Optimized Control System for Ultra-Efficient Surface-Coating Operations 59
Peripheral Mower Blade 60
SIDTEC™ Condenser Maintenance Program 61
Torsional Cylindrical Impulse Shear Soil Test for Earthquake Design 62
WeldComputer™ Resistance Welder Adaptive Control 63

Forest Products Technologies 64-68
DELTA T Dryer Control System 64
Detection and Control of Deposition on Pendant Tubes in Kraft Chemical Recovery Boilers 65
Lignin Separation and Epoxide-Lignin Manufacturing 66
Removal of Bark from Whole Logs 67
Thermodyne™ Evaporator – A Molded Pulp Products Dryer 68

Metal Casting Technologies 69-71
Ceramic Composite Die for Metal Casting 69
Laser-Based Laminated Object Manufacturing 70
Meta-Lax Stress Relief Process 71

Mining Technologies 72-73
A Mechanical Stemming Device for Use in Explosive Loaded Blast Holes 72
Wireless Telemetry for Mine Monitoring and Emergency Communications 73

Petroleum Technologies 74-81
Absorption Heat Pump/Refrigeration Unit 74
Dynamic Gas Pulse Loading System 75
Mercury-Free PVT Apparatus for Thermophysical Property Analysis of Hydrocarbon Reservoir Fluids 76
Method and Apparatus to Revive Gas Wells 77
New Technology for Sulfide Reduction and Increased Oil Recovery 78
Reciprocating Rod Pump Seal Assembly 79
The Russell Self-Piloted Check Valve 80
V-PLUS™ Refrigerant Oil Cooling System 81

Steel Technologies 82-83
Method and Apparatus for Handling and Dry Quenching Coke 82
Recovery of Acids and Metal Salts from Pickling Liquors 83

Industrial Technologies Program (ITP) continued

Emerging Technologies

Aluminum Technologies 86

Improved Methods to Manufacture Carbon-Alumina Composite Anodes for Aluminum Reduction 86

Novel Technique for Increasing Corrosion Resistance of Aluminum and Aluminum Alloys 86

Chemical Technology 87

Single Device Equivalent to CMOS 87

Crosscutting Technologies 88-91

Fiber Sizing Sensor and Controller 88

High-Temperature Coating for Gas Turbine Components 88

High Temperature Refractory Ceramic 88

Hydrodyne Process for Tenderizing Meat 88

Insert Drill Having Three or More Flutes 89

Membrane Technology to Remove Entrapped Air from Ammonia Refrigeration Systems 89

Miniature, Inexpensive, Amperometric Oxygen Sensor 89

Nickel-Based Superalloy with Improved Weldability and Oxidation Resistance 89

Polymer-Dispersed Ferroelectric Smectic-C* Display Technology 90

Process Particle Counter 90

Radiation Barrier Heating Mantle for High-Temperature Furnaces 90

Self-Dressing Resistance Welding Electrode 90

The Road Patcher 91

Tough-Coated Hard Powders 91

Tribopolymerization as an Anti-Wear Mechanism 91

Wear Resistant Composite Structure of Vitreous Carbon Containing Convoluted Fibers 91

Forest Products Technologies 92

Christian Veneer Dryer 92

Linear Corrugating 92

Emerging Technologies (continued)

Glass Technologies 93-94

Enabling Tool for Innovative Glass Applications 93

Float Zone Silicon Sheet Growth 93

Frequency-Selective Solar Glazing System 93

High Throughput Vacuum Processing for Innovative Uses of Glass 93

Manufacturing Ceramic Products from Waste Glass 94

Metal Casting Technologies 95

Lost Foam Casting Quantifier Program 95

Three-Dimensional Objects by Photosolidification 95

Titanium Matrix Composite Tooling Material for Aluminum Die Castings 95

Mining Technologies 96

Lower-pH Copper Flotation Reagent System 96

Soft *(Unfired)* Ceramic Particles via Dynamic Cyclone Classification 96

Petroleum Technologies 97-98

Composite-Reinforced Pipe 97

Distillation Column Flooding Predictor 97

Distributed Optical Fiber Sensors for Continuous Liquid Level Tank Gauging 97

Method for Cutting Steam Losses During Cyclic Steam Injection of Wells 97

Process for Conserving Steam Quality in Deep Steam Injection Wells 98

Pulsed Laser Imager for Detecting Hydrocarbon and VOC Emissions 98

Well Bottom Fluid Implosion System to Stimulate Existing Well Flow 98

Steel Technology 99

Method of Making Steel Strapping and Strip 99

Solar Energy Technologies Program

Commercialized Technology

- PowerGuard® Photovoltaic Roofing System 102

Emerging Technology

- High-Intensity Silicon Vertical Multi-Junction Solar Cells 103

Wind & Hydropower Technologies Program

Emerging Technology

- Helical Reaction Hydraulic Turbine 106

Inventions & Innovation (I&I) uses the Tracking Task and Government Performance and Results Act (GPRA) as two of its major management tools. I&I uses the generation of GPRA numbers as an opportunity to work with grantees to determine their individual energy savings using uniform assumptions. The Tracking Task is I&I's opportunity to compare pre-award assumptions and expected energy savings to post-award reality. The resulting information impacts all phases of the program from the writing of the solicitation to the evaluation of the completed projects. The total number of steps where GPRA and Tracking analyses and results are involved include:

- Writing the solicitation,
- Evaluating the proposals in the source selection process,
- Determining the technology's relevance to all EERE sectors
- Determining the actual GPRA number (metric)
- Monitoring the grant
- Providing commercialization assistance
- Tracking the impacts of each grant, and finally
- Relaying the lessons learned from each steps of the process to the DOE Program Manager to enhance continuous improvement of the process.

Writing the Solicitation

The solicitation is revised every year to reflect "lessons learned" from the previous solicitation and feedback from the Tracking Impacts Team concerning "reasons for success and failure." Generally changes are minor but some major changes in emphasis have occurred over the lifetime of I&I. There is more emphasis on the commercialization strategy of the applicant and each applicant is required to articulate that strategy. The commercialization steps already taken by the applicant are also considered in the evaluation. Recent solicitations have put more value on a marketing plan and the applicant's prior experience in technology and commercialization activities.

Another major change has been the increased documentation of energy savings methodologies and the definition of the "commercially available unit of production". The applicants are now required to make comparisons to existing commercially-available technologies.

Evaluating the Proposals in the Source Selection Process

As stated previously, the solicitation is in a continuous state of improvement based on feedback from the quantitative and qualitative portions of the GPRA. The changes in the solicitation have been designed to make it easier for the reviewer to adequately and fairly judge the invention's energy savings compared to the savings of existing and commercially available technologies. Since grantees are required to provide the percentage improvement over the state-of-the art technology, reviewers have an easy check to any calculations they have done for a proposal they are reviewing.

In addition to the above, category 2 applications are now required to quantitatively discuss the invention's economic and environmental benefits over competing/existing and commercially available technologies in much detail. Quantifiable benefits may include reductions in CO_2 emissions, elimination of waste production at the source, cost of a manufactured unit, etc. Also discussed are improvements in quality and productivity achieved through use of the technology, impacts of the technology on employment, etc. as compared to competing/existing, state-of-the-art, and commercially available technologies.

Another major feedback addition to the solicitation is the inclusion of a task/milestone chart that estimates commercialization achievements at 6 months, 1 year and at the end of the project.

Lastly, the technical and commercialization experience of key personnel has been included in the criteria for selection so that reviewers can adequately judge the business and technical skills and experience of the grant team.

Determining EERE Relevance by DOE Program Managers

As part of the lengthy selection process, I&I gives the relevant EERE Program Manager the opportunity to review every proposal within their group's technical scope for relevance to the Program. This review enables the Program Manager to eliminate grant proposals that are outside the scope of the Program. It also familiarizes the Program Managers with potential I&I grants that could enhance their ongoing portfolios.

Calculating the Actual GPRA Number

The GPRA numbers are determined by the energy-savings impact of each I&I technology using a model developed by the DOE Industrial Technologies Program for application to industrial technologies. The National Energy Modeling System (NEMS), used for most of the analysis within EERE, does not have a detailed industrial sector. Only part of one proposal from this year's I&I solicitation could be analyzed with NEMS alone. Each year I&I technologies are selected in a competitive procurement process. The selection process focuses on each technology's advantage over current practice, with an emphasis on energy savings.

Where possible, market segments are compared with the Energy Information Administration's (EIA's) Annual Energy Outlook 2001, for baseline energy consumption and segment growth rate. I&I has collected data on the impacts of its selected technologies for many years. This data is used to determine market segments and place practical limits on market penetration. Model inputs are discussed with each inventor and the inventor approves in writing the final market penetration estimate.

Target market description:
Market segments are selected from public sources as appropriate for each technology. Market limitations are introduced to better represent the true target of the technology. The EIA forecast of energy prices and electric power fuel mix are used for all cases.

Calculation walk through:

1) Annual market size is calculated from initial market size in "technical units" multiplied by market limitation fractions and adjusted for market growth.

2) Annual market is multiplied by the market share from the selected "s curve" to derive annual sales.

3) Annual installed capacity is the total of sales to date in technical units.

4) Energy savings are calculated by fuel type from the difference in performance coefficients between the new and current technology technical units.

5) Other impacts are calculated from EIA prices and environmental coefficients multiplied by changes in annual fuel use.

Monitoring the Grant

GPRA has another ancillary benefit, it allows the grantee and the Grant Monitors at the Golden Field Office (GFO) to share a common vision of what the anticipated energy savings from each grant will be.

Tracking the Impacts

I&I's return on investment is $73.85 worth of energy saved for each $1 invested by the Federal government. As of 2003 I&I achieved a total energy savings of 1.58 quadrillion Btu for the U.S. economy. Converted to dollars, this equates to $9.6 billion. I&I has had a total appropriation of $129.8 million since its inception. This amount is used instead of the actual grant amount resulting in a conservative return on investment number.

I&I has assessed the impacts of its grant program since its inception. Primarily, the impacts have been Btu saved and the resultant environmental impacts. In addition, I&I projects have resulted in jobs created, products improved, safety enhanced, and positive impacts on U.S. competitiveness in the world marketplace.

Continuously Improving the Process through Analysis

The most important aspect of the use of GPRA as a management tool is the ability to quantitatively evaluate all the grants individually or as a group or subgroup because the data inputs have been determined using a common methodology. That allows the Program Manager to see the change in quantitative outcomes from the grantee's determination in the proposal, to negotiated GPRA metric, and finally to the calculated impacts metric. Over time, analysis of these success factors has led to changes in the solicitation. The most important of these changes is the weight given for energy savings, market knowledge, and for a clear understanding of the technical advantages of the grantee's invention versus the state-of-the-art technology already in the marketplace.

There are many aspects to determining the GPRA number. They include:

- the actual physical per unit energy use improvement in the product or process,
- the extent of the total U.S. and worldwide market (units) for the technology,
- the determination of attributes of the state-of-the-art technology being sold,
- the determination of the years to obsolescence in a particular market,
- the segmentation of the total market to that market for which the grantee's invention is suited, and finally,
- the determination of what the invention's percentage of total energy savings is and when it is probably obtainable

Another important outcome of GPRA is the continual development of an expanding database of success and failure indicators. These indicators range from something so simple as ability of the grantee to describe their technology in terms of what it improves rather than what it does to the amount of business and market experience that the grantee or their dedicated team have.

Biomass Program Company	Title	Cumulative Energy Savings *(10^{12} Btu)*	Current 2003 Energy Savings *(10^{12} Btu)*
Alex-Tronix Controls	Irrigation Valve Solenoid Energy Saver	0.011	0.004
Bio-Process Innovations, Inc.	Continuous Cascade Fermentation System for Chemical Precursors	0.703	0.074
Rome Plow Company	Stalk and Root Embedding Plow	0.082	0.019
TOTAL - Biomass Program		**0.796**	**0.097**

Building Technologies Program Company	Title	Cumulative Energy Savings *(10^{12} Btu)*	Current 2003 Energy Savings *(10^{12} Btu)*
Advanced Conservation Technology – ACT, Inc./Metlund Systems	D'MAND® Hot Water Recirculating and Waste Prevention System	0.604	0.333
AlasCan, Inc./Equaris Corporation	Composting Toilet and Greywater Treatment System	0.000	0.000
American Solar Network, Ltd./ SolarRoofs.com	The Solar SKYLITE Water Heater	0.076	0.000
Amhome USA, Inc.	Method of Constructing Insulated Foam Homes	0.027	0.005
Beacon Light Products, Inc.	Electronic Starter Device for Fluorescent Lamps	3.101	1.095
Bi-Glass Systems	Guide for Window Routing Device	0.520	0.000
Conserval Systems, Inc	SOLARWALL® Air Preheating System	0.076	0.000
Custom Electronics, Inc.	The Energy Saver Gas-Broiler Control	0.000	0.000
Davis Energy Group, Inc./ Integrated Comfort, Inc.	Nightsky – A New Roofing Technology	0.002	0.000
Enerzone Systems Corporation/ RetroZone, Inc.	Selective Zone Isolation for HVAC Systems	0.305	0.000
Heat Pipe Technology, Inc.	High-Efficiency Dehumidifier	1.384	0.000
KaiRak, Inc.	Refrigerator with Pan Chiller System	0.000	0.000
Lite-Form International	Improved Poured Concrete Wall-Forming System	0.978	0.192
Lof Energy Systems, Inc.	System for Reducing Heat Losses from Indoor Swimming Pools by Use of Automatic Covers	0.000	0.000
Melink Corporation	Restaurant Exhaust Ventilation Monitor/Controller	0.369	0.159
PowerLux® Corporation	PowerRim™ High Wattage Energy Saving Compact Fluorescent Lamp *(CFL)* Adaptor for Recessed Downlights	0.000	0.000
SatCon Technology Corporation	High-Speed, Permanent Magnet Motor	0.000	0.000
Solid State Heating Corporation, Inc.	Direct Source-to-Object Radiant Heating Panels	1.447	0.000
The Romine Co.	RR-1 Insulating Screw Cap	0.006	0.002
The Ultimate R Inc.	Insulation Containment Apparatus – The Ultimate R	0.000	0.000
Transmet Corporation	Aluminum Roofing System	0.650	0.000
Ultraflo Corporation	Ultraflo Automated Plumbing System	0.000	0.000
Wallace Energy Systems	Wallace Energy Systems' Solar-Assisted Heat Pump Water Heater	0.118	0.000
WaterFilm Energy, Inc.	Waste Fluid Heat Recovery System	0.063	0.023
Yellowstone Environmental Science, Inc./Renaissance Instruments, Inc.	Portable Wastewater Flow Metering Device	0.000	0.000
TOTAL - Building Technologies Program		**9.726**	**1.809**

Distributed Energy Program Company	Title	Cumulative Energy Savings *(10^{12} Btu)*	Current 2003 Energy Savings *(10^{12} Btu)*
Rainier Hydraulics, Inc.	Portable Automatic Firewood Processor	0.000	0.000
TOTAL - Distributed Energy Program		**0.000**	**0.000**

FreedomCAR and Vehicle Technologies Program Company	Title	Cumulative Energy Savings *(10^{12} Btu)*	Current 2003 Energy Savings *(10^{12} Btu)*
Able Boat, Inc./Air Ride Craft, Inc.	SeaCoaster	0.000	0.000
Energy Conversions, Inc.	Dual Fuel Energy Conversion System for Diesel Engines	0.000	0.000
NCF Industries, Inc.	Fuel Transport Modules	0.000	0.000
Pony Pack, Inc.	Auxiliary Air-Conditioning, Heating and Engine Warming System for Trucks	19.915	0.000
Structural Composites Industries, Inc.	Light Weight Composite Trailer Tubes	0.000	0.000
TOTAL - FreedomCAR and Vehicle Technologies Program		**19.915**	**0.000**

Industrial Technologies Program Company	Title	Cumulative Energy Savings *(10^{12} Btu)*	Current 2003 Energy Savings *(10^{12} Btu)*
Aluminum			
Alcovery Technologies, LLC/ Q.C. Designs, Inc.	Aluminum Reclaimer for Foundry Applications	0.001	0.000
MSS, Inc.	Aluminum-Rich Concentrate from Municipal Waste	0.000	0.000
Micropyretics Heaters International, Inc.	High-Capacity Melt Furnace	0.000	0.000
TOTAL - Aluminum		**0.001**	**0.000**
Chemicals			
EcoShield Environmental Systems, Inc.	Aqueous Cleaner and CleanRinse™ Recycling System	0.104	0.015
Montec Research, Inc./ Resodyn Corporation	Low-Frequency Sonic Mixing Technology	0.000	0.000
TOTAL - Chemicals		**0.104**	**0.015**
Forest Products			
Combustion Specialists, Inc./ Enertechnix, Inc.	Detection and Control of Deposition on Pendant Tubes in Kraft Chemical Recovery Boilers	0.176	0.132
Dieter Bryce, Inc./ Morgan Industries, Inc.	Removal of Bark from Whole Logs	0.132	0.012
Drying Technology, Inc.	Delta T Dryer Control System	17.466	17.421
Lenox Polymers	Lignin Separation and Epoxide-Lignin Manufacturing	0.000	0.000
Merrill Air Engineers	Thermodyne™ Evaporator – A Molded Pulp Products Dryer	0.000	0.000
TOTAL – Forest Products		**17.774**	**17.565**

Industrial Technologies Program Company	Title	Cumulative Energy Savings *(10^{12} Btu)*	Current 2003 Energy Savings *(10^{12} Btu)*
Metalcasting			
Bonal Technologies, Inc.	Meta-Lax Stress Relief Process	136.250	27.550
Materials and Electrochemical Research *(MER)* Corporation	Ceramic Composite Die for Metal Casting	0.000	0.000
Michael Feygin Company/ Cubic Technologies, Inc.	Laser-Based Laminated Object Manufacturing	0.000	0.000
TOTAL - Metalcasting		**136.250**	**27.550**
Mining			
Transtek, Inc.	Wireless Telemetry for Mine Monitoring and Emergency Communications	0.000	0.000
University of Missouri – Rolla and StemTite, LLC/ BF Carr & Associates	A Mechanical Stemming Device for Use in Explosive Loaded Blast Holes	0.000	0.000
TOTAL - Mining		**0.000**	**0.000**
Petroleum			
Compressor Controls Corp.	System 100® Compressor Controls	412.659	0.000
Double M Electric, Inc.	Oil Well Power Controller	0.000	0.000
Energy Concepts Company	Absorption Heat Pump/Refrigeration Unit	1.928	0.306
Industrial Screen & Maintenance, Inc.	The Mud Devil Deaerator Mixer	0.000	0.000
Maverick Petroleum Corp.	Method and Apparatus to Revive Gas Wells	0.000	0.000
MCR Oil Tools Corporation	Radial Cutting Torch (RCT) – Pipe Cutting Apparatus	0.000	0.000
Okie-Yoke, Inc./Frank's Casing Crew & Rental Tools, Inc.	Casing Stabbing Apparatus	0.000	0.000
Palmour Group/ Barrier Fluid Technologies	Reciprocating Rod Pump Seal Assembly	0.000	0.000
Ruska Instrument Corporation/ Chandler Engineering, LLC	Mercury-Free PVT Apparatus for Thermophysical Property Analysis of Hydrocarbon Reservoir Fluids	0.000	0.000
Sanford and Russell Associates/ Weatherford Completion and Production Systems	The Russell Self-Piloted Check Valve	0.000	0.000
Servo-Dynamics, Inc.	Dynamic Gas Pulse Loading System	0.000	0.000
The LATA Group, Inc.	New Technology for Sulfide Reduction and Increased Oil Recovery	0.000	0.000
Tubular Ultrasound, Inc.	A Unique Method of Inspecting Oil Country Tubular Goods	0.000	0.000
Vilter Manufacturing Corp.	V-PLUS™ Refrigerant Oil Cooling System	1.004	0.090
TOTAL - Petroleum		**415.591**	**0.396**

Industrial Technologies Program Company	Title	Cumulative Energy Savings (10^{12} Btu)	Current 2003 Energy Savings (10^{12} Btu)
Steel			
Green Technology Group	Recovery of Acids and Metal Salts from Pickling Liquors	0.010	0.001
Kress Corporation	Method and Apparatus for Handling and Dry Quenching Coke	0.000	0.000
TOTAL - Steel		**0.010**	**0.001**
Crosscutting			
Advanced Refrigeration Technologies, Inc.	Evaporator Fan Controller for Medium-Temperature Walk-In Refrigerators	0.038	0.015
Aeroproducts International, Ltd./ Smedberg Machine Corporation	Aerocylinder Replacement for Single-Action Cylinders	0.346	0.000
Carsonite International Corporation	Carsonite Noise Barrier Wall	0.000	0.000
Dynamic In-Situ Geotechnical Testing, Inc.	Torsional Cylindrical Impulse Shear Soil Test for Earthquake Design	0.000	0.000
Ecomat, Inc./Century-Board USA	Foamed Recyclables	0.000	0.000
Energy Research Company	In-Situ, Real Time Measurement of Melt Constituents	0.037	0.037
John Darden/Peripheral Mowers, Inc.	Peripheral Mower Blade	0.000	0.000
Kemco Systems, Inc.	High-Efficiency Direct-Contact Water Heater	341.400	0.000
Other Manufacturers	High-Efficiency Direct-Contact Water Heater	341.400	0.000
Kemp Development Corporation	Diffusion and Thermal Heat Treatment of Bulk Powders	0.000	0.000
Mobile Zone Associates	Mobile Zone Optimized Control System for Ultra-Efficient Surface-Coating Operations	0.017	0.007
Superior I.D. Tube Cleaners, Inc./ GE Infrastructure Water and Process Technologies	SIDTEC™ Condenser Maintenance Program	135.555	38.796
Turbocare/ Demag Delaval Corporation	Retractable® Labyrinth Packing Seals for Turbine Shafts	74.064	0.000
WeldComputer Corporation	WeldComputer™ Resistance Welder Adaptive Control	0.000	0.000
TOTAL - Crosscutting		**892.857**	**38.855**
TOTAL - Industrial Technologies Program		**1462.587**	**84.382**

Solar Energy Technologies Program Company	Title	Cumulative Energy Savings (10^{12} Btu)	Current 2003 Energy Savings (10^{12} Btu)
Bio-Energy Systems, Inc.	SolaRoll® Solar Collector System	25.735	0.000
PowerLight Corporation	PowerGuard® Photovoltaic Roofing System	0.236	0.099
TOTAL - Solar Energy Technologies Program		**25.971**	**0.099**
GRAND TOTAL		**1518.995**	**86.387**

Commercialized Technologies

- Continuous Cascade Fermentation System for Chemical Precursors 16
- Irrigation Valve Solenoid Energy Saver 17
- Stalk and Root Embedding Plow 18

Emerging Technology

- BEI Cellulose Hydrolysis Process 19

Continuous Cascade Fermentation System Increases Yields and Cuts Process Time for Converting Carbohydrates to Ethanol and other Chemical Precursors

With assistance from DOE's Inventions and Innovation Program, Bio-Process Innovation (BPI), Inc. developed a proprietary cascade reactor for ethanol production from carbohydrate feedstocks that eliminates the need to fill, empty, and wash a fermenter as part of a batch operation. Feed is introduced continuously into the first of three to five stirred reactors placed in series, with the outflow of one reactor flowing into the next reactor. The effluent from the reactor is then taken to a low-energy solvent absorption/extractive distillation system for separating and purifying ethanol. Separating the ethanol as it is produced increases the rate of ethanol production. BPI, Inc., also developed a highly flocculent yeast that further speeds the reaction of sugar to ethanol by maintaining cell densities of over 30 grams/liter. Continuous operations can more than double the fermentation capacity of a batch ethanol facility.

A five-stage unit of 40,000 gallons reactor volume has been operating at an Iowa site since June 1996 on waste starches/sugars. It produces about 1 million gallons of ethanol per year. A small pilot unit operating on cellulosics is currently being tested at BPI, Inc. A small plant in Wisconsin is using this technology to convert permeate mother liquor to ethanol.

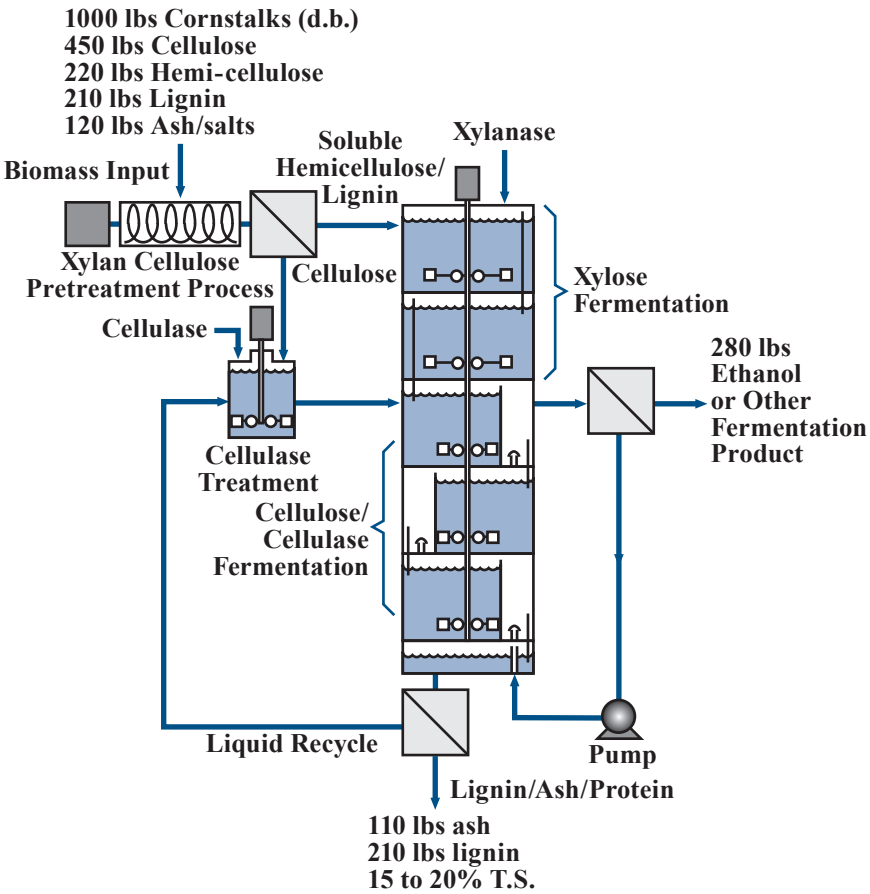

Commercialized Fermentation Technology Applied to Emerging Concept of Biomass Fermentation

Overview

- Commercialized by Bio-Process Innovation (BPI), Inc. in 1996
- Over 7 years operational experience
- 1 United States installation operating in 2003

Energy Savings

(Trillion Btu)

Cumulative through 2003	2003
0.703	0.074

Emissions Reductions

(Thousand Tons, 2003)

Particulates	SO_X	NO_X	Carbon
0.0	0.0	0.0	1.56

Applications

Converting carbohydrate feed stocks, which comprise 65% of municipal solid waste, to ethanol or other chemical precursors

Capabilities

- Continuous rather than batch system allows quick and complete saccharification and fermentation of feedstocks and removal of ethanol into a gas phase as it is produced.
- Uses abundant cellulosics as a feedstock for alternative chemical precursors.

Benefits

Productivity

Conventional reactor processing time of 36 to 48 hours is reduced to 24 hours or less. Dramatically improves throughput by maintaining a high cell density in the reactors and operating continuously.

Profitability

Lowers the cost of producing ethanol or other fermentation chemicals from carbohydrates by cutting production labor. Can be retrofitted on fermenters currently in use in batch-process ethanol production facilities.

Contact: Bio-Process Innovations, Inc. - M. Clark Dale - (765) 746-2100 - bpidate@concentric.net

New Solenoid Controller for Irrigation Valves Saves Energy

A battery operated, multi-station, irrigation valve control unit was developed with funding from DOE's Inventions and Innovation Program. The Battery Control System (BCS) uses low-powered, latching solenoid controllers with internal batteries that last for a minimum of 5 years.

Automated irrigation systems with latching solenoid controllers require a constant flow of electricity to keep the valves operating. A battery sends power surges to the solenoid as needed to open and close the valves. The BCS available from Alex-Tronix Controls uses the SWELL solenoid power saver. With the SWELL unit, the inrush and holding current requirements are only about 10% that of most other solenoids. The SWELL's greatly reduced inrush and holding current requirements allows valves to be operated at much longer distances. The BCS can operate valves reliably out to a distance of almost 20 miles. Other battery-powered controllers are limited in distance to about 1000 feet. Up to five valves can be operated simultaneously with a single irrigation controller. The solenoid coil never burns out because there is no power in the coil.

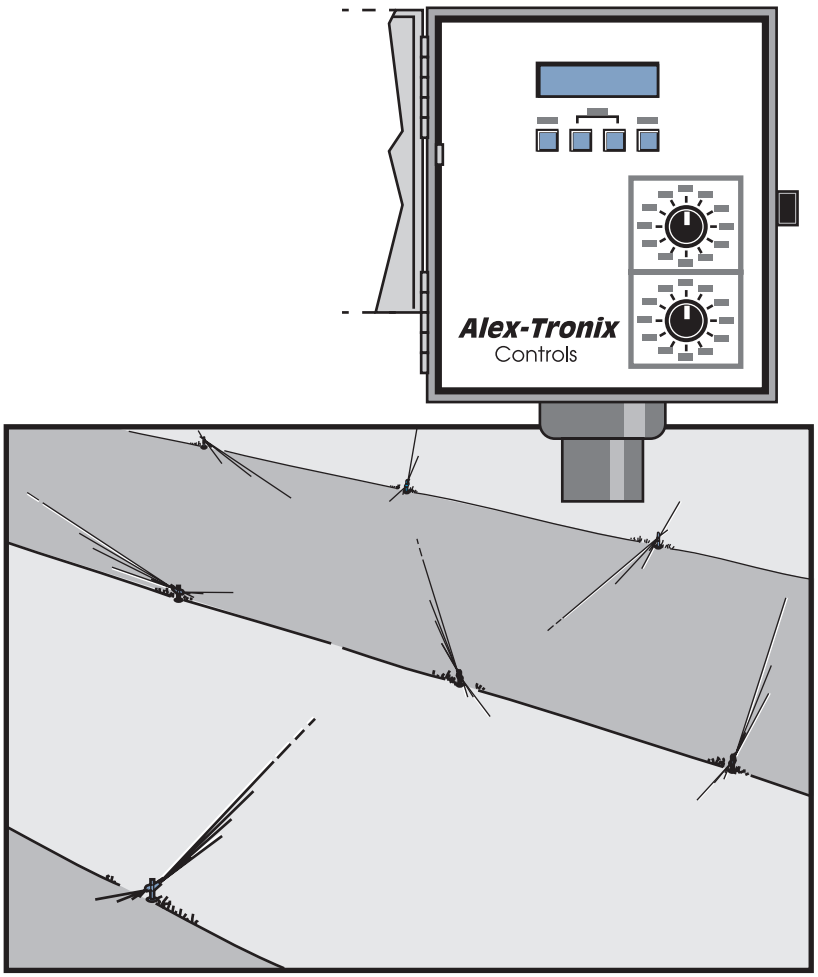

Battery Control System for Irrigation Valves

Overview

- Developed and being marketed by Alex-Tronix Controls
- Commercialized in 1999 with over 2200 units in the field
- Proven operation in laboratory and field tests

Energy Savings

(Trillion Btu)

Cumulative through 2003	2003
0.011	0.004

Emissions Reductions

(Thousand Tons, 2003)

Particulates	SO_X	NO_X	Carbon
0.0	0.001	0.001	0.07

Applications

For sprinkler systems in medians, schools, shopping malls, golf courses, parks, agricultural and industrial applications

Capabilities

- Operates valves out to about 20 miles.
- Eliminates the energy and primary wiring needed to operate an irrigation system.
- Technology has 10 times the battery life and 100 times the operating distance of any other controller.

Benefits

Ease of Installation

Controllers can be installed anywhere. There is no need to install electrical meters or to use licensed electricians for installation.

Safety

There are no electrical safety concerns. Power surge and lightning-related problems associated with primary power leads are eliminated because there is no need for primary wiring.

New Stalk and Root Embedding Plow Prevents Post Damage and Saves Time in Preparing Fields

Disposing of cotton stalks and roots in the field after harvest is an energy-intensive operation. Nationwide, many cotton farmers use conventional tillage practices that involve shredding the stalks and making several tillage passes over the field to prepare a new seedbed. These tillage operations consume over one-half of farmers' annual fuel budget, and most farmers are frustrated with the high costs and time requirements. Over the last 50 years, farmers have tried several alternative tillage systems, all of which involve uprooting the cotton plants and mixing the crop residue into the soil. All uprooters have shortcomings, and none have gained wide acceptance across the Cotton Belt.

With assistance from DOE's Inventions and Innovation Program, the University of Arizona invented the Pegasus system—a stalk, root, and agricultural debris-burying tillage machine suited for burying row crops, especially cotton, to prevent pest damage and prepare fields for crops. The rapid plow-down design is a breakthrough in cotton tillage. A narrow moldboard plow opens a deep trench in the soil next to the crop row. Then a "stuffer disk" inserts the roots and stalks into the deep trench. The whole stalks are buried in a "rope" bundle under the bed where they decompose. The machine also forms new beds, leaving the field ready for the next crop.

Rigorous research by the United States Department of Agriculture indicates dramatic savings in cost, time, and energy. There are no adverse effects. Yields with the Pegasus have ranged from the same as conventional methods to 12% greater than conventional methods.

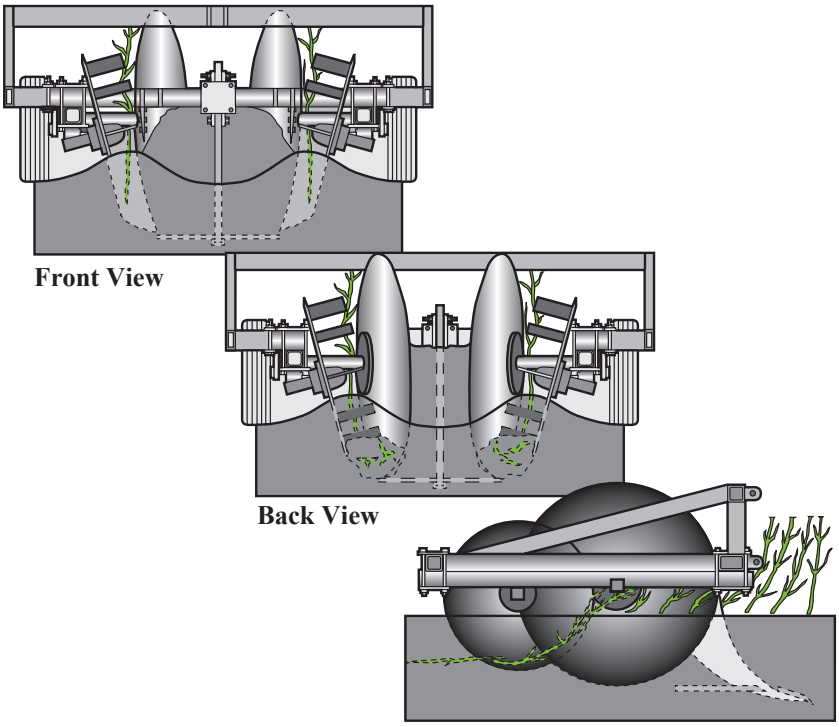

Stalk and Root Embedding Plow

Overview

- Invented by the University of Arizona and being sold by the Rome Plow Company
- Commercialized in 1996
- 71 units operating in 2003

Energy Savings

(Trillion Btu)

Cumulative through 2003	2003
0.082	0.019

Emissions Reductions

(Thousand Tons, 2003)

Particulates	SO_X	NO_X	Carbon
0.0	0.0	0.0	0.410

Applications

- Breakthrough tillage technology for agriculture
- Cotton and other row-crop tillage

Capabilities

- Deeply entrenches whole stalks and roots into soil in one pass, eliminating need to shred stalks.
- Plows 7 acres/hour at 4.0 to 4.5 mph.

Benefits

Air Emissions Reductions

Eliminates stalk shredding, a large contributor to dust emissions, and cuts engine air emissions by 70% compared with conventional tillage practices.

Productivity

Requires 75% to 80% less time to dispose of crop residue and prepare a new seedbed compared with conventional tillage practices. Saves 4 to 7 repeat passes of tillage machinery to work and prepare fields. Results in cost savings of $50/acre compared with conventional tillage practices.

Contact: Rome Plow Company - Steve Arrington - (800) 241-7860 - sarrington@romeplow.com

BEI Cellulose Hydrolysis Process

The BEI Cellulose Hydrolysis Process uses a double tubular reactor that is precisely controlled to convert cellulose into a high sugar content material. The second stage of the process also recovers heat and chemicals that can be reused in the first stage, thereby providing energy and economic savings. The process hydrolyzes cellulose to pentose, hexose, or glucose sugars at the point of use. These sugars may then be yeast-fermented to ethanol or other organic chemicals as commercial products.

Contact: **Brelsford Engineering, Inc.**
8655 Bridger Canyon Road
Bozeman. Montana 59715

Donald Brelsford
Telephone: 406-586-7272
Email: brelsfordengine@aol.com

Commercialized Technologies

- Aluminum Roofing System 22
- D'MAND® Hot Water Recirculating and Waste Prevention System 23
- Electronic Starter Device for Fluorescent Lamps 24
- Guide for Window Routing Device 25
- High-Speed, Permanent Magnet Motor 26
- Improved Poured Concrete Wall-Forming System 27
- Method of Constructing Insulated Foam Homes 28
- Restaurant Exhaust Ventilation Monitor/Controller 29
- RR-1 Insulating Screw Cap 30
- Selective Zone Isolation for HVAC Systems 31
- The Solar SKYLITE Water Heater 32
- Ultraflo Automated Plumbing System 33
- Wallace Energy Systems' Solar-Assisted Heat Pump Water Heater 34

Emerging Technologies

- Cromer Cycle Air Conditioner 35
- Electronic High-Pressure Sodium Ballast 35
- GibBAR-Wall™ System 35
- Inner Roof Solar System 36
- Simple Control for Single-Phase AC Induction Motors in HVAC Systems 36
- Variable Speed, Low Cost Motor for Residential HVAC Systems 36

New Roofing Chips Create Affordable, Energy-Efficient Aluminum Roofing System

Through a grant from the Department of Energy's Inventions and Innovation Program, Transmet Corporation developed aluminum roofing chips that exhibit superior solar reflectance compared with competing roofing systems. The chips are tiny aluminum particles made in a proprietary process that rapidly solidifies small streams of liquid metal. When air is sprayed at a rate of 3 to 4 lb/sq. ft. onto the surface of the asphalt flood coat, the chips form a highly reflective roof surface. The chips weigh only 3 to 4 pounds/100 square feet compared with stone aggregate coverings of 300 pounds/100 square feet.

Factory applications of aluminum chips to rolled roofing materials are gaining acceptance. In most cases, only minor adjustments to the manufacturer's granule equipment are needed to account for the different flow properties of chips compared with granules.

Benefits

Energy Savings

Reduces building heat conductivity by up to 35%, keeping the building cooler. Covering one small commercial roof with a surface area of 10,000 square feet would result in annual energy savings of 79 million Btu.

Product Quality

Greatly extends roof life by reflecting 77% of incoming infrared solar energy and 75% of ultraviolet energy. Accelerated aging tests have shown negligible deterioration of the reflectivity and emissivity properties.

Profitability

Reduces maintenance costs. Eliminates the need for recoating. Saves as much as $10/100 square feet compared with asphalt.

Aluminum Roofing System

Overview

- Developed by Transmet Corporation
- Commercialized in 1984
- Installed on more than 35 million square feet of roof

Energy Savings

(Trillion Btu)

Cumulative through 2000	2000
0.650	0.014

Emissions Reductions

(Thousand Tons, 2000)

Particulates	SO_X	NO_X	Carbon
0.0	0.002	0.002	0.249

Applications

- Roofing for industrial, commercial, and institutional buildings
- Filler for plastics to enhance thermal and electrical properties
- Feedstock for chemical processes that require aluminum content
- Shot-blasting media for aluminum products

Capabilities

Rapidly solidifies liquid metal to produce air-sprayable small particles.

Contact: Transmet Corporation - Tom Fee - (614) 276-5522 - sales@transmet.com

D'MAND® Hot Water Recirculating and Waste Prevention System

D'MAND System Reduces Water Heating Energy Requirements and Water Waste

In conventional potable hot water systems, water standing in the pipe is sent down the sewer drain until heated water arrives, wasting water. A conventional re-circulating system is also wasteful because unused, re-circulated, heated water rejects heat through the entire loop.

With the assistance of the Department of Energy's Inventions and Innovation Program, Advanced Conservation Technology (ACT), Inc., developed a novel system that conserves water and energy in water-heating systems. The Metlund® Hot Water D'MAND system returns water in the hot water pipe to the boiler or water heater through the cold-water line. The system employs a thermal sensor so the fixture demanding hot water only receives when the sensor observes a preset rise in temperature. Retrofit installations are simple because no additional return pipe to the water heater is required. In the residential D'MAND pumping system, the high-performance pump, integrated controller and electronic zone valve are located at the hot water fixture most distant from the water heater. In residential new construction, they are generally located at the water heater, but still operate on demand.

In industrial and commercial installations, each point-of-use fixture can be set up to operate manually, or can include motion detectors or flow switches so that circulation begins the moment a worker enters the facility. The system shuts off automatically when hot water is not needed. Commercial applications include doctor's offices, hospitals, veterinary clinics, kitchens, salons, day care facilities, and restaurants. Industries are using the system in factory tool shops, restrooms, and for periodic parts washing stations that use a second occupancy sensor to start the water stream when the parts appear under the faucet.

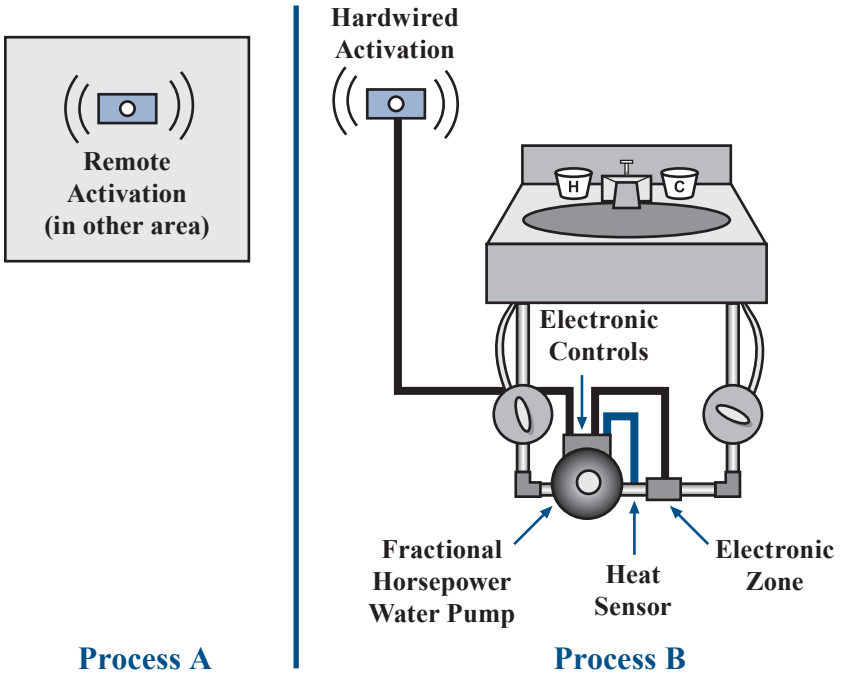

D'MAND Water Heating Sensor System

Overview

- Developed by Advanced Conservation Technology, Inc.
- Commercialized in 1991
- More than 33,000 units sold through 2003

Energy Savings

(Trillion Btu)

Cumulative through 2003	2003
0.604	0.333

Emissions Reductions

(Thousand Tons, 2003)

Particulates	SO_X	NO_X	Carbon
0.003	0.133	0.052	6.89

Applications

Can be used in single- and multi-family residential water heating systems, both retrofit and new construction; commercial and institutional water heating systems; and industrial process and service hot water systems.

Capabilities

Can be easily retrofitted into existing water heating systems regardless of fuel type and with tank and tankless water heaters.

Benefits

Natural Resources

Has saved more than 1.2 billion gallons of water through 2003.

Profitability

Reduces capital cost and operating costs compared with recirculating system. Has saved more than $15 million through 2003. Reduces standby losses and extends water heater life.

New Quick Start Module™ Lowers Acquisition and Operating Costs for Fluorescent Technology

Beacon Light Products, Inc. designs, develops, and manufactures miniature electronic controls for lighting and other power applications. Through a grant from DOE's Inventions & Innovation Program, Beacon Light Products developed a quick and reliable electronic lamp starter for small fluorescent applications. Beacon's Quick Start Module (QSM™) represents state-of-the-art performance, reliability, and miniaturization for fluorescent lamp starters. Sophisticated micro-controller chips and custom high voltage thyristor technology are assembled on ceramic hybrid chip and wire substrates for high-reliability applications. The technology is an important improvement for lower wattage fluorescent lamps which still use older preheat circuit designs.

The technology provides superior performance to other electronic starters because QSM's application-specific integrated circuit gives the QSM a very fast start. Other features include a broad voltage operating range and safety shutdown of burned-out fluorescent lamps without flickering. Use of the inexpensive and easily installed QSM can double the life of a fluorescent lamp.

Benefits

Ease of Installation

Is easily inserted into a conventional glow bottle canister or a compact fluorescent lamp.

Energy Savings

Makes using fluorescent lamps, which save energy, more desirable. Applications that choose fluorescent lighting will cut electricity use by at least 50% over incandescent lighting.

Pollution Control

Fewer lamps and glow bottle starters containing toxic chemicals end up in landfills. Fluorescent bulbs contain mercury-laden phosphor powder. Disposal of over 1 million bulbs per year result in over 90,000 pounds of mercury entering our environment each year (about 1 oz per bulb).

Productivity

Extends lamp life, thereby reducing maintenance and associated downtime needed to change burned-out light bulbs. For industrial and commercial users, the labor savings could range from dollars to hundreds of dollars per bulb, depending on how difficult they are to replace.

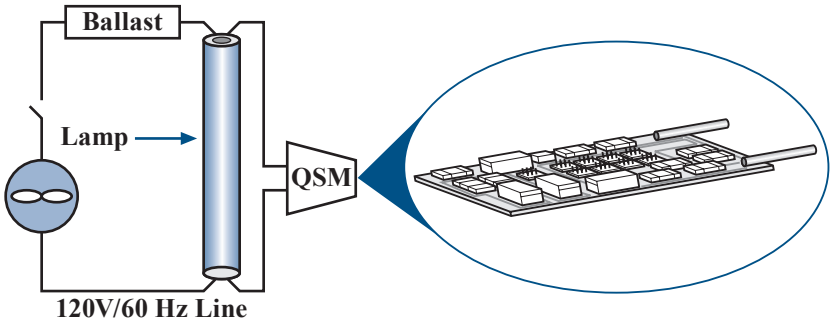

Quick Start Module

Overview

- Developed by Beacon Light Products, Inc.
- Commercialized in 1999
- 1.6 million units sold through 2003

Energy Savings

(Trillion Btu)

Cumulative through 2003	2003
3.10	1.10

Emissions Reductions

(Thousand Tons, 2003)

Particulates	SO_X	NO_X	Carbon
0.005	0.237	0.176	21.5

Applications

- Low cost, high-performance fluorescent lamp starter
- Wide range of lighting applications from 5 to 40 watts

Capabilities

- Replaces glow bottle starters for fluorescent lamps.
- Lowers the operating cost of fluorescent technology.
- Contains no toxic chemicals.

Contact: Beacon Light Products, Inc. - Ron Porter - (208) 888-5905 - RPORTER@beacon-light.com

Window Routing Device Turns Existing Single-Pane Wood Windows into Energy-Efficient, Double-Pane Low-E Windows

Renovating homes, especially historic homes, is a tricky and onerous task. The desire to retain the character of the building, and in some cases, the actual historic material, competes with the desire to improve energy performance. With a grant from the Department of Energy's Inventions and Innovation Program, Bi-Glass Systems developed a tool guide to control the operation of a router for converting single-glazed wooden-framed windows into double-glazed windows. Single-pane glass can thus be replaced with panes that are more energy-efficient without replacing the sash members or the entire window.

In a Bi-Glass conversion, the original window sash is removed from the frame by a trained technician. The sash is taken to a mobile workshop. Here the technician uses the patented tool package to route out the old window putty and glass. This makes room for the new, insulated glass, which is installed using glazing tape and caulking. The interior grillwork remains intact and virtually unchanged. In addition, technicians install new jambliners, weather-stripping, insulation, and locks to eliminate all drafts. The sashes are then reinstalled into their openings and adjusted to fit snugly. The result is an estimated 20% annual reduction in energy costs for a house where all windows are upgraded.

Benefits

Ease of Installation

The window sash is quickly removed and replaced. The Bi-Glass window conversion takes place in a mobile workshop within hours.

Pollution Control

With the Bi-Glass System, the home's existing window-sash is reused instead of sending debris to the landfill or using virgin materials.

Productivity

The labor is more for Bi-Glass, but materials costs are much lower. The typical Bi-Glass conversion is priced 25% to 100% below traditional vinyl, aluminum or wood/wood-clad installed prices.

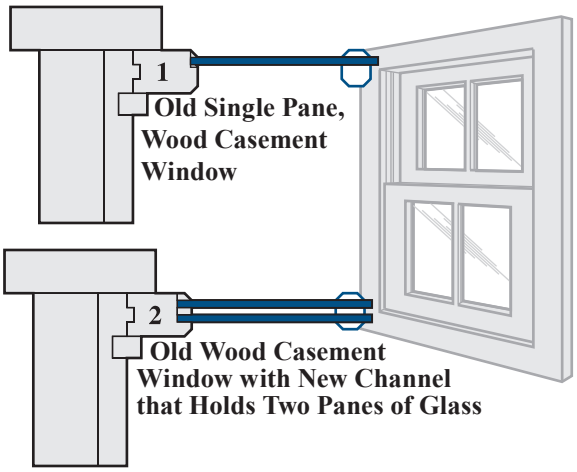

Before and After Cross Section of Treated Window

Overview

- Available from Bi-Glass Systems
- About 10 United States and 4 British licensees
- Commercialized in 1993

Energy Savings

(Trillion Btu)

Cumulative through 2002	2002
0.520	0.103

Emissions Reductions

(Thousand Tons, 2002)

Particulates	SO_X	NO_X	Carbon
0.0	0.013	0.013	1.79

Applications

- All window installations, especially those wishing to maintain the "look" of existing windows
- Allows renovating an old sash instead of replacing the window with a new one
- Approved for use in historic districts

Capabilities

- The Bi-Glass System works with all styles of wooden windows. Classic structures are easily restored to earlier beauty with newfound efficiency, while meeting the strictest of historical guidelines.
- Patented router guide increases the size of the rabbit joint in a single-pane wooden window for double-glazing.

New Motor Drive Increases System Efficiency by Allowing Variable Speed Motor Operation

Since rooftop air conditioners were introduced decades ago, alternating current motors have been driving their compressors. Only a few minor modifications have been made to these systems over the years. However, concern over environmental impacts of energy use and growing market demand for cooling are stimulating investment in making air conditioning systems more efficient. Meanwhile, worldwide pressure to improve performance efficiency and minimize the environmental impact of products has sparked the need to rethink the delivery process of conditioned air.

SatCon Technology has developed an improved motor technology with the help of a grant funded by DOE's Inventions and Innovation Program. The new motor drive has been developed and tested as part of a high-speed centrifugal compressor unit. Additional applications include the semiconductor manufacturing industry and high-temperature systems. The new technology increases the efficiency of air conditioning equipment, has lower operating costs, improves motor efficiency, and can operate in clean environments.

SatCon Technology's high-speed motor drive uses rare earth permanent magnet technology to deliver the power required to a system. The motors are significantly smaller and quieter than traditional motors and up to 15% more efficient, in part because they are able to operate at variable speeds.

Benefits

Energy Savings

Higher motor and electronics efficiency reduce energy use by 10% to 15% annually compared with traditional induction motors. A 28-horsepower motor driving a 25-ton centrifugal compressor would save approximately 9000 kWh per year.

Efficiency

The centrifugal compressor is more efficient than current air conditioning systems. Motor efficiency that is 10% to 15% higher than traditional motors creates additional improvements.

Productivity

At 100 pounds, the lighter, smaller, and quieter drive offers significant installation savings compared with conventional air conditioning package units with 500-pound compressors.

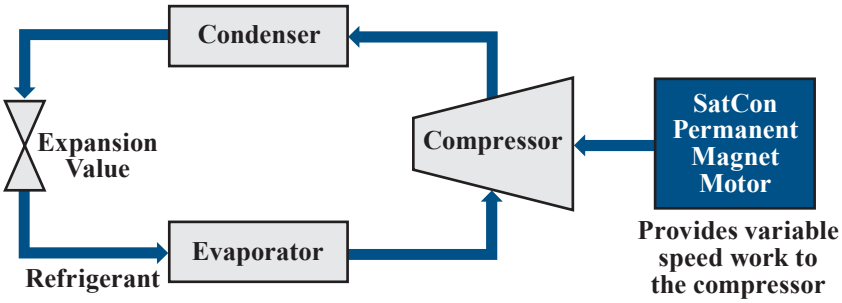

Air Conditioning System Using SatCon Motor

Overview

- Motor system developed and tested by SatCon Technology Corporation
- Commercially available since 1999
- Over 2000 units operating in U.S. technology systems

Applications

- 25-ton and larger rooftop air conditioning units and centrifugal chillers
- Rapid thermal processing for manufacturing semiconductors

Capabilities

- Reduces overall weight of air conditioning equipment, which is a significant advantage for roof-mounted equipment.
- Performs reliably for an anticipated 30,000-hour lifetime.
- Produces less noise than typical induction motors.
- Operates safely in clean productions facilities (non-contact).
- Can be used for specialized applications and processes because of high temperature tolerance (1200°C).

Contact: SatCon Technology Corporation - Eric Davies - (617) 661-0540 - davies@satc.com

Innovative System for Pouring Concrete Basements and Crawlspaces Achieves an R-22 Insulating Barrier

Building a house with a basement or crawlspace requires a strong foundation. Poured-in-place concrete is generally used. Poured-in-place concrete foundations are constructed by pouring wet concrete between vertical forms made of plywood or other material. Conventional forms are difficult to transport to the job site and assemble; however, these forms maintain the wall's structural integrity until the concrete is fully cured. The Lite-Form Concrete Wall-Forming System, developed with assistance from DOE's Inventions and Innovation Program, uses lightweight, highly insulative extruded polystyrene forms that can be manufactured as needed or easily assembled at the job site to create concrete walls. Workers assemble the forms using the patented system of ties. Concrete is then poured in the space between the forms. Hydrostatic forces on the forms during the pour and before the concrete solidifies are resisted by thermally insulating plastic ties. Once the concrete cures, the forms can be reused on another job or left in place. Leaving the forms in place provides up to R-22 insulation for the walls or foundation. At R-22, a typical basement (about 2500 ft^2 of wall) constructed with the Lite-Form system saves about 10 million Btu per year.

Purchasing the forms for constructing basements in commercial and residential buildings is becoming more popular each year. Potential builders can also purchase a machine to construct the forms at the job site significantly reducing transportation and labor costs. The technology has recently been extended to decks and light commercial walls for above-grade construction replacing some conventional construction systems.

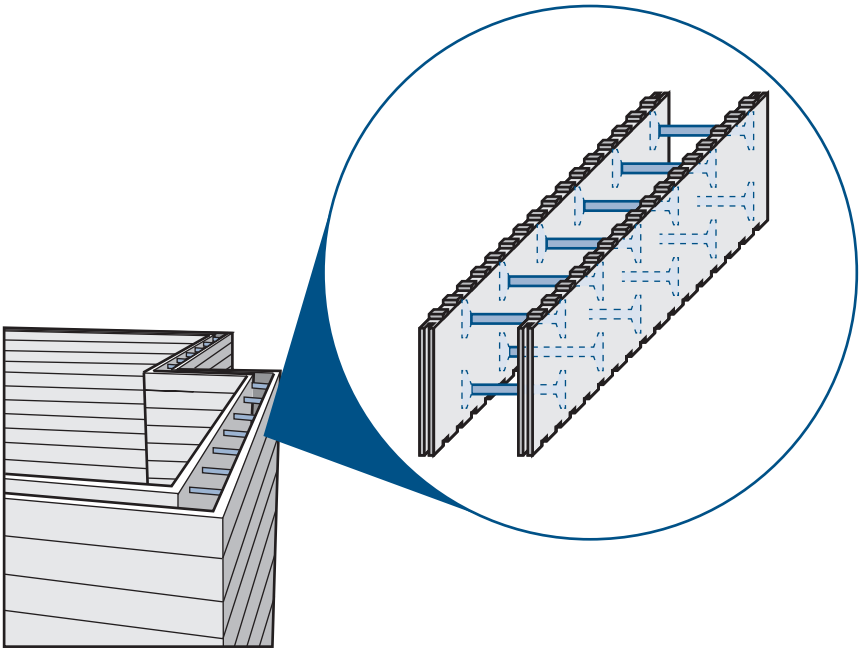

Lite-Form Concrete Wall-Forming System

Overview

- Commercially available from Lite-Form International, Owens Corning, and other licensees
- Used for over 47 million sq ft of walls
- First sold in 1994

Energy Savings

(Trillion Btu)

Cumulative through 2003	2003
0.978	0.192

Emissions Reductions

(Thousand Tons, 2003)

Particulates	SO_X	NO_X	Carbon
0.0	0.024	0.025	3.33

Applications

A method for pouring concrete walls for buildings using rigid insulation board for each side of the concrete form

Capabilities

If left in place, the Lite-Form Concrete Wall-Forming System creates walls that are both load-bearing and thermally insulating—in a single operation.

Benefits

Environmental Benefits

The inside and outside forms are left in place or can be easily removed for use elsewhere rather than sent to a landfill. Lite-Form walls reduce the chance of moisture damage and radon gas contamination in basements.

Productivity

Under adverse conditions, such as very cold weather, the forms improve the strength of the concrete during construction, thereby extending the building season.

An Innovative Building System That Is Energy Efficient, Structurally Sound, and Easily Constructed

The concerns of the home building industry center around increasing productivity in the construction process, improving the quality of American homes, expanding opportunities for affordable home ownership, enhancing the U.S.'s competitive position relative to global markets, and ensuring the cost-effective and energy-efficient operation and maintenance of homes.

With the help of a grant from DOE's Inventions & Innovation Program, Amhome USA, Inc., developed a method of constructing buildings that are both energy efficient and structurally sound. The new home consists of an exterior patented wall system made of expanded polystyrene (EPS) foam insulation panels with an internal steel-reinforced concrete post and beam design. This wall has an R-40 insulation panel with an internal steel-reinforced concrete post and beam design. The roof is insulated by EPS slabs sandwiched between the rafters and has an R-50 insulation value. The primary innovation of this system is the way the walls are constructed, which requires less labor compared with traditional wood-frame houses.

Benefits

Environmental

The Amhome method saves timber by using 35% less wood than frame homes and saves insulation by using recycled insulation in the roof.

Productivity/Quality

Homes using the innovative EPS foam can be built faster than traditional wood-frame homes. The homes' superstructure is reinforced with concrete and steel for more stability, and the entire house is united into one solid piece.

Concrete Being Pumped into the Wall Cavity of an Insulated Foam Home

Overview

- Commercialized by Amhome USA, Inc., in 1996
- 315 homes constructed through 2003

Energy Savings

(Trillion Btu)

Cumulative through 2003	2003
0.027	0.005

Emissions Reductions

(Thousand Tons, 2003)

Particulates	SO_X	NO_X	Carbon
0.0	0.0	0.001	0.092

Applications

- New, single-family residences.
- New multifamily dwellings.
- Small commercial buildings.

Capabilities

- Provides an R-40 wall using EPS foam insulation panels to form the exterior walls.
- Provides an R-50 roof/ceiling using EPS foam between the rafters.

Contact: Amhome USA, Inc. - Roy Gielen - (727) 573-4001 - ERTH2@msn.com

New Kitchen Exhaust System Uses Variable Speed Controls to Save Energy

Typical exhaust hoods in restaurants operate at full speed all day long and sometimes all night long even when cooking is not taking place. With assistance from DOE's Inventions and Innovation Program, Melink Corporation developed a microprocessor-based controller for commercial kitchen ventilation systems. The controller optimizes system performance for four key parameters: kitchen comfort, fire safety, occupant health, and energy efficiency. The controller uses an intelligent code that continually analyzes an array of operational inputs and provides an output signal to variable-frequency speed drive (VFD) electronic motor starters, which then vary the speed of the exhaust and makeup fans.

The main control system includes a keypad that provides bypass capability and preset functions such as minimum fan speed, temperature span, and monitoring. The input/output (I/O) processor continuously reads inputs from the optic and temperature sensors that monitor heat and smoke levels from cooking activity. The air purge units prevent grease vapors from collecting on the optic sensor lenses to ensure trouble-free operation.

When cooking needs are low, the sensors prompt the processor to maintain low preset fan speeds, which provides fan motor energy savings. When the sensors identify smoke or temperature levels above preset limits, the processor prompts the electronic motor starter to increase the exhaust fan speed to accommodate increased ventilation needs. When cooking needs are reduced, the sensors prompt the processor to again reduce fan speeds to energy-saving levels.

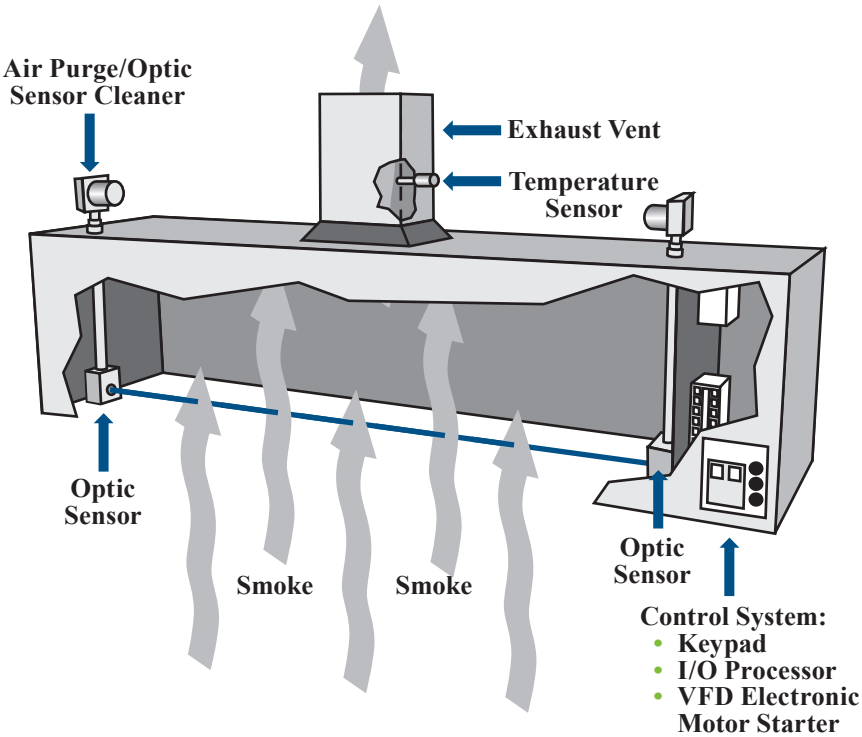

The Melink Restaurant Exhaust Ventilation System

Overview

- Developed by Melink Corporation
- Commercialized in 1994
- Over 1800 units sold

Energy Savings

(Trillion Btu)

Cumulative through 2003	2003
0.369	0.159

Emissions Reductions

(Thousand Tons, 2003)

Particulates	SO_X	NO_X	Carbon
0.001	0.034	0.026	3.13

Applications

Commercial kitchen ventilation systems for restaurants, schools, hospitals, hotels, and other institutions

Capabilities

- Monitors and reduces the fan speed during idle periods of kitchen activity to save energy.
- Provides sensors that monitor heat and smoke levels for safety.

Benefits

The main benefit of upgrading the hood system with variable-speed controls is energy savings. Other benefits include improved kitchen comfort, energy-efficiency, occupant health, and fire safety.

New Fastening System Reduces Energy Use of Buildings

Roofing systems for industrial and commercial buildings continue to make significant strides in their performance and durability. Fasteners are essential to keeping many of these roofs intact by joining of pieces or multiple layers. However, the combination of newer roofing materials, known as singly-ply membranes, with conventional metal fasteners leads to increased heat loss. This loss occurs because the metal screw and plate of the fastener are only minimally insulated from the surroundings and conductive heat flow occurs through the thermal bridge created by the metal fastener.

The RR-1 Insulated Screw Cap Assembly, developed by The Romine Company of Newark, Ohio, with the aid of a grant from the DOE's Inventions and Innovation Program, is a simple but effective solution to heat loss and back-out problems found with many conventional fasteners. This improved fastener consists of an injection-molded fiberglass-reinforced nylon anchor, soft insulating plug, and optional grappel washer. The system is simple to install and extremely strong.

The energy advantage of the RR-1 results from the fastener depth and insulation value. The metal screw portion of the fastener is embedded at least one inch into the insulation board, reducing the heat transfer through the fastener. A foam plug is inserted in the cavity created and acts as an insulator. The new fastener design is more resistant to condensation and corrosion, which makes the fastener less likely to corrode and lose holding strength over time.

Benefits

Productivity

The simple flush mount requires less torque and time to screw in (no predrilling required) and provides a smoother finish than conventional fasteners. The RR-1 is also produced from less costly materials, so it is a more economical choice than other all-plastic fasteners.

Durability

In tests conducted on wind uplift, the strength of the RR-1 insulating fastener proved to be greater than the holding power of the metal decking. The RR-1 fastener also resists back-out. These features, and fastener tear-out, are particularly critical with the newer flexible membrane roofing materials.

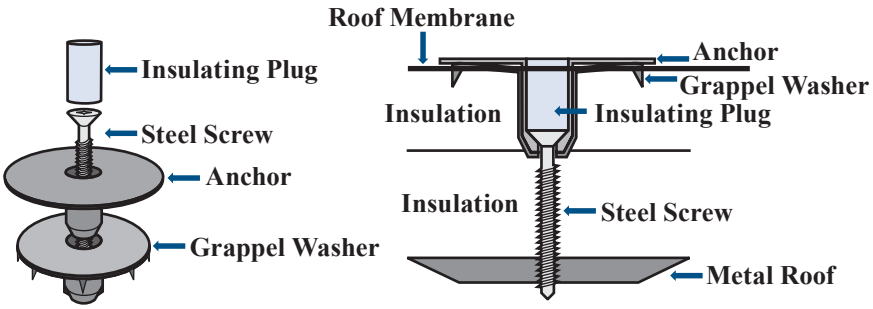

The RR-1 Insulated Screw Cap Assembly

Overview

- Developed and marketed by The Romine Company
- Commercialized in 1997
- 230,000 units sold through 2003

Energy Savings

(Trillion Btu)

Cumulative through 2003	2003
0.006	0.002

Emissions Reductions

(Thousand Tons, 2003)

Particulates	SO_X	NO_X	Carbon
0.0	0.0	0.0	0.029

Applications

The technology may be used on commercial and industrial buildings with membrane roofs and metal roofs. The screw caps may also be applied as a retrofit to older roofs.

Capabilities

- Replaces conventional metal or plastic fasteners to improve the energy performance in building roofs.
- Optimized for fastening single-ply roofing or rigid insulation to metal decking.
- Resists typical problems for fasteners including back-out and corrosion.

Contact: The Romine Co. - Robert Romine - (740) 345-9144

Method for Restricting Air Flow for Selected Zones within a Building Saves Energy

The Department of Energy's Inventions and Innovation Program funded development of a method for selectively controlling airflow from a central HVAC system. The system uses RetroZone's Flexdamper™ Air Control Inserts coupled with an electronic controller and air pumping system. Flexdampers are remotely powered by air, so no bulky motor is present on the outside of the damper to hinder installation. Round or rectangular Flexdampers are easily installed into new ductwork or retrofitted into ducts that cannot accept conventional dampers because of poor access. The rectangular Flexdamper can be folded or bent to insert through a register or other smaller opening, making this damper a viable option for retrofitting air control into ducts that have been covered with sheet rock or other obstacles. Trim-to-fit sizing by the installer allows each size of rectangular Flexdamper to fit several sizes of duct, including non-standard sizes.

Many new homes are built with ducts in joists and other restricted areas, preventing installation or later servicing of a mechanical damper. Flexdampers can be serviced from a register or plenum, with no need to get to the outside of a duct. This opens many new service and installation options. The lighter weight of a Flexdamper does not need special support and works well for suspended duct applications.

Benefits

Cost Savings

In addition to energy savings there are savings in installation costs and labor and up to $2000 per system savings from stretching the capacity of the HVAC system.

Energy Savings

A single zoning system can save 20% to 30% in a typical heating and cooling bill. Most installations are in larger homes with an estimated saving of over 5000 kWh per year, depending on energy use and climate conditions.

Installation

Flexdampers can be retrofitted into ducts that cannot accept conventional dampers because of poor access. The Flexdamper's lower unit cost makes zoning practical in retrofit, multi duct systems that may need several dampers per zone.

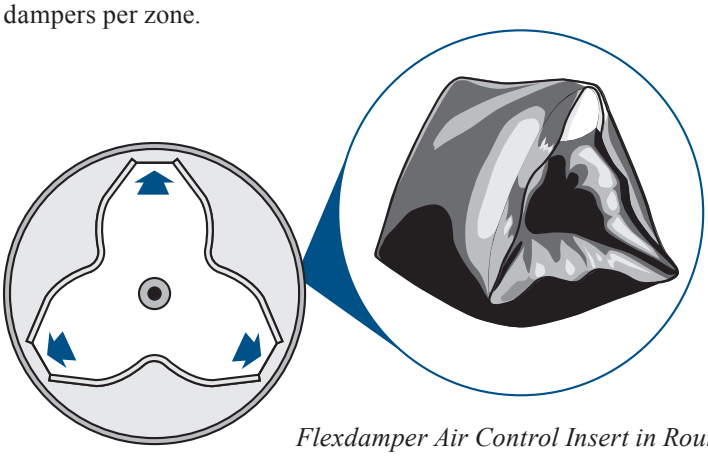

Flexdamper Air Control Insert in Round Duct

Overview

- Developed by RetroZone, Inc. (formerly Enerzone Systems)
- Commercialized in 1991
- More than 4,000 units in use in 2001

Energy Savings

(Trillion Btu)

Cumulative through 2001	2001
0.305	0.064

Emissions Reductions

(Thousand Tons, 2001)

Particulates	SO_X	NO_X	Carbon
0.0	0.008	0.008	1.11

Applications

- Retrofit for HVAC systems in larger homes
- Suitable for installation with new HVAC systems

Capabilities

- Restricts heating and cooling in areas that are not in use.
- Increases comfort for occupied areas.
- Reduces heating and cooling system capacity requirement.

Solar Water Heater Uses Lightweight, Low-Cost Polymeric Materials in Rooftop Collector

With a grant from the Department of Energy's Inventions and Innovation Program, the American Solar Network, Ltd. developed a solar skylight water heater system. Sales of rooftop collectors are increasing and production capability has been expanded to include several models. The newest version marketed by SolarRoofs.com, a division of ACR Solar International Corp., is the Fireball 2001®. The system's rooftop solar collector comes in two easy-to-connect six-foot sections that weigh less than 38 pounds. The collector uses a high-performance copper absorber coated for low emissivity and high absorption. The inside walls of the collector feature a high-emissivity white coating that reflects otherwise lost heat back onto the absorber. Of the five collector models, three are open loop and two are freeze-proof, closed loop systems.

Solar heated water from the collector is circulated to the existing hot water heater using copper tubing. A differential temperature controller turns the circulation pump "ON" or "OFF" at the appropriate temperature differentials. Two sensors wired to the differential controller perform the temperature sensing function. One is placed at the bottom of the collection tank. The other sensor is placed just inside the collector. The optional freeze sensor attaches to the hot out line just as it leaves the collector box.

Benefits

Ease of Installation

The collector and solar water heating system can be installed in a few hours. Pre-assembly of components eliminates hours of installation time.

Energy Savings

Potential annual energy savings for a family of four are about 2700 kWh of electricity or about 10 million Btu depending on water use and climate conditions. Solar water heating systems can save $175 per year for a family of four when compared with electric heating at a $0.065/kWh rate.

Pollution Control

Solar water heaters are healthier for the environment because solar energy avoids the harmful emissions of electrical energy generation.

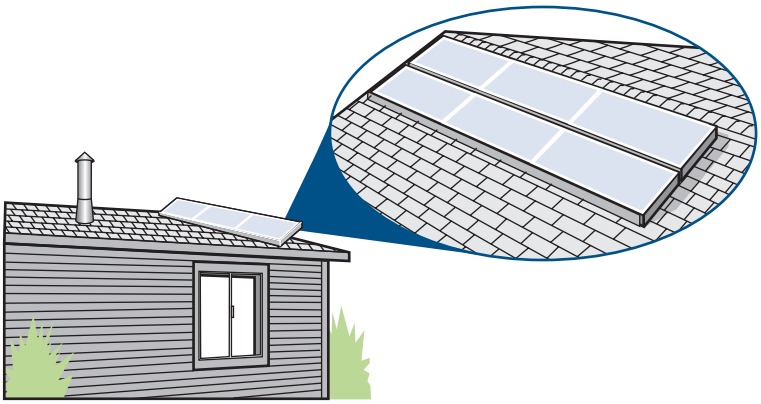

Solar SKYLITE Water Heater

Overview

- Developed by SolarRoofs.com
- Commercialized in 1993
- Over 1,400 units sold

Energy Savings

(Trillion Btu)

Cumulative through 2002	2002
0.076	0.014

Emissions Reductions

(Thousand Tons, 2002)

Particulates	SO_X	NO_X	Carbon
0.0	0.003	0.002	0.275

Applications

Rooftop solar panel for hot-water heating

Capabilities

- Easy-to-install modular system.
- Optional freeze protection system.
- Emulates a skylight in appearance and construction.

Contact: SolarRoofs.com - Al Rich - (916) 481-7200 - richsolar@aol.com

New Redesigned Plumbing System Easy to Operate and Saves Energy and Water

Current electronic technology enables automation to be applied to most systems in the home today, including the plumbing system. Conventional plumbing typically features dual 1/2" lines to feed hot and cold water to each of several points of use throughout a home - the kitchen, lavatory, and tub/shower. The user must manipulate such systems to obtain desired temperature and flow rate. Typically, water is run down the drain until the desired temperature is reached. This practice wastes the water sitting in the lines and loses the energy used to previously heat the water.

The Ultraflo automated plumbing system is a single-line electronic plumbing system that allows the user control over the water flow rate and temperature. With the aid of a grant from the Department of Energy's Inventions and Innovation Program, the Ultraflo System was redesigned and tested. The major redesign was to add touchpad control of temperature and flow rate at each point of use in the home.

Ultraflo is a water management system that uses a centralized solenoid valve unit, 12-volt electrical current, and switch consoles at each point of use. Hot and cold lines supply water to the central valve unit, which then delivers water on push-button demand to each end-use location via single 1/4" lines. Each console is customized to the water needs at that particular point of use. Preset temperatures and flow rates are activated by pushing the appropriate button on the console. The user can make subsequent changes in the settings by making slight adjustments at the central valve unit. Key to Ultraflo's water and energy savings is the single, small-diameter line extending from the central valve unit to each end-use location. These lines not only serve as flow restrictors but also retain less water between uses, so less water must be wasted waiting for a desired temperature.

Ultraflo Touchpad Control Panel

Overview

- Commercialized by Ultraflo Corporation
- 100 units sold

Applications

Home plumbing systems

Capabilities

Regulates water flow and temperature using a solid-state automatic touch control panel.

Benefits

- Reduces energy and water consumption.
- Is easy to maintain and operate.
- Provides increased saftey compared with conventional faucet systems by eliminating scalding.

New Solar-Assisted Design Increases Energy Eficiency of Commercial Heat Pump Systems

A new system extracts heat from air or water and applies the heat to water. The system, a solar-assisted heat pump water heater (HPWH), provides both water heating and space cooling. The solar-assisted HPWH was designed and commercialized by Wallace Energy System, with the aid of a grant from the Department of Energy's Inventions and Innovation Program.

In this HPWH, the air stream passes through one side of the unit and is cooled, and water passes through the other side of the unit and is heated. By transporting heat from a source (e.g., outside air or air inside a building) rather than producing it by combusting gas or using electric resistance elements, the commercial HPWH is two to three times more efficient than a conventional water heater.

As it heats water efficiently, the HPWH provides cooling as an additional benefit. The Wallace design consists of an outdoor heat pump section, an indoor air handler, and a water storage tank with an internal heat exchanger. Refrigerant lines couple the outdoor heat pump to the indoor air handler and to the water storage tank. The system, based on refrigerant HFC-134a, is available in water heating capacities up to 58,000 Btu/h.

The most cost-effective applications are those that can take advantage of the cooling benefit and that need large amounts of hot water and cooling, such as laundries and schools. More than 103 units are in use and have cumulatively saved 118 billion Btu.

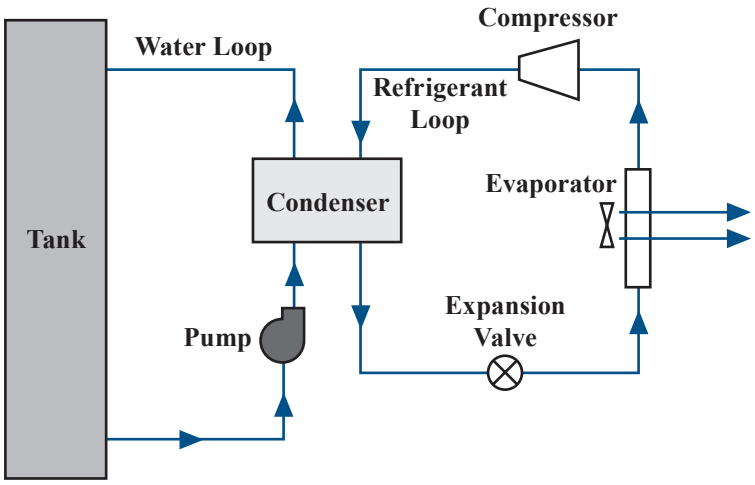

Heat Pump Water Heating System

Overview

- Developed by Wallace Energy Systems
- Commercialized in 1993
- Currently more than 103 units in use

Energy Savings

(Trillion Btu)

Cumulative through 2001	2001
0.118	0.019

Emissions Reductions

(Thousand Tons, 2001)

Particulates	SO_X	NO_X	Carbon
0.0	0.004	0.003	0.379

Applications

Applications that need large amounts of hot water and cooling, such as coin laundries and schools

Capabilities

Provides water heating and space cooling.

Benefits

- Saves energy.
- Is three times more efficient than conventional systems.
- Provides cooling while it heats water.

Cromer Cycle Air Conditioner

In many climates, especially where fresh air is introduced, air conditioners need to overcool to control moisture and maintain comfort. The Cromer cycle air conditioner increases the moisture-removal capacity of the air-conditioner coil, reducing run time and saving energy. The cycle uses desiccant to transfer moisture from the supply air to the return air. This transfer increases the air conditioner's efficiency.

Contact: **Solar Engineering Co.**
460 Indian Creek Drive
Cocoa Beach, FL 32931

Charles J. Cromer
Telephone: 321-638-1445
Email: charlie@fsec.ucf.edu

Electronic High-Pressure Sodium Ballast

Two different electronic ballast technologies have been developed for high intensity discharge (HID) lamps. One ballast is for high pressure sodium lamps in the 70- to 250-watt range and will be used where energy savings are important. The second HID ballast is for 400-watt metal halide lamps where extremely high reliability and flickering/acoustic resonance free operation are critical. Both electronic ballast designs have high efficiency (95%), wide operational temperature ranges, and dimming capability.

Contact: **Ballastronic, Inc.**
3918 SW 61st Avenue
Miami, FL 33155

Janos Melis
Telephone: 305-665-6368
Email: janos.melis@ballastdesign.co

Grant Originally Awarded to: **LCB Corporation**

GibBAR-Wall™ System

The GibBAR-Wall System is a new method for constructing load-bearing and nonload-bearing reinforced concrete walls. The system uses expanded polystyrene foam insulated panels as concrete forms and can be used for commercial, industrial, and residential buildings. The system reduces heat transfer through the walls and also prevents air leaks, resulting in energy savings. In addition, this quick and easy-to-erect system meets national fire codes and standards for earthquake-resistant buildings.

Contact: **Industrial Foam Products, Inc.**
104 Briar Drive
Perryville, Missouri 63775

James H. Gibbar, Jr.
Telephone: 573-547-6558
Email: info@gibbarwall.com

Inner Roof Solar System

This new solar PVT (photovoltaic – thermal) hybrid CHP (combined heat and power) roofing technology incorporates a finished roofing surface that consists of an aesthetically appealing innovative solar tile and roof component that simultaneously provides solar water heating and solar electricity for businesses and homes. This new PVT concept has been designed to incorporate both a pre-manufactured solar PVT panel and a solar hot water absorber into a single rigid panel system that is the roofing surface. This system includes quick water and electrical connections. Panel to panel connections occur in this quick connect system above the roofing surface. This integrated solar roof - CHP concept is undergoing materials and systems engineering for the pre-production prototype. Residential and commercial markets for an insulated solar roof product for heating and electricity could be a large source of energy saving and generation to the nation. This concept will help to remove one of the greatest barriers to commercialization of solar power in the residential and in some commercial properties – poor esthetics of most solar products. This product system will be commercialized and brought to the solar energy and roofing markets through the efforts of various existing tile roof manufacturers/ distributors and various existing solar system manufacturers and solar system integrators.

Contact: **Inner Solar Roof Systems, Inc.**
731 NE 69 Street
Boca Raton, FL 33487

Joe Allegro
Telephone: 561-997-8479
Email: innersolar@email.com

Simple Control for Single-Phase AC Induction Motors in HVAC Systems

A new approach to electric motor control removes the need for complex, high-frequency, high-voltage digital controllers that are motor and application specific. Using an optical programmable encoder offers continually variable speed, optimized commutation, dynamic vector control, real-time feedback, application tuning, and signal enhancement for operating AC and DC motors ranging in size from fractional horse-power to industrial motors. The application currently being developed is a drop-in unit for the residential HVAC retrofit market and provides continuous variable adaptability to air temperature, resulting in improved comfort, a cleaner environment, and energy savings.

Contact: **Opto Generic Devices, Inc.**
174 Pumpkin Hook Road
Van Hornesville, NY 13475

Chris Phipps
Telephone: 315-858-1002
Email: cphipps@ogd3.com

Variable Speed, Low Cost Motor for Residential HVAC Systems

Today, variable speed motors are used in only 5% of residential HVAC systems. The reason is cost. Existing variable speed motors cost at least 4 times as much as single speed motors. A revolutionary low-cost, brushless, variable speed motor technology is being developed that uses solid state switches on the rotating armature to control motor torque and speed. A variable speed motor running continuously at a 1/2 speed uses 1/4 of the power to move the same amount of air in an HVAC blower thus saving energy.

Contact: **DynaMotors, Inc.**
11,000 Cedar Avenue
Suite 434
Cleveland, OH 44106

Doug Toman
Telephone: 216-795-1211
Email: dtoman@dynamotors.com

Commercialized Technology

- Portable Automatic Firewood Processor 38

Emerging Technologies

- Air Turbine Cycle Plant 39
- Clean Energy from Biosolids 39
- Deep-Discharge Zinc-Bromine Battery Module 39
- Particulate Ejection Coal Fired Turbine 39
- Rotary Burner 40
- Thermoelectric Generator for Diesel Engines 40
- Thermophotovoltaic Electric Power Generation Using Exhaust Heat 40
- Two-Phase Hero Turbine with Curved No-Separation Nozzles 40

Innovative Firewood Production Machine Reduces Labor and Production Costs

Firewood production is notorious as being one of the toughest and most labor-intensive processes in the wood products industry, and in the past many companies have been reluctant to be in the firewood business for this reason. Rainier Hydraulics, Inc., with the help of a grant from the Department of Energy's Inventions and Innovation Program, designed and developed a machine that eliminates the back-breaking labor and reduces labor costs of producing firewood, thus making firewood production profitable. Conventional firewood processors use chain or circle saws, separate splitter heads, infeed conveyors, and live log decks. The new machine, the Chomper, uses a shear blade for cutting logs to length and requires only one person to operate. All of the competitive processors require a minimum of two people to operate and other supporting equipment.

The Chomper is the only firewood processor available that automatically shears the log to desired firewood length and splits it into 2, 4 or 8 pieces depending on log diameter. The Chomper can process tree length logs up to 16 inches in diameter at ground level. The shear blade system used on the Chomper eliminates the down time incurred by conventional firewood processors that process dirty, muddy, rock encrusted logs because the shear blade never needs sharpening. Several models are available to meet the requirements from the small to large commercial producers. All models are portable and can be towed with a $^{3}/_{4}$-ton pickup. In a study of firewood drying for 9 species of wood, the Chomper was shown to achieve the same moisture level or dryness in 60 days that the conventionally sawn and split processing method achieved in 127 days. Thus, firewood produced by the Chomper can be sold as seasoned wood much sooner, thereby increasing profits.

The Chomper Model 16 with Belt Conveyor

Overview

- Developed by Rainier Hydraulics, Inc.
- Commercialized in 1984
- More than 200 units sold since 1984

Applications

Commercial firewood production industry

Capabilities

- Requires just a single operator.
- Offers automatic operation in a number of models or sizes.
- Are mobile and easily transported to the worksite.

Benefits

- Reduces labor costs by at least 50% versus conventional methods of firewood production.
- Requires 50% of the drying time of conventional sawn and split wood, thus increasing profits.
- Increases reliability, thus reducing maintenance costs.
- Eliminates sawdust production.

Contact: Rainier Hydraulics, Inc. (RHI) - Warren Aikins - (503) 556-9136 - chomper@ados.com

Air Turbine Cycle Plant

This new system uses an air turbine cycle to generate electricity, compressed air, and steam by burning biomass and other industrial wastes. It has lower capital-investment costs than the competing cogeneration systems. In addition, the air turbine cycle plant minimizes pollution by using a combustion system with a bed of circulating fluids. The air turbine concept is better suited to small-size plants than its main competitor, the steam-turbine plant.

Contact: Richard W. Foster-Pegg
1224 Princeton Lane
West Chester, PA 19380-5743

Richard W. Foster-Pegg
Telephone: 610-429-4880

Clean Energy From Biosolids

The innovative and unique SlurryCarb processes waste as a slurry and then treats it in a heated pressure unit to rearrange the slurry molecularly. This step produces a homogeneous, clean fuel with an energy density significantly greater than untreated material. The high-energy renewable "E-Fuel" can be utilized efficiently in conventional combustion equipment as a substitute for fossil fuel.

Contact: **EnerTech Environmental, Inc.**
739 Trabert Ave., NW
Atlanta, GA 30318

Kevin Bolin
Telephone: 404-355-3390
Email: etkbolin@aol.com

Deep-Discharge Zinc-Bromine Battery Module

A new zinc-bromine battery is being demonstrated that increases load-leveling efficiency and offers longer cycle life with less weight than conventional lead-acid batteries. This new battery is applicable to electric utilities and industrial companies. The modular construction allows for sizing and portability of the system to suit multiple applications and needs. This technology allows customers to purchase lower-cost power and then use it for reducing peak-power purchases.

Contact: **ZBB Technologies, Inc.**
N93 W14475 Whittaker Way
Menomonee Falls, WI 53051

Rob Parry
Telephone: 262-253-9800
Email: zbbtec@zbbenergy.com

Particulate Ejection Coal Fired Turbine

A sub-scale prototype of a medialess inertial rotary disk filter was successfully evaluated to operate at the high temperatures/pressures typically found in coal-fired gas turbine generators. This technology demonstrates 98% to 99% coal ash removal efficiency without fouling, thus reducing the need for conventional disposable porous ceramic candle filters for hot gas filtration. Constant filtration efficiency and non-varying pressure drop across the all-metal filter eliminates brittle ceramic failures and allows operation at higher gas temperatures, which eliminates gas reheating and improves energy efficiency. The continuously self-cleaning technology may also eliminate landfilling of spent/replaced ceramic candle.

Contact: **InnovaTech Inc.**
PO Box 12744
Research Triangle Park, NC 27709-2744

Steve R. Wright
Telephone: 919-881-2197
Email: wright@novafilter.com

Rotary Burner

A new rotary burner that provides ultra-low combustion emissions along with significant fuel and electricity savings has been developed and field-tested. The novel technology uses a process that allows for expansion of pressure energy in a rotary burner, meaning that combustion air needs can be satisfied and inherently coupled to match the fuel demand to ensure the desired air-to-fuel ratio. Its compact size ensures ease of retrofit to existing installations.

Contact: **Calcpos Engineering**
Box 670-906
Northfield Center, Ohio 44067

Paul Flanagan
Telephone: 330-467-9540
Email: calcpos.pf@worldnet.att.net

Thermoelectric Generator for Diesel Engines

This new technology generates electric energy from waste heat and has many applications in the power industry, as well as in the chemical and petroleum industries. One possible application is as an array on the exhaust of the gas turbine to increase efficiency. Heavy earth moving equipment for mining presents another potential application. A prototype generator is being tested by a truck manufacturer and has been driven on their test track for 500,000 miles to demonstrate the ability to endure shock and vibration.

Contact: **Hi-Z Technology, Inc**
7606 Miramar Road
Suite 2400
San Diego, CA 92126-4210

John C. Bass
Telephone: 858-695-6660
Email: info@hi-z.com

Thermophotovoltaic Electric Power Generation Using Exhaust Heat

This new technology produces electricity directly from furnace exhaust waste heat by using infrared-sensitive photovoltaic cells. The cells are mounted inside ceramic tubes that are heated in the high-temperature exhaust stream from furnaces. This technology allows on-site generation of electricity from waste heat in industrial or residential applications.

Contact: **JX Crystals, Inc.**
1105 12th Avenue NW
Suite A2
Issaquah, WA 98027

Jason Keyes
Telephone: 425-392-5237
Email: jkeyes@jxcrystals.com

Two-Phase Hero Turbine with Curved No-Separation Nozzles

This new steam turbine, now in the prototype testing phase, has a unique design that can improve thermal cycle efficiencies up to 50% over conventional steam turbines. The turbine has converging/diverging nozzles that avoid two-phase flow separation and abrupt flashing, thus achieving higher efficiency. In addition to energy cost savings, operating costs are reduced through lower maintenance costs and increased longevity from reduced corrosion.

Contact: **FAS Engineering, Inc.**
2039 Dublin Drive
Glendale, CA 91206

Gracio Fabris
Telephone: 818-952-0217
Email: gfabris@earthlink.net

FreedomCAR

Commercialized Technologies

- Dual Fuel Energy Conversion System for Diesel Engines 42
- Fuel Transport Modules 43
- SeaCoaster 44

Emerging Technologies

- An Indirect Sensing Technique for Closed-Loop Diesel Fuel Quantity Control 45
- Clemson Camshaft 45
- Flywheel Electric Battery 45
- High Pressure, Electronic, Common-Rail Fuel Injection System for Diesel Engines 45
- Hydrostatic Mooring System 46
- Innovative Approach to Improved Fuel Economy in Heavy-Duty Trucks 46
- Ship-Borne Emergency Oil Containment System and Method.... 46

A Fuel-Powered, Liquefied Natural Gas Conversion System for Diesel Engines Greatly Reduces Emissions

With assistance from the Department of Energy's Inventions and Innovation Program, Energy Conversions, Inc. (ECI) developed and tested a system to convert a large diesel engine to dual-fuel usage. The new engine uses 90% natural gas as efficiently as diesel fuel while greatly reducing emissions. In addition, a natural gas engine requires much less maintenance, emits fewer pollutants, and operates just as safely as a diesel or gasoline engine.

ECI dual-fuel engine systems consist of specifically engineered pistons and heads, patented gas injectors, a supplemental cooling system, and ECI engineered electronic controls. This system enables converted engines to operate on 90% natural gas while maintaining engine efficiency and fully rated horsepower. Dual-fuel operation is completely automated, requiring no user input. If a function falls out of normal operational limits, full diesel operation is activated instantly with no interruption of service.

ECI dual-fuel systems provide substantial emissions improvements over unmodified counterparts, reducing NO_X emissions by 66% in locomotive applications, with further improvement in stationary installations. ECI conversion systems are currently saving one of their offshore drilling customers $4,000 per day in fuel costs with additional savings as a result of the reduced cost of maintenance from burning a cleaner fuel.

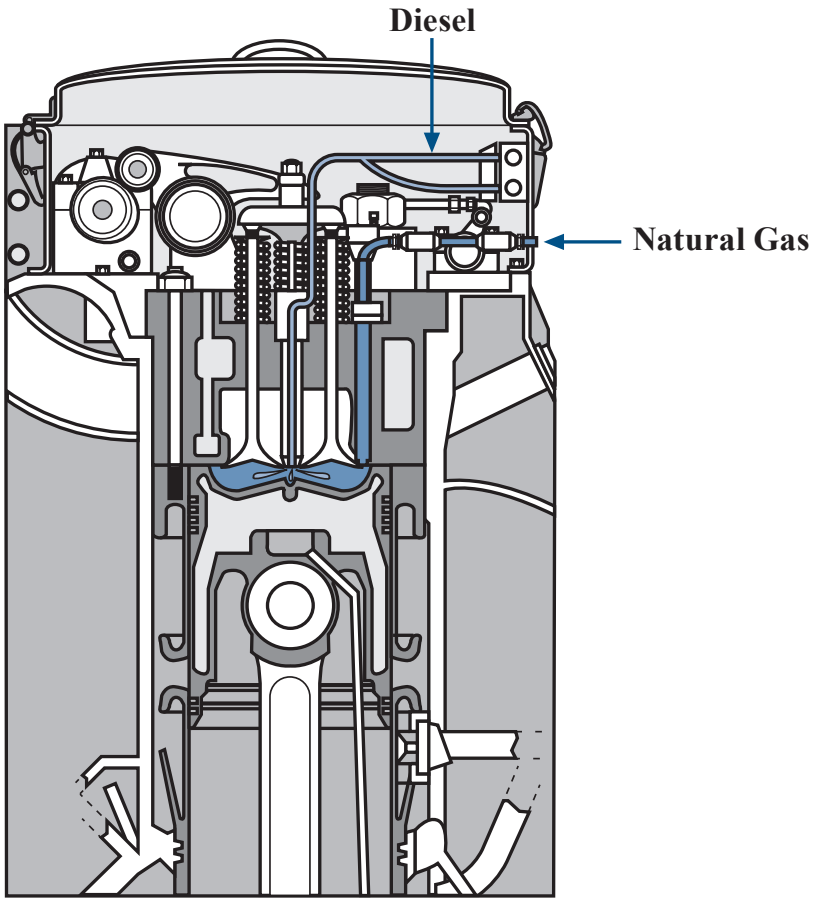

Dual-Fuel Engine

Overview

- Commercialized by Energy Conversions Inc. (ECI)
- Commercialized in 1992
- In 2002 there are 23 installations worldwide, 12 in the United States

Applications

A fuel-powered, liquefied, compressed or pipeline natural gas conversion kit for General Motors EMD series industrial power engines used as stationary generators, drilling platforms, marine vessels and locomotives worldwide. ECI also produces a similar system for the Caterpillar 379, 398, and 399 series engines.

Capabilities

This conversion system, which uses a fuel with a readily available and abundant supply, results in a reduction of emissions released into the atmosphere, especially particulates and NO_X.

Benefits

Energy Cost Savings

Provides increased flexibility in fuel use thus resulting in cost savings to users.

Emissions

Reduces amount of emissions released into the atmosphere, especially particulates and NO_X. NO_X emissions are reduced by up to 66%.

Maintenance Cost Reduction

Reduces engine maintenance because it burns a cleaner fuel.

Operating Labor Reduction

Pipeline fuel supply reduces refueling labor, and liquefied natural gas systems have larger fuel storage so they need less frequent refueling.

Waste Reduction

Reduces oil and filter replacement and disposal.

Contact: Energy Conversions, Inc. - Paul Jensen - (253) 922-6670 - pjensen@energyconversions.com

New Lightweight Natural Gas Modules Allow for More Efficient Alternative Fuel Vehicles

One of the prerequisites for a natural gas vehicle is that the weight of the fuel tanks not be too great. Norman Fawley, NCF Industries, with the aid of a grant from the Inventions & Innovation Program, designed, built, and tested a lightweight compressed natural gas (CNG) transport module. The module consists of an Al tube on the inside and glass filament reinforced with resin on the outside. The tubes were pressure and fire tested and are rated up to 3000 psi. Natural Gas Vehicle Systems used these 13-inch diameter tubes to convert vehicles to use natural gas from 1989 to 1999. The container modules and licensing are available from NCF industries.

The license was sold in 1999 to TransCanada Pipelines who are producing tubes with a 42 inch diameter that will be used to transport CNG. The Gas Transport Modules (GTMs) consist of a low-alloy, high strength steel pipe that has high strength fiberglass films impregnated with resin wrapped around the pipe. This increases the strength of the vessel while the weight is only 60% of an equivalent steel vessel. The GTMs are up to 80 feet long and 42 to 60 inches in diameter. The GTMs are undergoing the technical and certification processes necessary before putting them to work in transporting and storing natural gas. They are being designed for ship, barge, truck, or rail transportation modes. GTMs will be used in places where a pipeline is not economically justified either due to distance or to the amount of gas needed. They provide market flexibility while avoiding the environmental issues associated with pipelines.

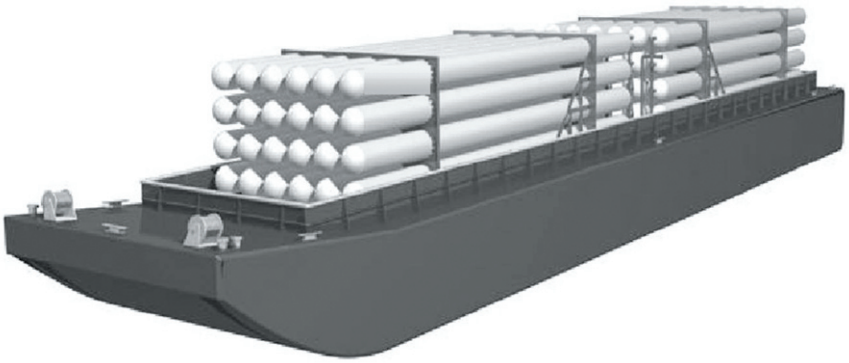

Gas Transport Modules Being Shipped by Barge

Overview

- Designed and tested by Norman Fawley of NCF Industries
- NGV Systems used the modules until they were sold in 1999
- Licensed to TransCanada PipeLines, Ltd. in 1999

Applications

- Modules are used on natural gas vehicles for fuel storage and for hydrogen transportation
- Larger modules (up to 60 inch diameter tubes) are being developed to transport natural gas

Capabilities

- Lightweight aluminum transport tubes allow natural gas to be used as fuel on alternative gas vehicles.
- Larger modules make transportation of gas to remote regions cheaper.

Benefits

- Has superior fracture and tear control compared to all steel vessels.
- Resists corrosion compared to traditional steel pipes and vessels.
- Has 40% less weight per volume transported than all-steel CNG transport alternatives.

New Air-Assisted Boat Reduces Energy Consumption While Improving Performance

With assistance from DOE's Inventions and Innovation Program, Air Ride Craft, Inc., has developed an air-assisted catamaran with wave-slicing fine entry sidehulls. Unlike typical catamarans, SeaCoaster has recesses that are built into the underside of each sidehull and are pressurized with air from powered blowers. The air cushions formed between the catamaran's sidehulls and the water surface support about 80% of the vessel's weight. This design decreases draft, substantially reduces wetted area resistance, and cuts propulsive power requirements by about 50% compared with conventional catamarans and monohulls at cruise speeds. Even with blower power requirements, SeaCoaster still has only about 60% of the power requirements of a standard catamaran. The new design has no flexible seals and no air cushion between the sidehulls, as is the case with surface effect ships (SES). The SeaCoaster has excellent platform stability and provides a smooth ride, unlike the SES bumpy "cobblestone effect."

The first commercial application of the SeaCoaster was by Island Express Boats Lines, which has been operating a 65-foot, 149 passenger ferry between islands up to 25 miles offshore on Lake Erie since 1999. Air Ride Craft is now demonstrating a 102- foot SeaCoaster for the Office of Naval Research. The SeaCoaster offers several advantages as a naval vessel including that it is beachable, has a reduced sonar and magnetic signature, and is much less susceptible to damage from underwater ordinance explosions. After a six-month testing program for the Navy, the vessel will be modified for use as a fast ferry.

SeaCoaster Demonstration Vessel

Overview

- Developed by Air Ride Craft, Inc.
- Commercialized in 1999
- One boat operating since 1999

Applications

- Passenger ferry
- Ferry for offshore oil rigs
- Multiple military applications
- Large transoceanic freighters

Capabilities

- Cuts propulsive power requirements by 50% compared with a conventional catamaran at cruise speeds.
- Decreases draft and substantially reduces wetted-area resistance.
- Offers excellent platform stability and ride characteristics, with no SES "cobblestone effect".

Benefits

Energy Savings and Emissions Reductions

Reduces energy consumption by 40% over conventional ferries.

Improved Performance

Provides significantly improved performance for a wide variety of commercial and naval vessels.

Contact: Air Ride Craft, Inc. - Donald Burg - (305) 233-4306 - donburg@seacoaster.com

An Indirect Sensing Technique for Closed-Loop Diesel Fuel Quantity Control

A low-cost retrofit system has been developed for diesel vehicles which eliminates visible particulate emissions and improves fuel economy, without compromising power. The system is most effective on mechanically-governed diesel engines such as those found in Class 6-8 (large) trucks, off-road equipment (farm and construction), and previously unregulated (pre-1990) diesel passenger vehicles and light trucks. The Electronic Diesel Smoke Reduction System (EDSRS) involves advanced sensing with a microprocessor-based adaptive (learning-type) controller, and a specialized actuator in a rugged package. The after-market kit can be easily installed by a skilled mechanic and requires no periodic maintenance.

Contact: **Loragen Corporation**
3576 Empleo
Unit 1
San Luis Obispo, CA 93401

Dr. Art MacCarley
Telephone: 805-781-8461
Email: art1@loragen.com

Clemson Camshaft

The Clemson Camshaft is a variable-valve timing device for internal combustion engines. A camshaft controls the action of the valves that let mixed fuel and air into an engine and allow gases to escape. In the conventional camshaft, the valves open or close according to just one setting, which is not an optimal fuel economy level for all engine speeds. The Clemson camshaft consists of two shafts, one of which rotates inside the other. An infinite variety of valve settings is possible, theoretically allowing optimal valve action and greater fuel efficiency. The new camshaft's flexibility enables it to be used on double- and single-overhead camshafts and multivalve-per-cylinder engine arrangements.

Contact: **Clemson University**
115 N. Palmetto Blvd.
Clemson, SC 29634-5705

Michael Tim Nelson
Telephone: 360-202-7589
Email: tnelson@shainin.com

Flywheel Electric Battery

A flywheel is a device for storing energy or momentum in a rotating mass. A flywheel power system has a DC output similar to a chemical battery. A flywheel is being developed that will yield a higher power utput than existing flywheel designs. Much of the preliminary research has been completed and a prototype is ready to be tested. Applications for this flywheel include use in spacecraft for energy storage and attitude control and in electric or hybrid vehicles for energy storage.

Contact: **Thortek Innovation Laboratories**
101 River Drive
Irvine, KY 40336-1117

Douglas Thorpe
Telephone: 606-723-2289
Email: doug.thorpe@thortek.biz

High-Pressure, Electronic, Common-Rail Fuel Injection System for Diesel Engines

This new diesel fuel injection system is now in the prototype testing phase. The new system is based on a patented high-pressure pump supplying fuel to and maintaining a predetermined pressure in a common rail connected to the injectors that supply fuel to the combustion chamber of each cylinder. In this system the injectors are controlled electronically, which allows every injector parameter to be individually adjusted and the system to be tailored to the engine requirements for the lowest fuel consumption and emissions levels.

Contact: **Haynes Corporation**
3581 Mercantile Ave.
Naples, FL 34104

James S. Dixon
Telephone: 239-436-1570
Email:Jim_D@haynescorp.com

Grant Originally Awarded to: **Diesel Fuel Injection Corporation**

Hydrostatic Mooring System

This new technology is an open sea, single-point mooring system for oil tankers and other large ships. Other single-point systems use mechanical coupling between the vessel and the mooring, but this new system uses the suction-cup principle with the mooring buoy itself as a giant suction cup. Prototype testing and certification by the American Bureau of Shipping is ongoing. The new system holds the promise of being able to moor ships and transfer liquid cargo on the high seas as reliably or even more reliably than in protected harbors.

Contact: **Jens Korsgaard**
318 N. Post Road
Princeton Junction, NJ 08550

Jens Korsgaard
Telephone: 212-608-3990
Email: edbo@ix.netcom.com

Innovative Approach to Improved Fuel Economy in Heavy-Duty Trucks

A new technology uses an innovative approach to apply a hydrostatic transmission system as a continuously variable transmission in trucks. This transmission uncouples the engine speed from the wheel speed and allows a control module to optimize the engine speed with torque to maintain the vehicle speed. This approach increases fuel efficiency significantly to offset the reduction in transmission efficiency. Related work is exploring an approach to increasing torque at lower engine rpm that results in a dramatic reduction in emissions and a reduction in parasitic energy consumption through the elimination of the engine cooling fan. The potential fuel and emissions savings from these technologies are applicable to all highway vehicles; the present concentration is on the trucking industry.

Contact: **SuperDrive, Inc.**
294 Fox Drive
Piqua, OH 45356

Raymond J. Fleming
Telephone: 937-773-6380
Email: rfleming@superdriveinc.com

Ship-Borne Emergency Oil Containment System and Method

This technology, the Central Ballast Tanker, prevents or minimizes oil outflow in the event of a tank vessel accident involving penetration of the cargo tank(s). The system immediately reports damage location, permitting high-volume, gravity-flow transfer from penetrated tanks to protectively located tanks along the centerline of the vessel. The wheelhouse monitor permits positive detection, location, and flow control in real time.

The Central Ballast Tanker is the only design that directly responds to this recommendation of the Committee on Tank Vessel Design, National Research Council: “All new tankers should have a reliable onboard system for transferring cargo from damaged tanks to an intact tank or another vessel.”

Studies on this new system state: “Technical validity and assured commercial feasibility.” “Deserving of the Flag Administration’s consideration.” “Superior performance compared to the double-hull.” “Superior outflow protection in grounding; equivalent protection in collisions.” “Savings in steel, labor and coating further increased by shipyard purchasing and production methods.”

Contact: **Marine Safety Systems, Inc.**
1106 Wickway
Houston, TX 77024

Carr Chambliss
Telephone: 713-954-5070
Email: cblis@sbcglobal.net

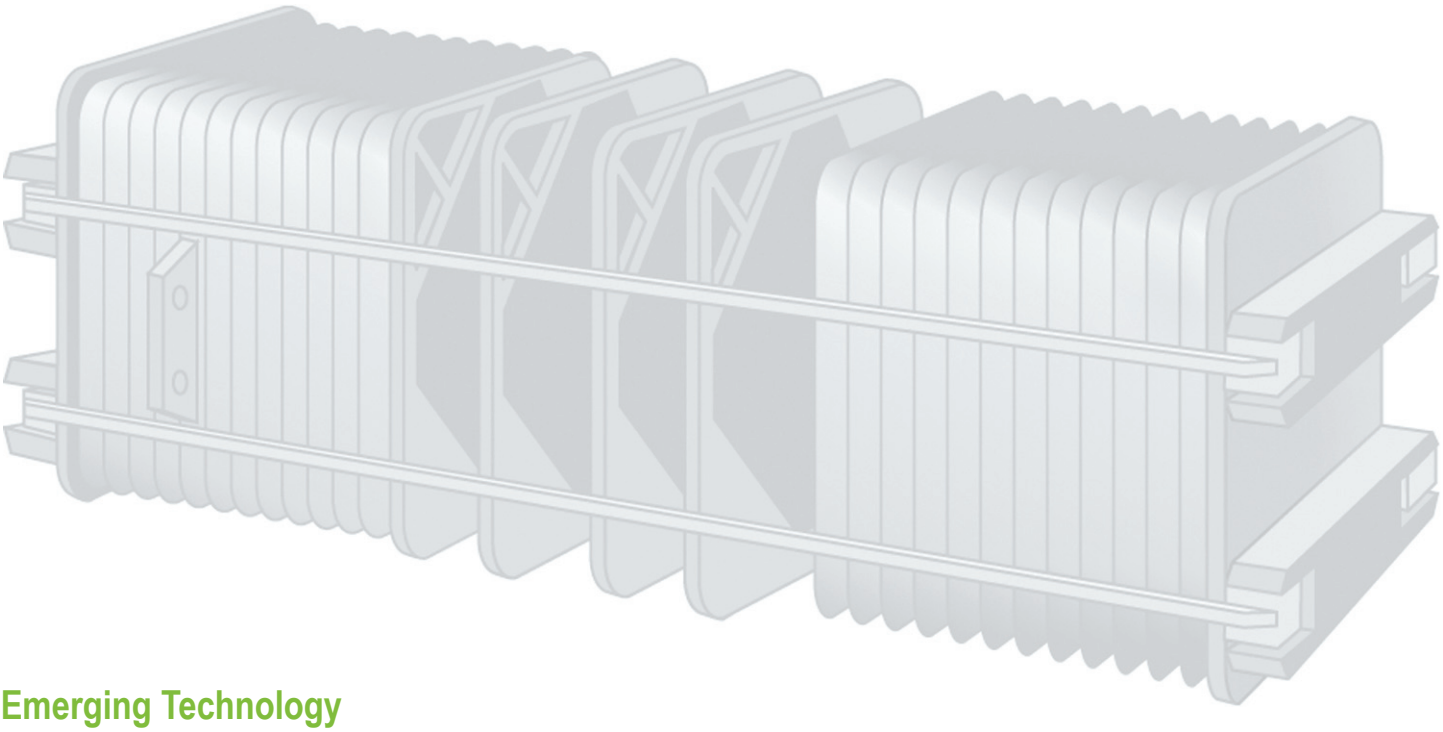

Emerging Technology

- Industrial Fuel Cell Micro-Generator 48

Industrial Fuel Cell Micro-Generator

The industrial fuel cell micro-generator is a new low-cost, small-scale molten carbonate fuel cell power plant designed to improve the efficiency of fuel cell micro-generators and their usefulness for small manufacturers. This smaller fuel cell is ideally suited as an uninterruptible power supply or for standby power applications.

Contact: **GenCell Corporation**
1432 Old Waterbury Road
Southbury, CT 06488

Randolph Bernard
Telephone: 203-264-2515
Email: rmb@gencellcorp.com

Grant Originally Awarded to: **Fuel Cell Technologies, Inc.**

Commercialized Technologies

Aluminum Technologies 50-52

Aluminum Reclaimer for Foundry Applications 50
Aluminum-Rich Concentrate from Municipal Waste 51
High-Capacity Melt Furnace 52

Chemical Technology 53

Aqueous Cleaner and CleanRinse™ Recycling System 53

Crosscutting Technologies 54-56

Carsonite Noise Barrier Wall 54
Diffusion and Thermal Heat Treatment of Bulk Powders 55
Evaporator Fan Controller for Medium-Temperature Walk-In Refrigerators 56
Foamed Recyclables 57
In-Situ, Real Time Measurement of Melt Constituents 58
Mobile Zone Optimized Control System for Ultra-Efficient Surface-Coating Operations 59
Peripheral Mower Blade 60
SIDTEC™ Condenser Maintenance Program 61
Torsional Cylindrical Impulse Shear Soil Test for Earthquake Design 62
WeldComputer™ Resistance Welder Adaptive Control 63

Forest Products Technologies 64-68

DELTA T Dryer Control System 64
Detection and Control of Deposition on Pendant Tubes in Kraft Chemical Recovery Boilers 65
Lignin Separation and Epoxide-Lignin Manufacturing 66
Removal of Bark from Whole Logs 67
Thermodyne™ Evaporator – A Molded Pulp Products Dryer 68

Metal Casting Technologies 69-71

Ceramic Composite Die for Metal Casting 69
Laser-Based Laminated Object Manufacturing 70
Meta-Lax Stress Relief Process 71

Mining Technologies 72-73

A Mechanical Stemming Device for Use in Explosive Loaded Blast Holes 72
Wireless Telemetry for Mine Monitoring and Emergency Communications 73

Petroleum Technologies 74-81

Absorption Heat Pump/Refrigeration Unit 74
Dynamic Gas Pulse Loading System 75
Mercury-Free PVT Apparatus for Thermophysical Property Analysis of Hydrocarbon Reservoir Fluids 76
Method and Apparatus to Revive Gas Wells 77
New Technology for Sulfide Reduction and Increased Oil Recovery 78
Reciprocating Rod Pump Seal Assembly 79
The Russell Self-Piloted Check Valve 80
V-PLUS™ Refrigerant Oil Cooling System 81

Steel Technologies 82-83

Method and Apparatus for Handling and Dry Quenching Coke 82
Recovery of Acids and Metal Salts from Pickling Liquors 83

Affordable Metallic Recovery System Saves Energy and Reduces Landfill Waste Streams

Aluminum foundries and melters typically generate metallic skimming and drosses during industrial processes. While equipment is commercially available to recover a portion of the contained metallics from skimmings and drosses, the capital investment for the equipment has precluded its application with smaller melting units such as crucible or reverb melters. With assistance from DOE's Industrial Technologies Program, Q.C. Designs, Inc. has developed an improved reclaiming process specifically to recover the metallics from small quantities of dross and skim. The process has recovered as much as 80% of the contained metal at the point of generation.

In operation, the process may be run either manually, with power-assisted stirring, or with a fully automatic programmed hydraulically actuated cycle. The operation is environmentally friendly and reduces the amount of smoke and fumes normally associated with dross processing. Foundries reduce their melting losses by the in-plant recovery of drosses and their contained metals, which can then be reused directly without realloying.

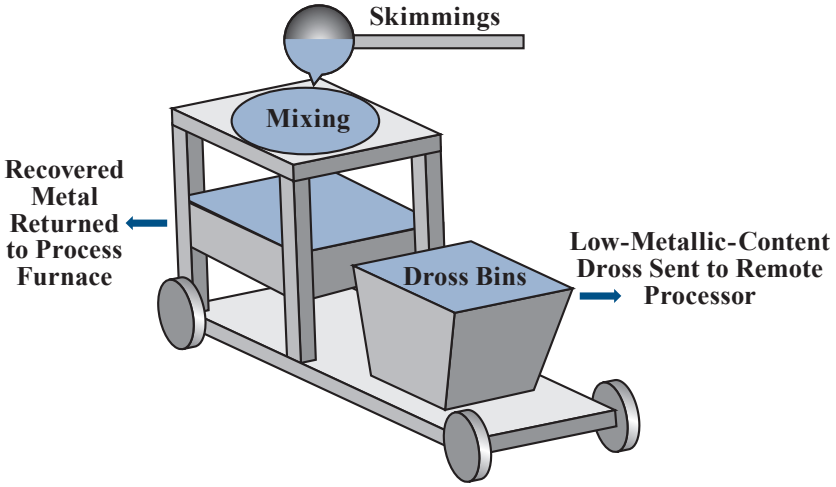

Portable Aluminum Reclaimer

Overview

- Available from Q.C. Designs, Inc.
- Commercialized in 2001

Applications

In-plant aluminum foundry dross and skimming recovery

Capabilities

- Processes hot dross in quantities from 20 to 500 lb.
- Allows automatic processing or manual operation.
- Features sizes for applications in different foundry installations.

Benefits

Energy Savings

The recovered metal from the new system may be reintroduced into the process in molten form, saving the energy required to remelt an ingot recovered in a traditional process. Less energy is required to transport and move the dross to an outside processor because the system is on-site, and the material does not have to be remelted for secondary recovery of the metallics.

Productivity

The improved ability to decrease melting losses contributes directly to profits. Typical compensation for dross materials from outside processors is 10% to 20% of true value because the generating foundry has to bear the costs of transportation, remelt and processing, landfill of the waste, and return of the recovered material. In-plant processing eliminates most of these costs.

Waste Reduction

The technology avoids sending process salts to landfills and recovers a higher percentage (up to 80%) of metallics than current methods.

Contact: Q.C. Designs, Inc. - Daniel Grotke - (269) 983-6859 - dgrotke@cs.com

Computerized Recovery System Separates Aluminum from Mixed Recyclable Streams

With assistance from the Department of Energy's Inventions and Innovation Program, MSS, Inc., developed a separation technology that electronically detects and removes aluminum cans from municipal solid-waste streams. The separation technology discriminates against tramp ferrous metals in the feed stream. Eddy current sensors first detect and identify aluminum, and after detection, a precisely metered air jet pulse removes the aluminum. The aluminum goes to secondary processing; the other goes to conventional recycling. This recovery system is an improvement over a previous version of the system (the ELPAC System) that had been proven in years of demanding service in solid-waste and glass cullet applications.

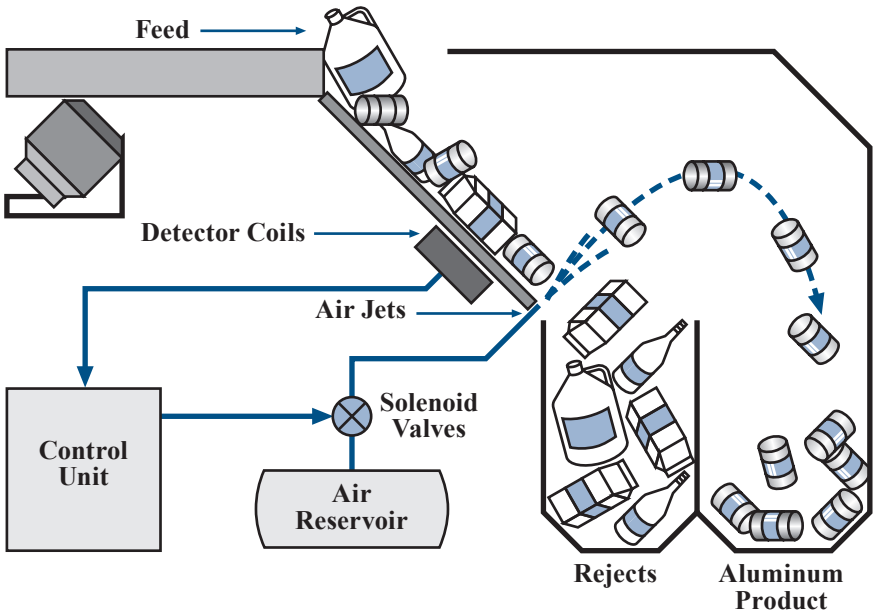

Aluminum-Rich Concentrate from Municipal Waste

Overview

- Developed by MSS, Inc.
- Over 60 installations for glass recycling and aluminum recovery currently operating worldwide

Applications

Glass and aluminum industries to remove metallic contaminants from recycled glass cullet and granulated plastics and to recover aluminum cans from mixed recyclable streams in materials recovery facilities (MRFs)

Capabilities

- Operates automatically using a microprocessor that controls position, speed, and size of aluminum in waste.
- Available in modular units with capability to process 1200, 2000, and 3000 cubic feet/hour of commingled feed.
- Can control up to 256 detection channels and handle feed system widths of up to 256 inches.

Benefits

Energy Savings

Increases the useful yield of glass and aluminum recycled streams. Using recycled aluminum and glass in production reduces energy consumption compared with glass and aluminum from raw materials.

Emissions Reductions

Using recycled aluminum and glass in production lowers furnace emissions.

New Furnace Reduces Energy Consumption and Enhances Performance

Micropyretics Heaters International has developed a technology with the potential to improve the performance of aluminum melting furnaces. The production of primary and secondary aluminum ingots typically uses melt furnaces that rely on resistor elements, induction heating, or gas/oil burners for the heat sources. Such furnaces are either energy-inefficient or environmentally unfriendly because they generate combustion emissions or use electricity resources poorly.

The improved melt furnace design uses convective heat transfer instead of radiant heat transfer for an energy- and cost-saving design. The design eliminates combustion emissions, reduces noise, overcomes melt oxidation, and allows gas selection for the melting process. The advanced furnaces are available as ingot-loading furnaces for small casters and rotary furnaces for medium- and large-scale casters. The rotary furnaces also melt both ingots and aluminum scrap.

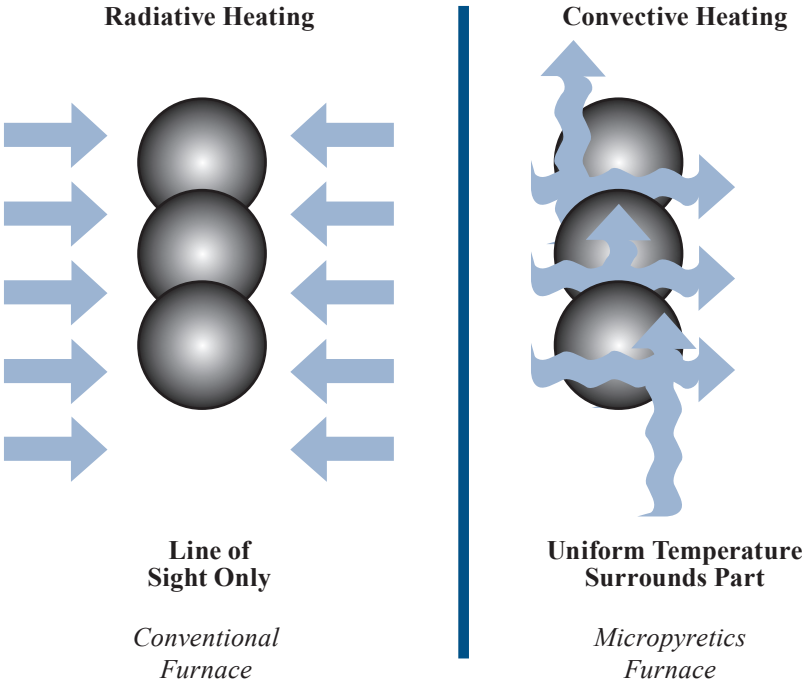

Overview

- Invented by Micropyretics Heaters International
- Commercialized in 2001
- 1 unit operating in 2003

Applications

Ingot-loading furnaces for small casters and rotary furnace applications for medium and large-scale casters

Capabilities

- Can be used in rotary furnaces to melt both ingots and aluminum scrap.
- Results in a low dross content of 0.3% to 1%.
- Reduces the typical furnace footprint by 80%.

Benefits

Energy Savings

The new furnace design uses very low power, about 0.15 kWh/lb of aluminum for the small ingot-loading furnaces. An estimated 70% improvement in energy efficiency is also possible.

Environmental

No combustion is involved in the improved process, so typical combustion-related pollution is not present. The technology replaces a traditional natural gas process with an electric system, removing all the on-site emissions. The technology also produces very low levels of noise pollution compared with a typical application.

Profitability

The new furnace has significantly lower costs than a typical melter furnace. The technology may reduce dross and prevent the evaporation of low-vapor-pressure alloying additions.

Contact: Micropyretics Heaters International, Inc. - Kevin Foston - (513) 772-0404 - sales@mhi-inc.com

Aqueous Cleaner and CleanRinse™ Recycling System

New Recycling System Improves Aqueous Cleaning System

Most traditional systems for pollution control focus on the end-of-pipe treatment and disposal of waste. The U.S. Environmental Protection Agency (EPA) has mandated a new emphasis on improved resource usage that focuses on source reduction. Many methods, including filtration, reverse osmosis, de-ionization, and distillation, could help meet this goal but often have high energy needs or produce additional waste streams.

With assistance from DOE's Inventions and Innovation Program, EcoShield Environmental Systems developed a simple mini-reactor system that chemically converts organic oily contaminants into surfactants and emulsifiers. This conversion increases the cleaning solution's ability to remove oil, grease, and dirt. The system regenerates the cleaning solution on site, creating less waste water and often decreasing the cleaning time required. The system has low energy needs and can be coupled with an energy-efficient bioreactor that will convert excess soap into biomass. The current applications of the technology have resulted in tremendous waste prevention and large cost savings.

Benefits

Productivity

The system extends the life of the cleaning solution and rinse water, which reduces the costs associated with waste water disposal and chemical consumption. The system also has low operational costs (less than 5 cents per hour).

Waste Reduction

The technology reduces the chemicals typically consumed in the traditional cleaning process and extends the life of the cleaning solution. The system can be integrated with EPA's permanent pollution prevention plans.

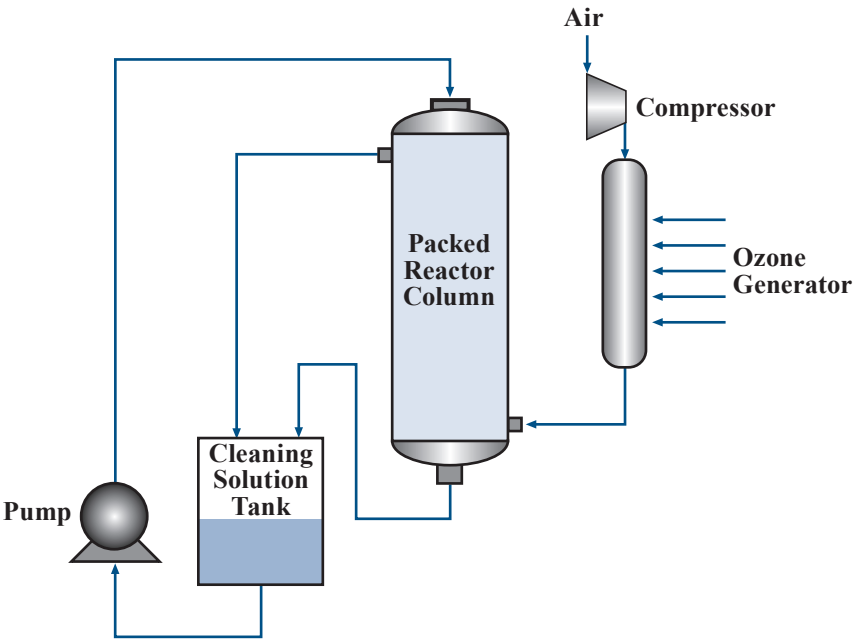

EcoShield Aqueous Cleaner and CleanRinse Recycling System

Overview

- Developed by EcoShield Environmental Systems under an exclusive license from EcoShield Environmental Technologies Corporation
- Commercialized in 1997

Energy Savings

(Trillion Btu)

Cumulative through 2003	2003
0.104	0.015

Emissions Reductions

(Thousand Tons, 2003)

Particulates	SO_X	NO_X	Carbon
0.0	0.0	0.002	0.235

Applications

Neutral to basic pH applications where aqueous waste streams containing organic contaminants are to be cleaned

Capabilities

- Converts excess soap to biomass using an optional companion bioreactor.
- Offers custom sizes and configurations for wash racks, cabinet washers, and automated lines.
- Is applicable for high-temperature installations.

Noise Barrier Offers Environmental Solutions and Delivers Superior Sound Reduction

Noise from highways and mass transit systems is a frequent complaint of neighboring residents and is often a concern of regional governments. Traditional sound barriers technology is often expensive to install, and made from concrete or wood materials, limiting traditional noise barriers as a solution to noise pollution.

With assistance from DOE's Inventions and Innovation Program, Carsonite International developed a system to provide sound barriers that use waste tire rubber to block noise. The technology uses a recycled rubber compound as the center in a composite channel design. The unique design of the sound barrier allows the sections to be stacked to the necessary height. Because the sections are lightweight (7.5 lbs per square foot), installing the noise barrier is inexpensive and straightforward. The technology is durable and outperforms traditional noise barrier materials.

Research by the U.S. Environmental Protection Agency estimates that one tire per person is generated as scrap each year. The Carsonite sound barriers use approximately 20,800 tires per mile of barrier. Using scrap tires in the sound barrier is more energy efficient than using the tires for combustion fuel or placing them in landfills. This sound barrier technology effectively reduces both noise and waste pollution in an innovative way.

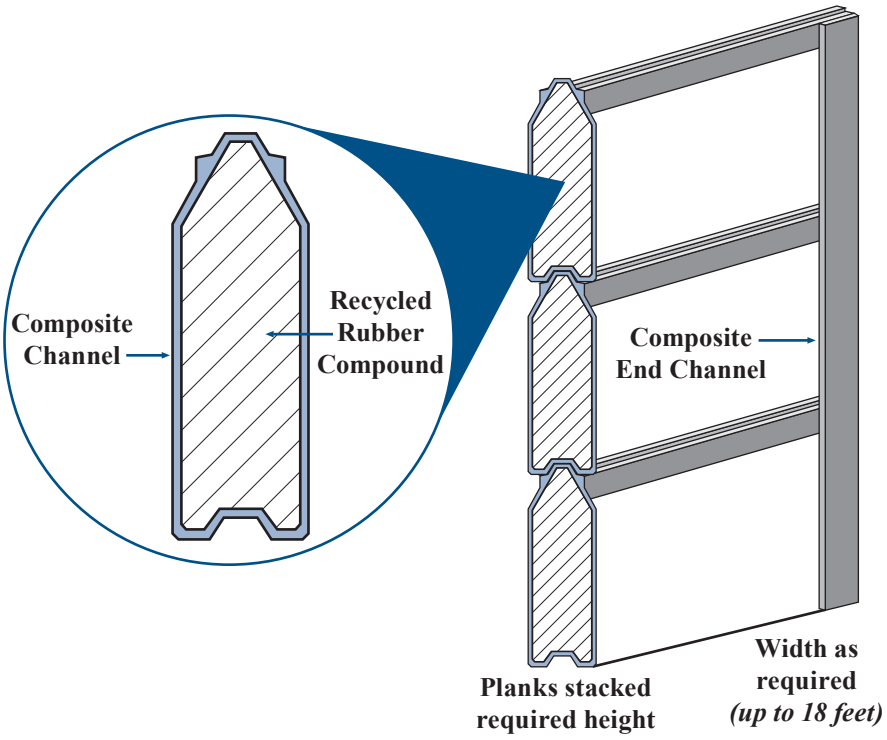

Carsonite Noise Barrier System

Overview

- Invented by the Carsonite International Company
- Commercialized in 1994
- Installations in 14 states

Applications

Noise reduction along highways, mass transit lines, crowded residential roads, and other high traffic areas

Capabilities

- Measures a Sound Transmission Class of 36.
- Exceeds guidelines for noise reduction coefficient and wind loads set by State Departments of Transportation and the American Association of State Highway and Transportation Officials.
- Withstands harsh weather conditions.
- Avoids the need for heavy equipment for installation.
- Can be installed on existing structures without additional reinforcement.

Benefits

Noise Reduction

Provides sound wall performance more effective than concrete, metal, or wood walls while using unwanted tire waste in a beneficial way.

Profitability and Productivity

Lightweight design reduces the installation cost while the durable materials increase the system's performance.

Contact: Carsonite International Corporation - Bill Ward - (803) 943-9115 - bward@carsonite.com

New Process to Heat Treat Bulk Metal Powders Reduces Processing Times and Produces Superior Product

Through a grant from the Department of Energy's Inventions and Innovation Program, Kemp Development Corporation developed a new process that uses a sealed rotary kiln under a vacuum or controlled atmosphere to heat treat bulk metal powders and to treat solid parts with bulk powders. The tumbling action of the rotating cylinder causes the metal particles to flow in a fluidized manner and to experience constant mixing. This action constantly exposes a new layer of metal particles to the hot cylinder surface inside the kiln, increasing heat transfer several fold. In addition, the internal atmosphere prevents the formation of oxides on the surface of the metal particles during heating and cooling periods. Adjusting the rotation rate of the drum produces a several-fold increase in gas-phase reaction kinetics. In addition, controlling drum speed can vary particle-flow behavior over a wide range. Incoming materials can be precipitated out of the gas to provide chemical vapor deposition on the surface of each particle. If needed, residence times can be extended indefinitely to ensure complete diffusion within particles.

Benefits

Environmental Savings
Uses 90% less greenhouse gases, methane, and hydrogen in processing.

Productivity
Reduces processing times to coat and heat-treat materials while producing a superior product. Can create new products that take advantage of more thorough powder processing.

Profitability
By completely eliminating the need to break apart powders, it reduces annealing and associated costs by about 90%.

Reliability
Corrosion- or erosion-control coatings increase end-product lifetimes.

Waste Reduction
Automated loading and unloading of bulk powders reduces or eliminates waste.

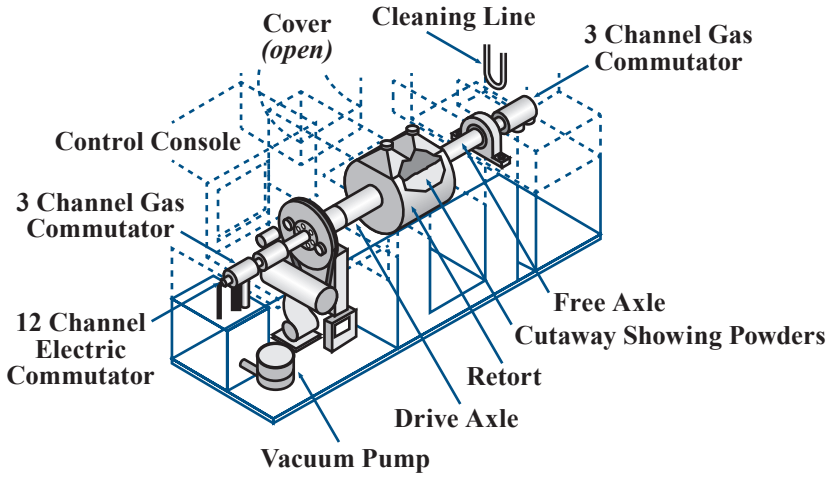

Diffusion and Thermal Heat Treatment of Bulk Powders

Overview

- Commercialized by Kemp Development Corporation in 1998
- Licensed to ACTON Materials, Inc., for treating powders and to PMAC for surface treating solid parts

Applications

- Heat treating powdered metal
- Alloying powdered metals to produce aluminides, carbides, and nitrides and surface treating of solid parts; i.e., boronizing, aluminizing, nitriding, and carburizing
- Processing steel waste streams to improve recycling of ferric chloride
- Refining powder metals; i.e., tungsten or cobalt from ores

Capabilities

- Can process many types of bulk powders, including those destined for frits, glasses, ceramics, refractories, metals, and composites.
- Can heat treat bulk powders to 1050°C.
- Can coat metals on ceramics and ceramics on metals.
- Can produce encapsulated metal powders for thermal storage (with a temperatures range of cryogenic to over 1,000°C), which can be melted without losing powder characteristics.

Evaporator Fan Controller for Medium-Temperature Walk-In Refrigerators

Fan Controller Saves Energy in Two Ways

With assistance from DOE's Inventions and Innovation Program, Advanced Refrigeration Technologies (ART) commercialized an innovative control strategy for walk-in refrigeration systems. The ART Evaporator Fan Controller is inexpensive and easy to install.

The concept and operation of the ART controller is technically quite simple: refrigerant flow is sensed by temperature differential at the expansion valve within the evaporator. When refrigerant is not flowing through the evaporator/evaporators, voltage is dropped to the evaporator fans, saving energy in two ways. First and foremost, the evaporator fans consume less energy. Secondly, heat introduced to the refrigerated chamber from the evaporator fan motors is decreased. This decrease in heat, coupled with a decrease in thermal inversion, results in a decreased overall box load, thereby reducing the compressor/condenser on-duty cycle. The slow fan speed maintains air circulation to avoid temperature stratification. The lower air speed also maintains natural product moisture, thereby increasing shelf life.

Benefits

Energy Savings
Reduces evaporator and compressor energy consumption by 30% to 50%.

Productivity
Even temperature distribution and lower air velocity improve working conditions and result in workers keeping refrigerated spaces closed.

Product Quality
Less air movement maintains the natural moisture in open product, so freshness and shelf life is increased without affecting overall relative humidity within the refrigerated chamber.

Profitability
Lower running times increase equipment life span and cut maintenance and replacement costs.

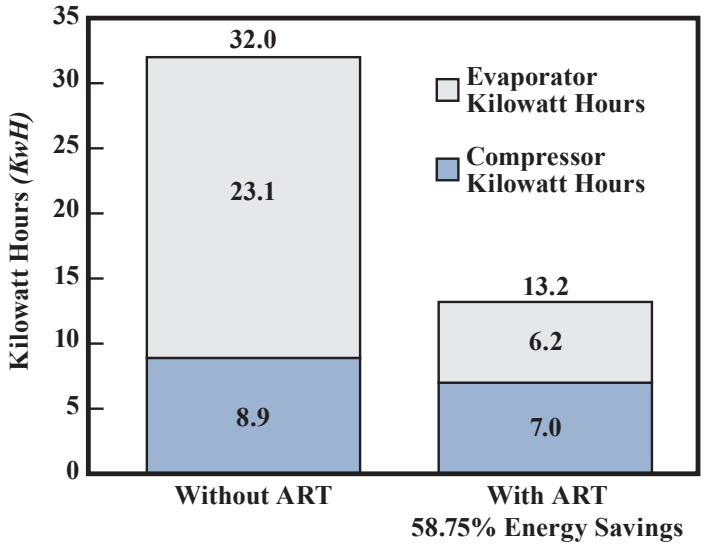

Average Daily Energy Consumption for a 29,200 Btu Evaporator

Overview

- Developed by Advanced Refrigeration Technologies, Inc.
- Commercialized in 1997
- Over 1375 units operating in 2003

Energy Savings
(Trillion Btu)

Cumulative through 2003	2003
0.038	0.015

Emissions Reductions
(Thousand Tons, 2003)

Particulates	SO_X	NO_X	Carbon
0.0	0.003	0.002	0.297

Applications

Decrease in energy consumption in low- and medium-temperature walk-in refrigerationand freezer systems in restaurants, cafeterias, mess halls; grocery and convenience stores; hospitals; colleges and other educational facilities; naval vessels; and custom industrial and commercial applications

Capabilities

- Control logic cuts evaporator and compressor energy consumption and lengthens component life.
- Controller can be retrofitted into existing refrigeration systems or incorporated into the design of new equipment.
- New models have the capability to monitor energy use and savings associated with the ART controller. Monitored information may be downloaded to a PC.

Contact: Advanced Refrigeration Technologies, Inc. - Clare Schrum - (909) 689-7281 - cschrum@artcontrollers.com

New Process Allows Coal Ash to be Made into Building Material Products

With a grant from DOE's Inventions and Innovation Program, Century-Board USA, a licensee of Ecomat, Inc., has a fully developed process to convert solid wastes into synthetic building materials.

The process consists of mixing up to 85% solid waste into a modified polyester polyurethane resin with special additives. This polymer system is a thick liquid that is poured into discrete molds or continuously cast, as is done with the 'plastic' lumber. This thick liquid then forms and fills all the crevices of the mold and produces a lightweight, hard, and tough product. The material does not contain thermoplastics such as polyethylene or PVC, wood or sawdust unless requested by the customer.

Benefits

Productivity and Profitability

Below the cost of many competitive materials and can be reground and reused in the same process. It is lightweight and can be 1/10th the density of concrete.

Product Quality

Their synthetic building material products are maintenance-free, fire and weather resistant, lightweight and tough.

Waste Reduction

Reduces landfilling of coal ashes from utility power plants.

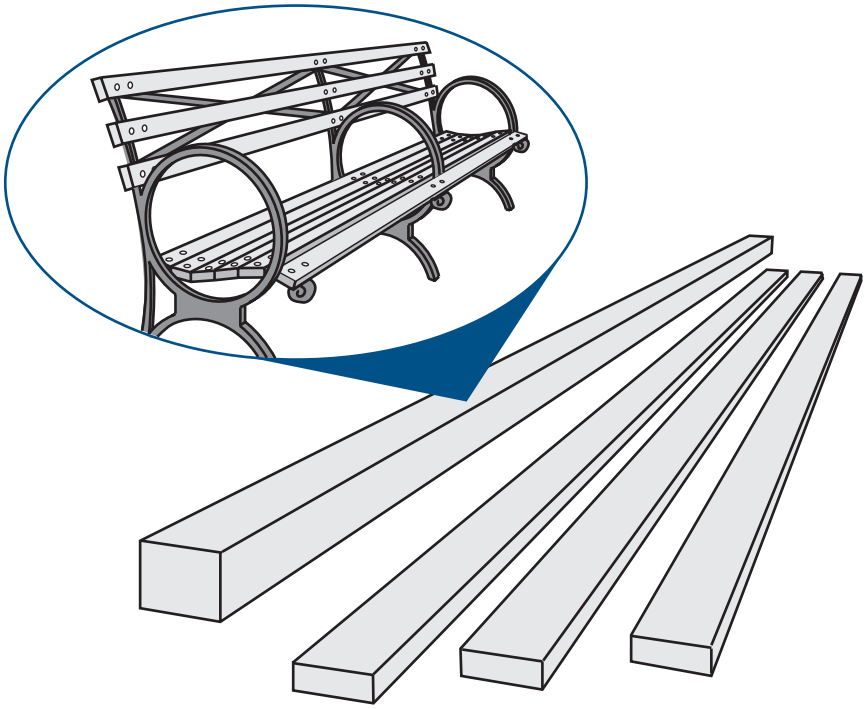

Foamed Recyclable Building Material

Overview

- Developed by Century-Board USA
- One plant operating in the United States with the capacity to process 1 ton/hr of coal fly ash to make plastic lumber
- 1 pilot plant is making synthetic structural lumber using coal fly ash as the main ingredient

Applications

Among the products made with the Century-Board process are roof tiles, artificial slate, ceramic-like floor tiles, siding, molding, doors, utility poles, marine and dimensional lumber, picture frames, office partitions, and wallboard

Capabilities

Even though Century-Board will focus on the fly ash-based lumber, the following have been successfully tested in their process as the major ingredients: waste glass, sand, ashes from wood and municipal waste burning, wood flour, waste from metal smeltings, red mud from aluminum refining, mixed recycled plastics, coral dust, rice hulls and rice hull ash, agricultural plant ashes, waste cotton and polyester fibers, paper processing wastes, heavy metal contaminated waste, contaminated soil, foundry sand, sewage sludge, slate dust, and rubber tires.

New Laser System Provides Real-Time Measurements for Improved Product Quality Control

A new probe uses laser-induced breakdown spectroscopy (LIBS) to determine the elemental constituents in an aluminum, glass, and steel melt. This probe measures continuously and in-situ at any point in the melt, thus providing spatial and temporal real-time data. The probe uses a pulsed (5-10 ns duration) Nd:YAG laser at 532 nm that is focused, through a fiber-optic cable, into a molten aluminum sample, generating high-temperature plasma consisting of excited neutral atoms, ions, and electrons. Any chemical compounds present in the sample are rapidly separated into their constituent elements. The laser-generated plasma is allowed to equilibrate several microseconds after the laser pulse, and then a spectrograph fitted with an intensified charge-coupled array detector collects and disperses optical emissions from neutral and ionized atoms. The line radiation signal amplitude is calibrated quantitatively, thus providing the concentration of each element present.

In the glass industry, the probe can be used to monitor 1) trace alkali metal content in electronic glasses, 2) glass compositions to meet the defined specifications for waste-vitrified glasses and sealing glasses, and 3) the concentration of refractory dissolved in the glass to diagnose the state of the furnace. The probe has several applications in the aluminum and steel industries. For example, the probe can be used for in-line alloying to measure chemical content during a pour and for continuous and semi-continuous furnace operations to minimize the current practice of off-line sampling and measurement. In other applications, the probe can perform in-line monitoring of impurity removal from the melt, such as removing magnesium from molten aluminum, and can provide real-time data to validate computer simulations and model furnaces.

Benefits

Productivity

Determining melt constituents and temperature in-situ, real-time, and simultaneously eliminates the aluminum and steel furnace idle time now required for off-line measurement of melt constituents.

Product Quality

Providing data for use in a feedback control loop to control the furnace operation in real time increases product quality.

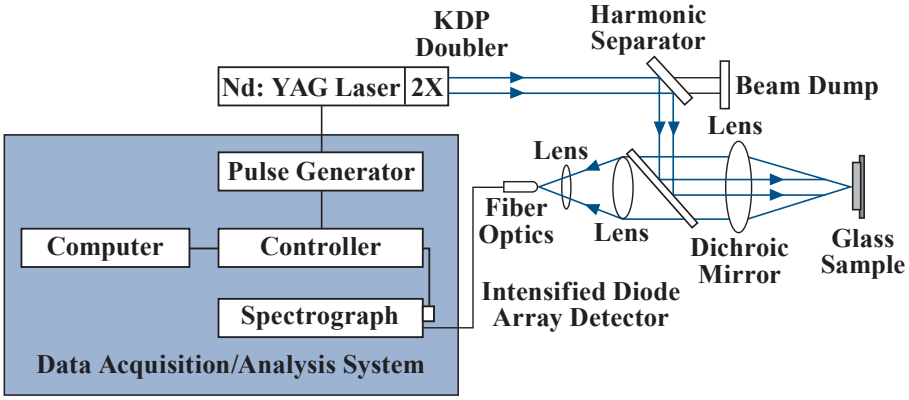

Laser-Induced Breakdown Spectroscopy System

Overview

- Developed by Energy Research Company
- Marketed by Solios Thermal for the aluminum industry
- Installed on an aluminum melt furnace in 2003
- Installed on a glass melt furnace in 2004

Energy Savings

(Trillion Btu)

Cumulative through 2003	2003
0.037	0.037

Emissions Reductions

(Thousand Tons, 2003)

Particulates	SO_X	NO_X	Carbon
0.0	0.0	0.004	0.587

Applications

Identifies elemental constituents in metal and glass melts during the alloying and fabrication process

Capabilities

- Allows 10 to 50 measurements/second at a commercial cost (~$10k) similar to solid state lasers
- Measures aluminum melt constituents with 5% accuracy and a 0.002% minimum detection limit.
- Monitors trace alkali metal content in electronic glass compositions.

Contact: Energy Research Co. - Robert DeSaro - (718) 442-2725 - rdesaro@er-co.com

Mobile Zone Optimized Control System for Ultra-Efficient Surface-Coating Operations

New Surface-Coating Technique Reduces Air Pollution and Energy Use

Volatile organic compounds (VOCs) are released during the application of spray coatings in paint enclosures, which expose workers to toxins, create air pollution emissions, and create fire or explosion hazards. To meet safety and environmental regulations, paint booths are usually ventilated with 100% outside air, which is then heated or cooled to maintain comfortable temperatures and control pollution emissions.

A new spray booth technology developed by Mobile Zone Associates with the help of a grant from the Inventions and Innovation Program greatly reduces the amount of energy needed to heat and cool ventilation air during surface coating operations. The Mobile Zone system separates the human painter from the contaminated air of the spray booth by providing the painter with a separate, mobile work platform or cab during spray coating operations. The cab is flushed with fresh air, while the rest of the spray booth uses recirculated air. The design meets OSHA regulations and National Fire Protection Association guidelines. The technology is currently being used by the US Army at Fort Hood, Texas for consideration of system wide use.

Benefits

Profitability

The technology reduces the size of heating, cooling, and pollution control equipment between 60% and 98%, which offers significant savings in associated capital and energy costs.

Productivity/Product Quality

Testing has shown the technology is able to maintain or improve production speed and quality.

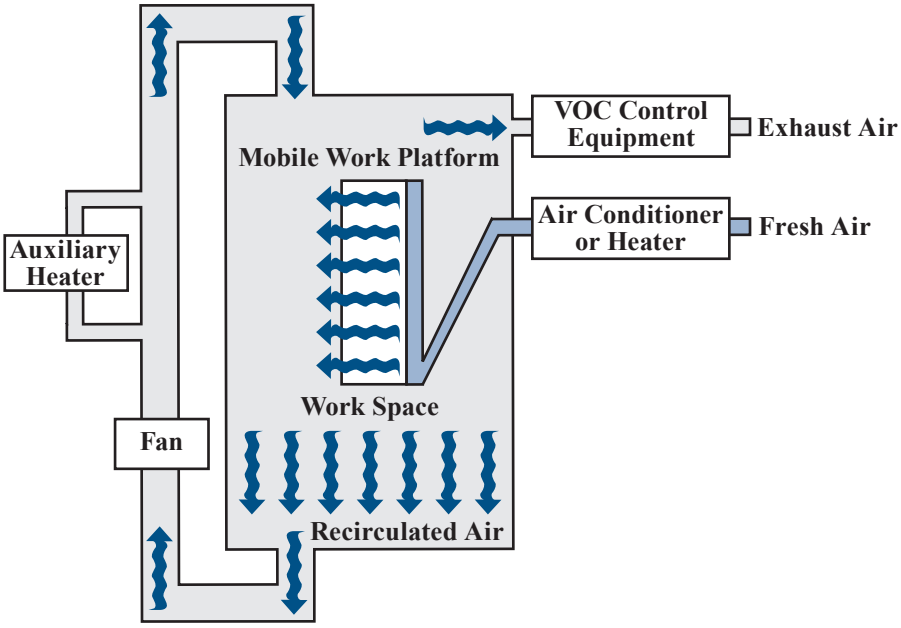

Air Flow in Paint Spray Booth with Mobile Zone System

Overview

- Developed by Mr. Clyde Smith and Mr. William Brown of Mobile Zone Associates
- 1 installation operating in the United States in 2003

Energy Savings

(Trillion Btu)

Cumulative through 2003	2003
0.017	0.007

Emissions Reductions

(Thousand Tons, 2003)

Particulates	SO_X	NO_X	Carbon
0.0	0.001	0.001	0.136

Applications

Applying sprayed surface coatings to chairs, tables, motorcycles, tractors, railroad cars, and aircraft in either side-draft or down-draft booths

Capabilities

Reduces the ventilation, heating and cooling requirements by directing a sufficient, but small, amount of fresh air to the painter and recirculated air to the remaining unoccupied space within the spray booth. Meets existing OHSA, EPA and NFPA standards for worker conditions.

Contact: Mobile Zone Associates - Clyde Smith - (615) 352-8763 - clydefot@bellsouth.net

Innovative Mower Blade Design Improves Efficiency and Worker Safety

With assistance from the Department of Energy's Inventions and Innovation Program, Peripheral Mowers, Inc., has developed the Peripheral Blade Mower. The new and novel blade design eliminates the likelihood of accidents caused by mower-thrown objects, improves cutting efficiency, and is also adequate for mulching.

The Peripheral Blade Mower is actually a series of circular cutting disks, each about four-inches wide, mounted side-by-side along a horizontal shaft. Each disk has four horizontal cutting edges, or peripheral blades, spaced quarterly around the disk. With each revolution of the blade, the grass is cut, mulched, and then centrifugally thrown down into the lawn's subsurface for decomposition into the soil.

A primary advantage of the Peripheral Blade Mower is increased safety. Unlike rotary motors, whose blades rotate around a vertical shaft and tend to fling debris from under the mower deck, the Peripheral Blade Mower significantly reduces the chance of injury by projecting any debris straight down toward the ground. In addition, the Peripheral Blade Mower requires slower blade-tip speeds than conventional mowers, which allows a smaller, more efficient engine to be used, significantly saving energy and up to 30% in fuel costs.

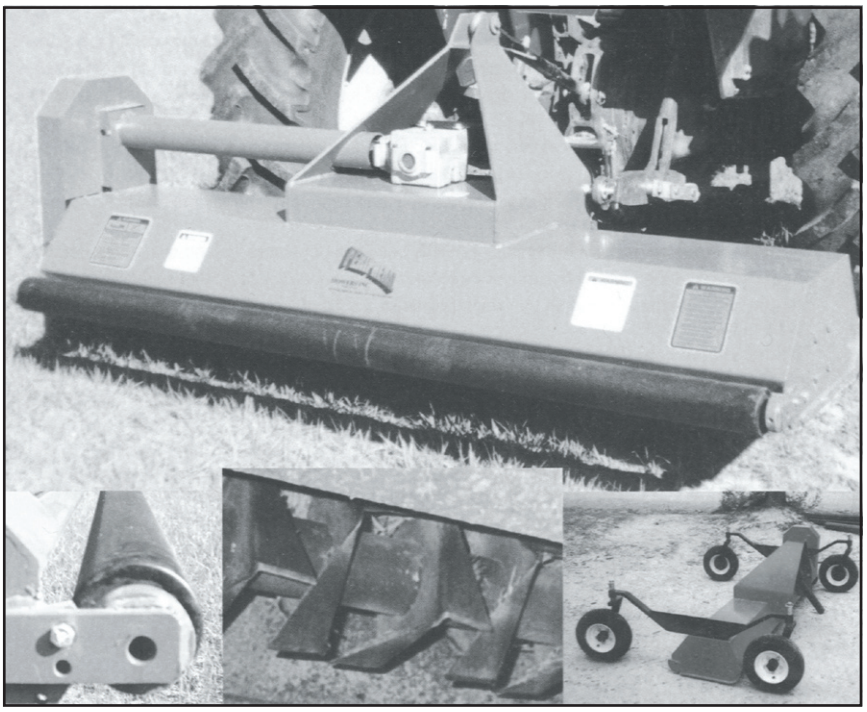

The Peripheral Blade Mower

Overview

- Developed and marketed by Peripheral Mowers, Inc.
- Commercialized in 1999
- 63 units sold since 1999

Applications

- Commercial mower industry
- Mulching
- Hay conditioning
- Material shredding in right-of-ways

Capabilities

Offers increased safety by projecting any debris straight down toward the ground and not from under the mower deck.

Benefits

Energy

Reduces energy consumption and fuel costs by 30% over conventional mowers.

Waste Reduction

Provides a fine mulching cut, thus alleviating grass clippings, which require disposal.

Processing Cost Reduction

Increases life expectancy of mower blades and reduces processing costs.

Contact: Peripheral Mowers, Inc. - John A. Darden - (229) 546-4715 - mmldarden@planttel.net

New Condenser Tube Cleaning Technology Removes both Soft and Hard Deposits

With assistance from the Department of Energy's Inventions and Innovation Program, Superior I.D. Tube Cleaners (SIDTEC) Inc. invented the SIDTEC mechanical on-line condenser maintenance service program for thermal power plants. In power plants that use surface water to cool condensers, waterborne debris and microorganisms accumulate on strainers and pipes, reducing water flow and the condenser's heat transfer ability. Condensers must be cleaned regularly to maintain system efficiency and to keep the power plant operating.

The SIDTEC program incorporates a two-part tube cleaner and a recovery system. The cleaning elements, or Rockets™, are injected into the condenser cooling water system, conveyed through the condenser tubes with the normal flow of water, and recovered in the discharge. The cleaning element contacts the tube surfaces, wiping away mud, silt, and biofouling deposits. Near-neutral buoyancy ensures even distribution throughout all condenser tubes. The product replaces conventional cleaning systems, such as automatic tube-cleaning systems or sponge balls; chemicals used to clean the condensers; and off-line mechanical tube-cleaning, which is costly in manpower and lost generation while the unit is off-line.

Benefits

Profitability

Potential savings for one 500-MW plant are $350,000 annually.

Reliability

Rocket tube cleaners do not impact circulating water pump performance.

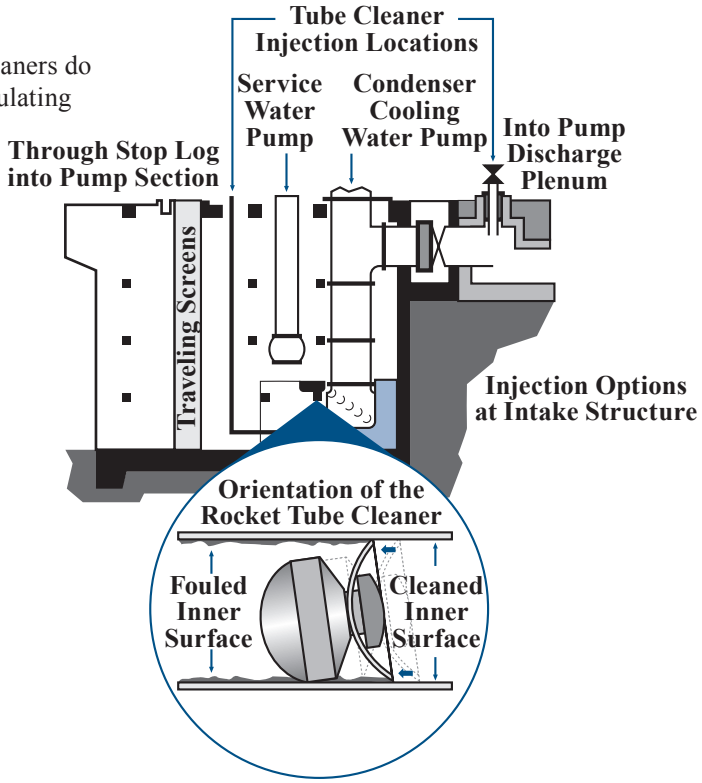

On-line Condenser Tube Cleaner

Overview

- Invented by James Echols of Superior I.D. Tube Cleaners (SIDTEC) Inc. and licensed to GE Infrastructure Water and Process Technologies
- Commercialized in 1992
- 12 plants currently under long-term contracts valued at almost $2.8 million annually in the United States

Energy Savings

(Trillion Btu)

Cumulative through 2003	2003
136	38.8

Emissions Reductions

(Thousand Tons, 2003)

Particulates	SO_X	NO_X	Carbon
0.174	8.38	6.24	762

Applications

Maintaining waterside tube cleanliness in the main steam condenser in thermal power plants

Capabilities

- Mechanically removes condenser tube deposits using proprietary, ultra-high molecular weight polyethylene Rocket tube cleaners.
- Near-neutral buoyancy provides even distribution through all condenser tubes.
- Design handles both soft and hard deposits using nonabrasive or abrasive cleaning elements.
- Skimming recovery systems have greater than 99.95% efficiency and require no downtime for skimming system installation.

Advanced Soil-Testing Technique Offers Potential for Lowering the Cost of Building Earthquake-Resistant Structures

With assistance from the Department of Energy's Inventions and Innovation Program, Dynamic In-Situ Geotechnical Testing, Inc., designed and tested a new soil-testing system for engineering new structures. Its Torsional Cylindrical Impulse Shear system creates and measures an impulse soil shear to gather data for critical structural designs (e.g., oil pipelines, power plants, bridges). The new system is potentially better than previous methods because testing is conducted onsite without disturbing the soil to the point of skewing results. The improved data is vital to structural and safety engineers who must design foundations and structures considering the strength of the soils on which a facility rests. Raising the level of certainty about soil characteristics in both low-and high-activity seismic zones can prevent overbuilding and wasting energy and material resources. In active seismic zones, better designed structures will minimize disruption of vital services. The Federal Highway Administration, Florida Department of Transportation, and National Science Foundation have all implemented system tests.

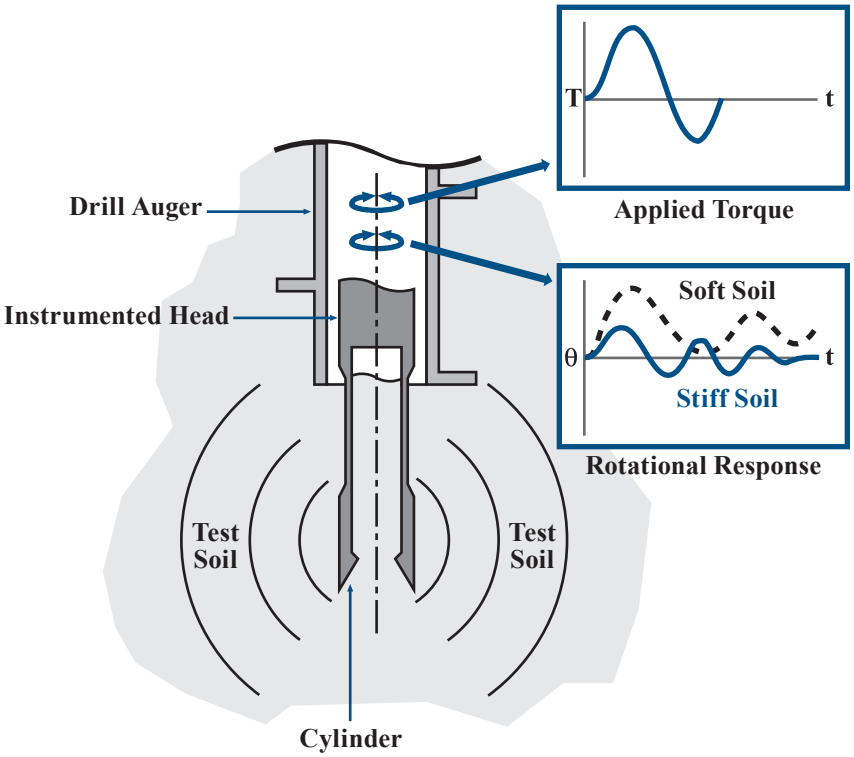

Torsional Cylindrical Impulse Shear Soil Test For Earthquake Design

Overview

- Developed by Dynamic In-Situ Geotechnical Testing, Inc.
- Market introduction in 1992

Applications

Engineering structures and infrastructure for industrial manufacturing facilities, utilities, and the oil and gas industry

Capabilities

- Furnishes reliable site data on soil characteristics using a less-destructive method that improves accuracy.
- Tests provide soil data for seismic resistant design.

Benefits

Product Quality

Increases safety and reliability of structures, especially those located in seismically active areas.

Energy Savings

Accrue indirectly from the ability to design structures with greater certainty using the most appropriate materials.

Emissions Reductions

Offshore oil and gas rigs and pipelines built to better standards lessen the chances of catastrophic failures and major fuel spills.

WeldComputer™ Resistance Welder Adaptive Control

Computer-Controlled Resistance Welding Saves Energy and Improves Quality

The invention is a sophisticated computer-controlled resistance welding system designed particularly for resistance spot welding. Welding is one of the most common manufacturing operations, and resistance welding is one of the oldest and most common ways of welding. Until recently, however, resistance welding—a function of physical electrode force, material thickness and resistance, and time, frequency, and voltage of the electric current—was more of an art than a science. With help from the Inventions and Innovation Program, WeldComputer has improved the science of resistance welding and made the technology available to general commercial industries. The control system had previously proven effective for quality improvement and energy savings in the aerospace and defense contract industries, but was considered too expensive for more general commercial operations.

The WeldComputer system consists of a programmable power controller, line voltage monitoring and compensation equipment, and other sensors and compensation equipment that monitor the welding process and make real-time adjustments. The technology is less energy intensive than other metal joining methods through precise control of electric current. The new L-Series systems are affordable and have tremendous potential for use in the automotive, appliance, and other industries.

Benefits

Energy Savings

Reduces energy use for resistance welding by precise control of weld power.

Productivity

Productivity gains of 90% to 200% due to decreased welding times and a 55% reduction in scrap material costs due to improved welding accuracy.

Product Quality

Performs real-time diagnostics during each weld, precisely regulates voltage to ensure a high-quality process, and documents weld integrity.

Profitability

Reduces the number of rejected welds and eliminates the need for destructive weld testing, thus saving money, materials, and energy. Also allows more effective use of resistance welding, which is less expensive, faster, more reliable, and less energy intensive than other joining methods.

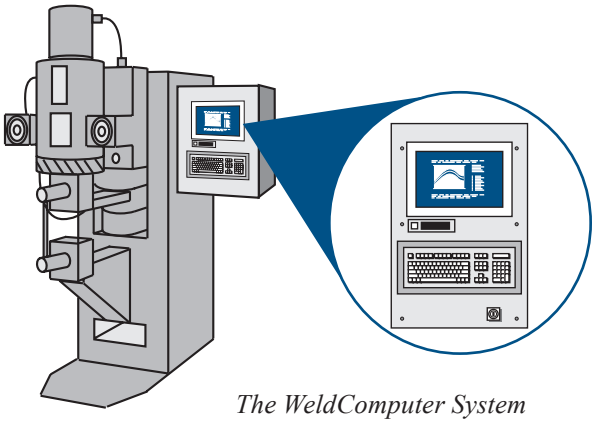

The WeldComputer System

Overview

- Invented and commercialized by WeldComputer Corporation
- Commercialized in 1995
- Captured significant percentage of niche market
- More than 100 controllers have been installed worldwide

Applications

Used in the aerospace, defense, automotive, and appliance industries, and in general commercial manufacturing areas

Capabilities

- Performs real-time diagnostics during each weld.
- Automatically adjusts welding voltage to remedy variations detected as the weld is made.
- Allows more effective use of resistance welding, which is less expensive, faster, more reliable, and less energy intensive than other joining methods.
- Documents the integrity of each weld.

DELTA T Dryer Control System Improves Product and Saves Energy

Conventional industrial dryers rely on an "after-the-fact" feedback control system that measures product moisture content at the dryer exit. The DELTA T control system developed by Drying Technology, Inc. with assistance from the Department of Energy's Inventions and Innovation Program, is a more precise system to control variation in exiting product moisture content. The DELTA T system significantly improves control capability because it measures moisture content continuously before the throughput exits the dryer. It is the only control system with this capability.

The DELTA T unit uses two temperature sensors and an algorithm that relates product moisture content to two factors, the temperature drop of hot air after contact with the product and the production or feed rate. With this algorithm, it is possible to monitor and thus control product moisture before it exits the dryer, a distinct advantage over feedback-type controls. The control narrows the range of moisture between the driest and wettest product exiting the dryer by 33% to 50%. This range allows the average moisture content to be 0.5% to 4% higher. By lowering the variation in moisture content, average moisture content can be higher. This raises production 5% to 35%. Operating at a higher moisture content also lowers energy use by 10% to 20%. Additionally, reducing over- and under-drying improves the product quality.

Benefits

Emissions Reductions

Lower throughput product temperatures reduce the amount of volatile organic compound (VOC) emissions. Reduces emissions associated with fuel combustion by 10% to 20%.

Product Quality

Prevents overdrying and underdrying. Improves color, taste, and texture of food products.

Safety

Eliminates in-dryer fires in forest product drying operations.

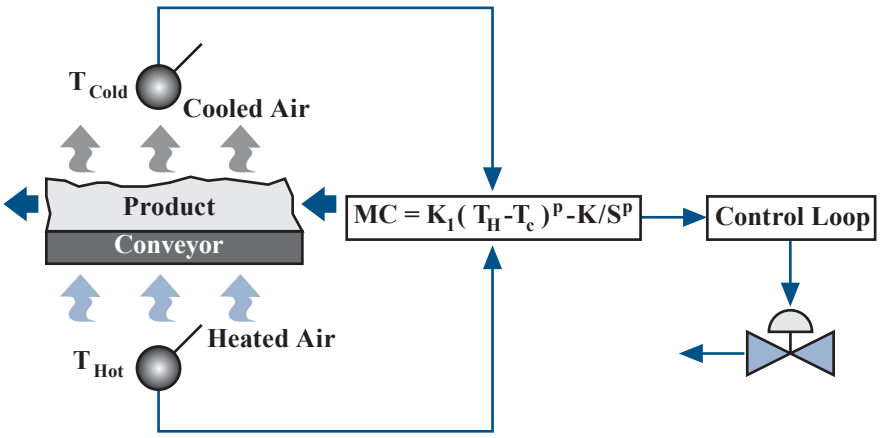

DELTA T Dryer Control System

Overview

- Developed by John W. Robinson of Drying Technology, Inc.
- Commercialized in 1986
- Over 300 systems operating in the United States, Canada and Columbia
- Installing 30 units/year as new industrial applications emerge

Energy Savings

(Trillion Btu)

Cumulative through 2003	2003
17.5	17.4

Emissions Reductions

(Thousand Tons, 2003)

Particulates	SO_X	NO_X	Carbon
0.0	0.0	2.04	276

Applications

Industrial dryer control for plywood, lumber, textiles, carpet, food, snack food, plastic pellets, mining, paper, corn wet milling, pet food, oriented stran board (OSB), tobacco, nonwovens, medium density fiberboard, ceiling tile, and chemicals.

Capabilities

Can control a variety of drying systems, including rotary, rotary louver, conveyor, flash, spray, fluidized-bed, and batch lumber kilns.

Contact: Drying Technology, Inc. - John Robinson - (409) 385-6422 - drying@moisturecontrols.com

Detection and Control of Deposition on Pendant Tubes in Kraft Chemical Recovery Boilers

Advanced Imaging System Improves Boiler Efficiency, Reduces Sootblowing Costs, and Improves Operational Safety

The kraft chemical recovery boilers used for pulp processing are large and expensive and can be the limiting factor for mill capacity. Improvements in boiler efficiency with better control of deposits on heat transfer surfaces (e.g. pendant tubes) and reductions in boiler downtime (due to pluggage or slag impact) can improve boiler capacity and reduce operating costs.

With assistance from DOE's Inventions and Innovation Program, Enertechnix, Inc., has developed a hand-held infrared inspection system. Using the inspection system technology, they have also established the feasibility of and are developing a continuous integrated monitoring sootblower control system to detect and control buildup of deposits. The early detection of deposits can extend the intervals between boiler shutdowns. The resulting improved boiler operation and reduced maintenance provide energy savings and productivity improvements to the pulp processing industry.

The hand-held inspection system has demonstrated reductions in sootblower steam use of up to 20%. This steam improvement is achieved because the frequency of sootblower operation is reduced, sootblowers can be repositioned based on data obtained from the inspection, and sootblower malfunction can be detected. Reduced pluggage and deposition in the boiler have also led to improved heat transfer rates. The integrated observation camera and sootblower control system (under development) are expected to reduce sootblower steam usage by 30-35% and improve heat transfer efficiency by 20%.

Benefits

Productivity

The hand-held inspection system reduces boiler downtime through early detection of defective fixtures (tube leaks or damaged sootblower). Without shutting down the boiler, the system also detects slag formation at an early stage, preventing impact damage and enabling cleaning before deposits harden.

Safety

The impact of sizable slag deposits on boiler internals can lead to severe damage and potential injury. The hand-held inspection system has enabled early detection and elimination of such deposits.

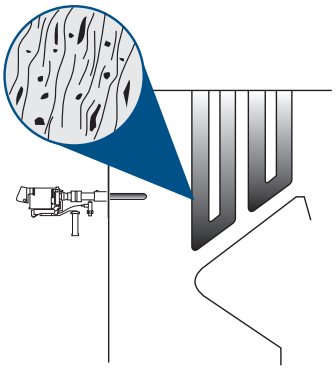

Hand-held Inspection System on a Kraft Recovery Boiler

Overview

- Developed by Enertechnix, Inc.
- Commercialized a hand-held device in 2002
- 8 units in use in 2003

Energy Savings

(Trillion Btu)

Cumulative through 2003	2003
0.176	0.132

Emissions Reductions

(Thousand Tons, 2003)

Particulates	SO_X	NO_X	Carbon
0.001	0.077	0.020	2.87

Applications

Kraft recovery boilers in the pulp and paper industry and in the coal, cement, steel, and glass manufacturing industries

Capabilities

- Produces clear images and videos of boiler interiors despite highly particle-laden environments.
- Produces images at distances up to 100 feet, enabling inspection anywhere in the combustion chamber including the convection pass and economizer.

Lignin-Derived Resins Recovered from Mill Process Waste Find 20 New Uses with More on the Way

Inventor Ken Kurple received a grant from the Department of Energy's Inventions and Innovation Program to perfect a patent for extracting lignin from black liquor (paper mill waste) by lowering the pH (alkalinity) of the black liquor and making the lignin insoluble. After filtering out the lignin, the process removes impurities and adds special ingredients to create a manufacturing resin from what had been unrecoverable waste. Before lignin recovery was perfected, industry was incinerating approximately 16 million tons of black liquor annually. A replacement product for petroleum, the new resin is now used in products such as a traction-enhancing tire spray, foams, adhesives, and foundry resins.

A primary industrial application for Lenox Polymers is the production of foundry castings for automotive transmission housings, steam pipe fittings, air motor castings, and governor housings. Recently, Lenox signed a marketing, development, and supply agreement with PPG Industries to develop specific lignin products for the automotive market.

Benefits

Employee Health

Products produced with this technology have important environmental advantages that can reduce employee exposure to formaldehyde in some applications.

Product Quality

Proven success in producing foundry castings and as a product-enhancing material in a variety of adhesives, plastic, and automotive products.

Profitability

By substituting a renewable, environmentally friendly resource for petroleum-derived resins, this technology saves petroleum for higher-value uses. Produces a lower-cost manufacturing resin with improved performance.

Waste Reduction

Lignin extraction lowers disposal costs for pulp mills and reduces the amount of black liquor burned, cutting air emissions and lowering costs to comply with environmental laws and air emission ceilings.

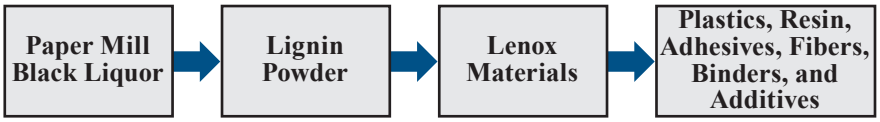

Lignin Separation and Epoxide-Lignin Manufacturing

Overview

- Lenox Polymers has established licensing or partnership agreements with companies in Germany, Japan, and the United States since 1994
- Lignin-derived resins received a Michigan Technology Award
- A unit in Port Huron, Michigan has been modifying lignin for commercial use since 1992

Applications

- Resource recovery in pulp and paper industry
- Resins for the automotive, foundry, plastics, construction, military, furniture, marine, and agricultural industries

Capabilities

- Able to treat black liquor from pulp mills to extract lignin, which is filtered and modified to create manufacturing resins that substitute for urea-formaldehyde, polyester phenolic, and polyurethane resins.
- Resins can withstand high temperatures and are flame resistant and formaldehyde-free.

New Technology Saves Trees, Increases Product Value, and Lowers Production Costs

With assistance from DOE's Inventions and Innovation Program, Dieter Bryce, Inc. has developed a machine, the Cradle Debarker™, that is designed to remove bark from delimbed tree stems. The stems are loaded into a long trough that contains a series of horizontal and vertical conveyor chains that move and raise the stems so they can be dropped back onto the stems remaining in the pile. The conveyor chains are oriented at a slight angle to the path of the logs so the logs move along the trough. The bark is loosened and removed due to the compressive and shear forces that result from the impact of the stems. Abrasion from moving the logs into position to drop onto the pile also contributes to the bark removal. Once the logs are debarked, they can be used for veneer, can be sawed into boards, or can be made into pulp chips. Unlike drum debarkers, which use a covered cylinder, the open top of this debarker lets the operator remove stems that have completed the debarking process and recycle others that require further processing. By opening the top of the debarker, more of the tree being debarked can be used, which saves trees.

Benefits

Productivity

Increases process efficiency by giving debarking operator greater process control.

Profitability

Inflicts less damage on logs during the debarking process. Each mill saves $30 per ton of wood or $450,000 per year in log purchases and $960,000 in energy purchases.

Waste Reduction

Saves trees by allowing a greater portion of the tree to be used.

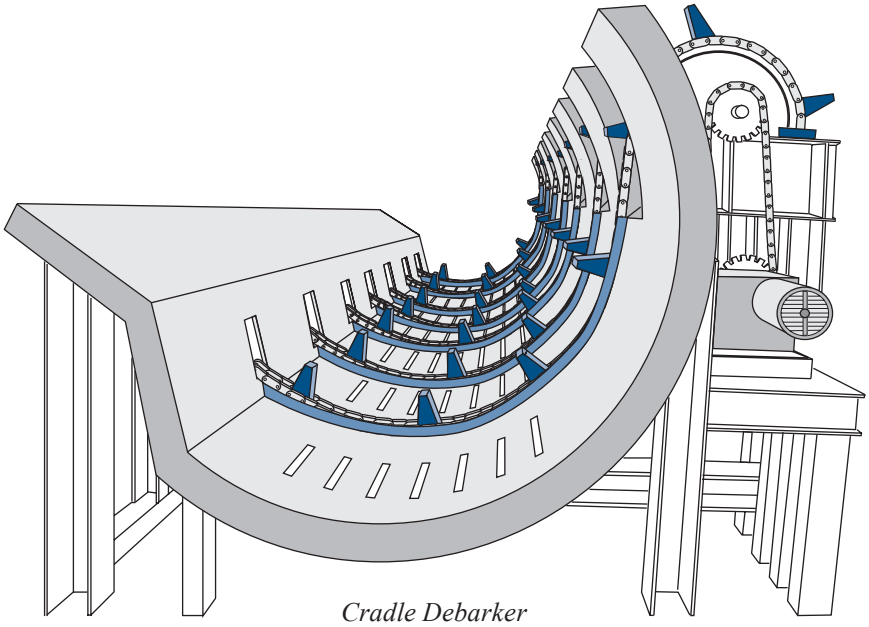

Cradle Debarker

Overview

- Developed by Dieter Bryce, Inc.
- Commercialized in 1996
- 4 units sold in the United States and 2 in Australia
- 2 units operating in 2003 in the United States

Energy Savings

(Trillion Btu)

Cumulative through 2003	2003
0.132	0.012

Emissions Reductions

(Thousand Tons, 2003)

Particulates	SO_X	NO_X	Carbon
0.0	0.006	0.002	0.260

Applications

Developed for the forest products industry where almost 5,000 debarking units are used in the United States

Capabilities

Debarking logs with the Cradle Debarker will:

- Strip off less wood when removing bark and reduce waste to 5,000 tons compared to 20,000 tons using older methods.
- Increase the economic value of the wood.
- Allow for greater operator control.
- Improve product quality.

Thermodyne Evaporator–A Substantially Improved Molded Pulp Products Dryer

With assistance from DOE's Inventions and Innovation Program, Merrill Air Engineers demonstrated that its Thermodyne dryer outperforms conventional molded pulp dryers. Unlike other dryers, the Thermodyne dryer reheats water vapor released from the product being dried to create superheated steam that is directed onto the material being dried. Conventional paper dryers exhaust this liberated water outdoors, causing a large visible plume and dumping valuable heat. The Thermodyne dryer is sealed so internal vapor (moisture) cannot escape into the insulated dryer walls. The retained water vapor passes through indirect integral heaters to raise its temperature to a level that allows for substantially faster drying rates than if drying in relatively dry air. An absence of oxygen in the dryer also means the drying temperature can be higher and the retained water vapor can help protect and evenly dry the material. The released water vapor also helps control internal temperatures by mixing with the superheated steam, dropping its temperature to a more desirable level. Finally, the system recovers heat and harmful volatile organic compounds (VOCs) from the dryer's condensate, substantially reducing the amount released into the atmosphere.

Benefits

Energy Savings and Emissions Reductions

Substantially reduces energy requirements by eliminating the thermal energy needed to make up air exhausted from conventional dryers. Uses up to 50% less energy than a conventional dryer with the potential of saving up to 5 million Btu/ton of pulp. Captures volatile organic carbon (VOC) emissions by containing condensable gases.

Productivity

Process promotes easier stacking and wrapping.

Product Quality

The superheated steam-drying environment suppresses oxygen, reducing the chance of scorching or burning the product under higher and faster drying temperatures. Other quality enhancements include less warping, reduced case hardening, and no discoloration.

Profitability

Process promotes lower shipping costs and lowers product losses.

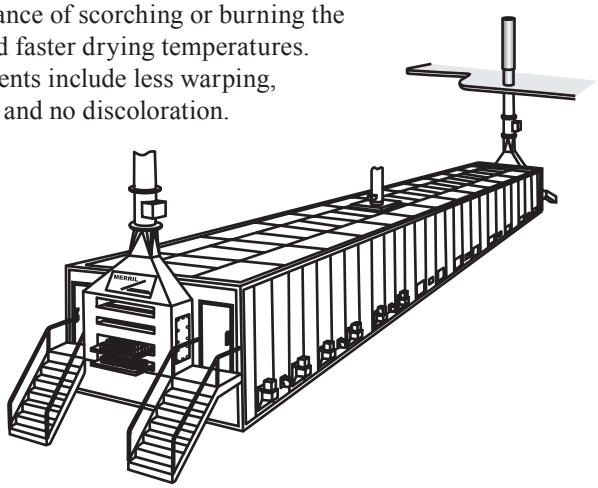

Thermodyne Evaporator–A Molded Pulp Products Dryer

Overview

- Developed by Merrill Air Engineers
- Commercialized in 1997
- 1 unit operating in Yakima, WA and 1 in Ireland

Applications

Forest products industry for manufacturing molded fiber articles and for drying pulp, wood, cotton, cellulose, or torrefied wood and wood veneers

Capabilities

- Fully capable of replacing conventional drying systems in the forest products industry.
- Handles a wide variety of forest products and can be applied to agricultural applications.

Contact: Merrill Air Engineers - Donald P. Curry, P.E. - (207) 767-1223 - curry.don@verizon.net

New Ceramic Composite Materials to Produce Superior, Low Cost Dies

Metalcasting, a major U.S. industry, has long been hampered by the high cost and short life of casting dies. Steel dies often fail prematurely due to metal fatigue cracking, corrosion, erosion, oxidation, heat checking, and soldering when the dies are exposed to molten metals while operating under cyclic-mechanical and thermal loading.

For some applications, coatings are applied to protect the die from the damage inflicted by molten metals. However, these coatings can fail prematurely and tend to interfere with the welding and polishing operations needed during reworking and correcting damages in the die.

With assistance from DOE's Inventions and Innovation Program, the Materials and Electrochemical Research Corporation has developed ceramic composite materials as an alternative to conventional material used in forming casting dies. Ceramic composites can deliver proven stability to molten metals and are resistant to corrosion, erosion, oxidation, thermal fatigue, and cracking. In addition, lower-cost hybrid composites in the nitride/nitridecarbide family have the potential to last up to 10 times longer than coated steel dies with significantly lower weight. These new composites are expected to reduce the cost of many products fabricated in the United States and create stronger competitiveness in the domestic metalcasting industry.

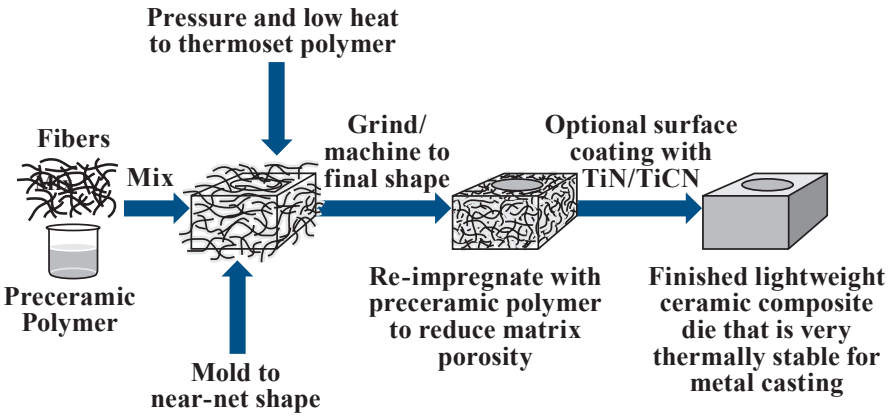

Ceramic Composite Die Forming Process

Overview

- Invented by the Materials and Electrochemical Research Corporation
- Commercialized in 2002
- Installed in several U.S. locations

Applications

Dies for metal casting, including replacement dies that are currently tool steel

Capabilities

- Offers resistance to corrosion, erosion, oxidation, thermal fatigue, and cracking.
- Provides stability when exposed to molten metals.
- 2 to 5 times harder than tool steels, resulting in 5 to 10 times longer useful die life.

Benefits

Productivity

The composite dies weigh approximately one-third less than traditional tool steel dies. The weight reduction saves time in production by eliminating some of the mechanical moving equipment.

Waste Reduction

The longer life of ceramic dies reduces the amount of waste produced by failed tool steel casting dies. The ceramic dies also produce fewer casting rejections, reducing the energy needed to recycle the rejected castings.

Laminated Object Manufacturing® Speeds Product Development and Cuts Prototyping Costs

Producing prototypes, models, or molds to create new products has always been a barrier for manufacturers. High-cost artisans painstakingly and slowly handcraft new prototypes with expensive metals. With assistance from the Department of Energy's Inventions and Innovation Program, Michael Feygin developed the Laminated Object Manufacturing® (LOM™) machine. The LOM machine works with computer design software to produce physicalobjects. Using high-quality paper, plastic, or a composite, the LOM machines can produce small, intricate, thin-wall models and masters; complex, thick-wall casting patterns; and solid cores, forming tools and cavity molds.

The system's software slices the geometry along the vertical axis into many layers. A rechargeable laser cuts cross-sectional layers in an outline of the material's top layer with crosshatched excess material. Once all layers have been laminated and cut, excess material is removed to expose the finished part.

Benefits

Energy Savings

Direct energy savings accrue from reduced electrical demand to run the LOM, which uses a laser to cut paper versus a computer numerically controlled (CNC) machine that mills a metal model.

Waste Reduction

Eliminates scrap from machined metal prototypes necessitated by redesigns of preproduction models. Uses low-cost sheet paper instead of limited shelf life, high-cost photopolymer.

Productivity

Reduces unnecessary machining time and saves associated labor. LOM works in hours or days versus a CNC that takes days or weeks.

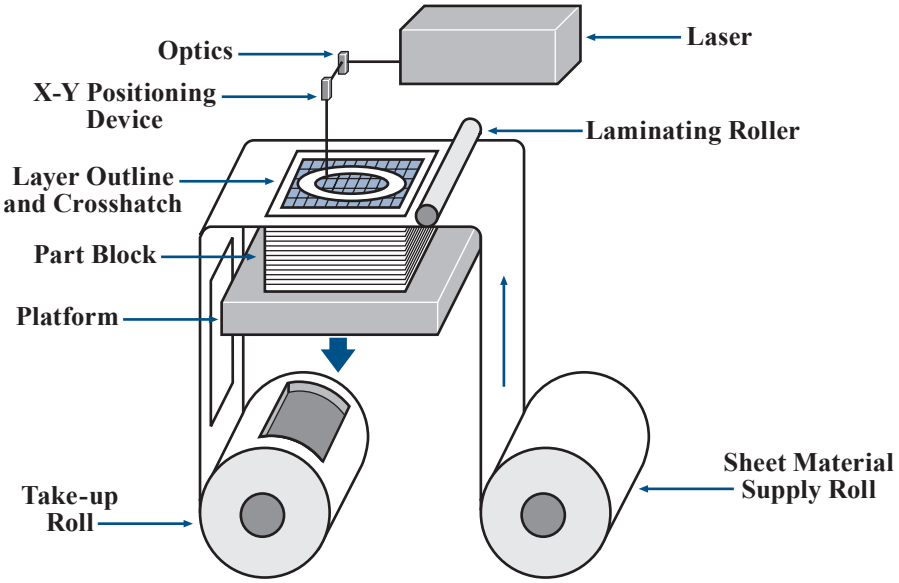

Laser-Based Laminated Object Manufacturing

Overview

- Commercialized in 1991 by Helisys Inc. (formerly Hydronetics)
- Over 170 installations worldwide

Applications

- Designing and manufacturing industrial and consumer products
- Patterns and molds for the foundry and investment casting industries
- Manufacturing heavy equipment for mining and agricultural industries

Capabilities

- Has large part envelope that can accommodate multiple smaller parts.
- Fabricates models from low-cost paper instead of photopolymer or metal.
- Reduces fabrication time from weeks to days.
- Can operate unattended overnight.
- Reduces expensive machine shop labor.
- Allows complete flexibility in prototype redesign and perfectly cuts intricate internal geometry the first time.

Contact: Cubic Technologies, Inc - Michael Feygin - (310) 965-0129

Meta-Lax Stress Relief Method Eliminates Pollution and Reduces Fuel Consumption

Operations such as machining and casting can introduce stresses that degrade product performance. Stress relief by heat treatment prevents distortion and crack propagation. Heat-treating requirements contribute to higher production and energy costs.

With help from the Department of Energy's Inventions and Innovation Program, Bonal Technologies, Inc. developed the Meta-Lax process that applies subresonant vibrational energy to relieve stress in metal objects. The process is particularly effective with welded structures and can be applied during or after welding. Meta-Lax equipment is portable and yields results much faster than conventional, unmovable heat-treating furnaces (30-minute average compared with 6 hours for a furnace).

Benefits

Energy Savings
Vibrational stress relief reduces energy consumption by 98% compared with a natural-gas-fired heat-treating furnace.

Material Savings
Raw material is saved though increased fatigue life (5% to 300%) and reduced scrap rate (50% to 100%).

Pollution Control
Pollution-free operation.

Productivity
Requires 98% less time for stress relief. Reduces processing costs 95%. Fabrication time reduced 25%, milling time reduced 40%, grinding time reduced 50%.

Product Quality
Work-piece performance is comparable or better than parts that are stress relieved thermally. The process causes no degradation of mechanical properties, distortion, or scaling. With welding, finer, uniform grain structures are generated, giving higher ductility (up to 400%) and impact strength (up to 100%). Weld cracking is reduced by 95%; also, weld distortion and porosity are lowered. The need for postweld stress relief is eliminated.

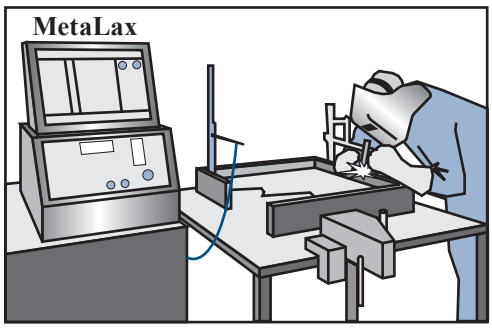

Meta-Lax Stress Relief Process

Overview

- Commercialized in 1991
- 841 units operating in United States

Energy Savings
(Trillion Btu)

Cumulative through 2003	2003
136	27.55

Emissions Reductions
(Thousand Tons, 2003)

Particulates	SO_X	NO_X	Carbon
0.0	0.0	3.22	438

Applications

- Metal fabrication and machining industries; applicable to castings, forgings, weldments, and metal plates
- Stress relief of parts used in several industries such as automotive, aerospace, mining, defense, paper production, and shipbuilding

Capabilities

- Uses mild subharmonic vibrational energy to relieve stress, a proven substitute for 80% to 90% heat treating metalworking applications.
- Treats a wider variety of work pieces with versatile, portable unit.

A Mechanical Stemming Device for Use in Explosive Loaded Blast Holes

Simple Device Maximizes Blasting Efficiency and Reduces Costs

In mining applications the removal of rock usually involves blasting. StemTite (now BF Carr and Associates), with the help of a grant from the Department of Energy's Inventions and Innovation Program, developed StemPlugs™ to meet the conflicting requirements of maximizing blast efficiency and minimizing costs.

StemPlugs are placed in the stemming zone of the blast hole, increasing the containment of the explosive gases in the blast hole. The resulting increase in explosive energy is transmitted to the rock mass and is used to fragment the rock rather than vent up the blast hole. In addition to maximizing blast efficiency and improving blasting safety, the device can extend the safe use of explosives into areas that would otherwise not allow blasting.

The StemPlugs are available in 12 graduated sizes ranging from 3" to $12^1/_4$" from 90¢ to $6.50. The resulting benefits far outweigh the cost of using the new plugs.

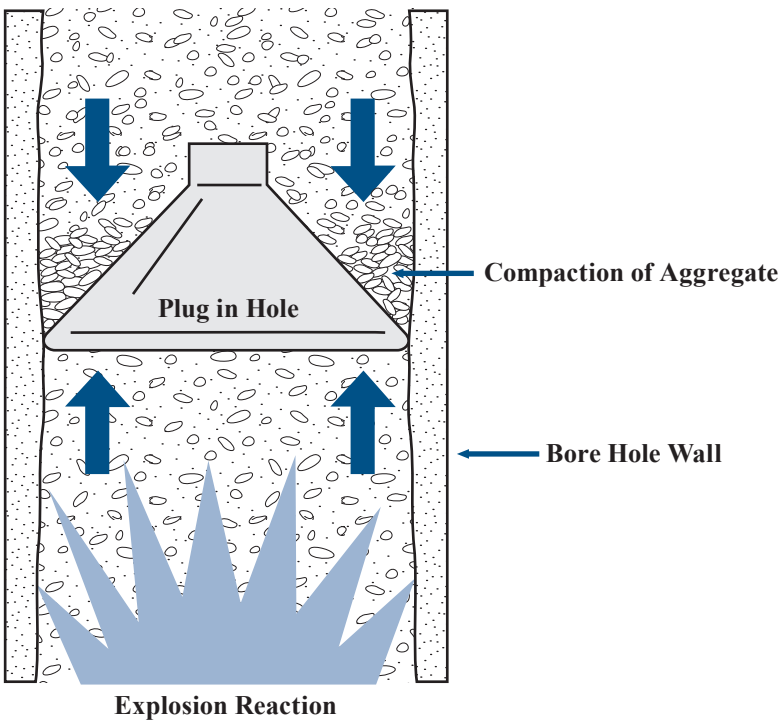

StemPlug in Use in a Bore Hole

Overview

- Developed by the University of Missouri-Rolla and StemTite, LLC
- Available from BF Carr & Associates
- Commercialized in 1991
- More than two and one half million plugs sold worldwide

Applications

Used in the construction, quarrying, and mining industries

Capabilities

- Offers blast plugs in a variety of sizes.
- Maximizes the efficiency of blasting, thus allowing less explosive to be used.
- Is easy to use in various situations.
- Reduces the amount of airborne pollutants by containing the blast energy in the hole.
- Allows for blasting closer to inhabited areas because less airborne dust is created.

Benefits

- Reduces explosive costs because blasting, is more effective.
- Reduces airborne pollutants.
- Increases worker safety and reduces noise levels.
- Reduces cost of secondary processing resulting from increased fragmentation.

Contact: BF Carr & Associates - Brian F. Carr - (314) 497-6075 - bfcarr@stemplug.com

Wireless Telemetry for Mine Monitoring and Emergency Communications

Replacing Communication Cables Improves Safety, Efficiency, and Cost of Mining

The hard-wired systems currently used in mining to transmit production data, environmental monitoring data, and voice signals to the surface are not reliable in emergency situations because of shifting debris or other hazards. To solve these critical problems, a wireless, through-the-earth telemetry system has been developed with the assistance of DOE's Inventions and Innovation Program. The system eliminates the need for wire connections between the surface and mining sites underground.

In addition to improving safety for underground workers, such a system would be more reliable, useful, cost effective, and flexible. For example, if the new system is combined with a separate in-mine system, workers could communicate freely with other underground personnel as well as surface personnel. By using the wireless transmitters, mining operations would not need to invest in communications cables and their installation and maintenance.

Reports from installations in U.S. mines indicate that the technology is a significant source of cost and maintenance savings.

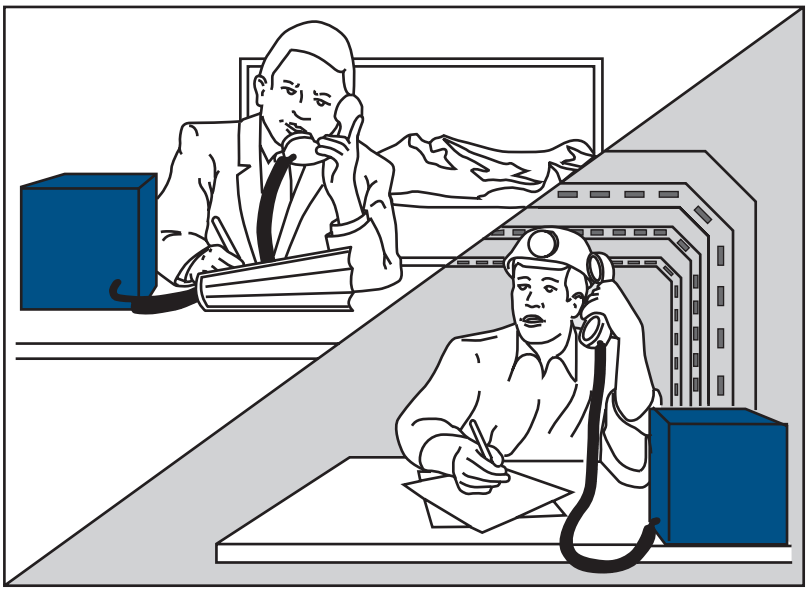

Wireless Telemetry Communication System

Overview

- Invented by Transtek, Inc.
- Commercialized in 1998
- Being used in several U.S. mines in 2003

Applications

- All mining situations and other underground work
- Steel-reinforced buildings, tunnels and transit systems

Capabilities

- Offers greater flexibility and mobility in communications.
- Allows for continued transmission of production data and environmental monitoring data.
- Increases communications capabilities both from the surface to the mining site and among personnel underground.

Benefits

Cost Savings

Costs are reduced by up to 25% by eliminating the need to purchase, install, and maintain communication cables. The new reliable system reduces unplanned downtime, thereby also saving costs.

Worker Safety and Health

The new system increases the safety and acceptability of coal mining as an energy source, thereby augmenting the energy supply. Safety in the mine is improved by the system's ability to provide uninterrupted communications.

Advanced Water Ammonia Absorption Cooling Finds Profitable Application in Refinery Operations

Refineries usually prefer ambient cooling with cooling towers for cooling refinery columns because refrigeration systems cost more initially, create headaches in operating and maintaining compressors, and significantly increase the demand for electricity. With assistance from ITP and a grant from the Inventions and Innovation Program, the Energy Concepts Company developed an advanced ammonia refrigeration unit powered by waste heat. It overcomes the disadvantages of a refrigeration system by recovering fuel from a reformer wastegate and raising the column capacity of a cracker. The unit debottlenecks the compressors in a cracker that operate with the wet-gas process. Their inlet vapors are cooled, and their salable liquid products are condensed out from the fuel or flare-gas stream.

A commercial unit operating in Commerce City, Colorado, is providing 265 tons of capacity to refrigerate gas/treat gas streams and is recovering a net 45,000 barrels/year of gasoline and LPG. The 290°F waste heat content of the reformer reactor effluent powers the unit. The absorption cooling system is directly integrated into the refinery processes and uses enhanced, highly compact heat and mass transfer components. The refinery's investment was paid back in less than 2 years as a result of increased recovery of salable product from fuel. It is important to note that an increase in fuel prices can lower this system's payback considerably.

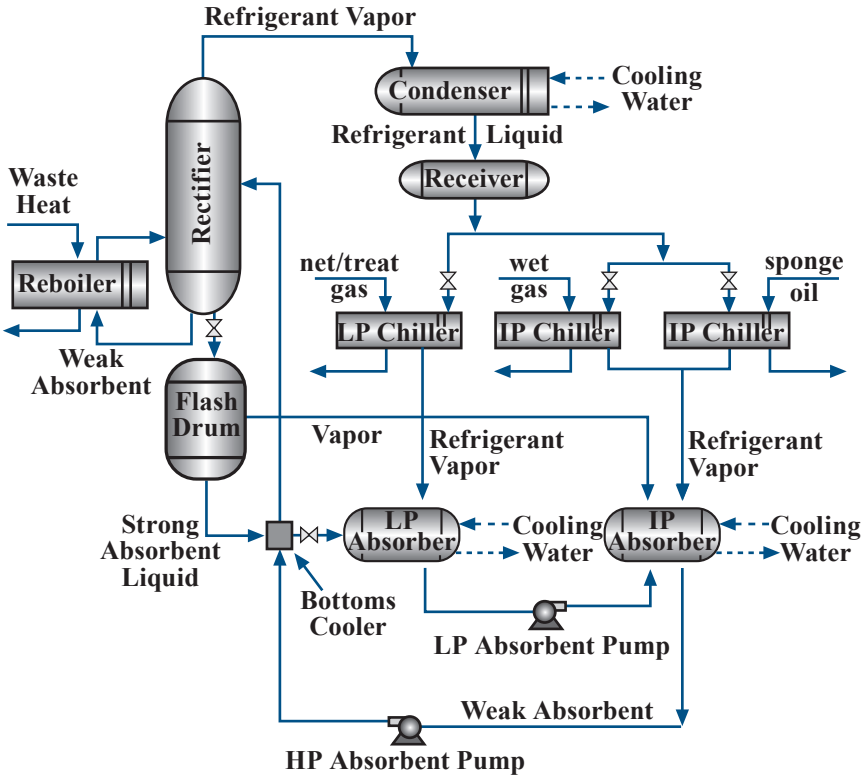

Absorption Heat Pump/Refrigeration Unit

Overview

- Developed by Energy Concepts Company
- One commercial unit installed at a refinery in 1997

Energy Savings

(Trillion Btu)

Cumulative through 2003	2003
1.93	0.306

Emissions Reductions

(Thousand Tons, 2003)

Particulates	SO_X	NO_X	Carbon
0.002	0.178	0.047	6.66

Applications

- Resource recovery in the petroleum refining and chemical industries
- Refrigeration and space conditioning for commercial and industrial facilities

Capabilities

- Water/ammonia absorption cycle can be powered from any heat source.
- Can deliver temperatures as low as -50°F.

Benefits

Profitability

Reduces energy intensity for a refinery and increases throughput for fluid catalytic crackers that have a bottleneck due to an overloaded wet-gas compressor. Applying refrigeration to refinery fuel gas header streams can recover millions of dollars worth of gasoline and liquefied petroleum gas (LPG) annually.

Contact: Energy Concepts Co. - Donald C. Erickson - (410) 266-6521 - enerconcep@aol.com

Improved Instrumentation Allows Gas and Oil Wells to Flow Again

Hydraulic fracturing and acidizing are the principal methods used to extend the apparent radius of a wellbore, thereby increasing oil flow. However, these methods can cause problems if the fractures extend more vertically than horizontally. The oil flow can even diminish if thief zones or fluid-sensitive formations are penetrated by these hydraulic treatments. An alternate approach to these conventional well stimulations is the dynamic method of gas injection, which circumvents the problems inherent with liquid treatments. In contrast with hydraulic facturing and acidizing, the Dynamic Gas Pulse Loading® (DGPL®) system generates high-pressure gasses, which induce and propagate multiple fractures in the target zone in very short time frames. With the aid of a grant from the Department of Energy's Inventions and Innovation Program, Servo-Dynamics, Inc., developed DGPL as a well stimulation technology that uses propellant gas generators to create and extend multiple fractures.

The DGPL system uses mechanical pressure gauges to monitor the fracture response of the formation. Time-dependent pressure recording provides a more detailed picture of the fracture process. The DGPL system is lowered into a well on an electric wireline or by a modified tubing conveyance. The DGPL process employs a downhole pressure sensor connected by wireline to a digital recorder system at the surface. This system provides instant access to the data and does not risk damage to the digital recorder.

The basic DGPL system has proven to be more cost effective than other stimulation methods. In addition, DGPL has unique capabilities for fracturing fluid sensitive and other difficult formations. The instrumentation provides additional information about the details of the fracture process that can be helpful when applying DGPL to a new type of formation.

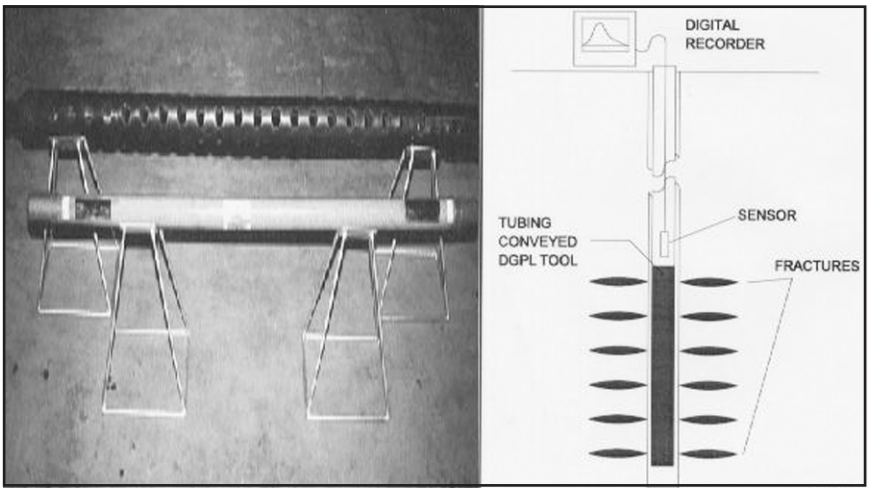

DGPL Equipment and Schematic

Overview

- Developed and marketed by Servo-Dynamics, Inc.
- Looking to license the product to a larger worldwide organization

Applications

- Preconditioning of wellbores for subsequent treatments
- Remedial treatments for improving injection profile and reducing injection pressure
- Secondary stimulation in wells that must be completed by hydraulic fracturing
- Primary stimulation in wells in highly porous and permeable conventional reservoirs damaged beyond perforating
- Horizontal and vertical wellbores

Capabilities

- Fractures fluid-sensitive formations and other difficult completions.
- Provides details of the fracture process that can be helpful for a new type of formation.

Benefits

- Produces multiple fractures radiating in all directions from the wellbore in short time frames.
- Costs less and is more effective than liquid treatments.
- Eliminates the need for heavy trucks, pumping equipment, or stored liquids on the surface.

Mercury-Free PVT Apparatus for Thermophysical Property Analysis of Hydrocarbon Reservoir Fluids

New Fluid Analysis System for Reservoir Fluids Allows Flexibility, Easy Service, and Minimum Maintenance

Thermophysical analysis of the pressure, volume, and temperature (PVT) of reservoir fluids is essential in determining the performance and recovery factors for a given reservoir, the design of surface production and handling facilities, and the design and monitoring of pipelines for remote production sites. The traditional method of PVT measurements involves the use of mercury. This method requires elaborate and time consuming calibrations and tedious cleaning procedures and maintenance and exposes the instrument operator to the health hazards associated with mercury. Additionally, the mercury-based system does not provide information on the true state of the system.

The mercury-free analytical system was developed by Ruska Instrument's Fluid Technology Group and tested with the aid of a grant from the Department of Energy's Inventions and Innovation Program. Chandler Engineering LLC acquired the Ruska Fluid Technology Group in 2001. Chandler Engineering is now a division of Ametek. The Mercury-Free Phase Behavior System is a completely operational research laboratory for studying thermophysical properties of reservoir fluids and many other complex chemical fluids. The system will provide analysis such as phase behavior of oil and gas-condensate, density, viscosity and solids detection. Each system is custom designed to meet a client's analytical requirements and may be supplied with a complex testing package including a large 400cc shaft-driven piston with a sapphire sight glass, quartz-tube gas and gas-condensate floating piston cell with internal viewing of sample, capillary or electromagnetic viscometer, densitometer, solids detection apparatus and a third floating piston cell for receipt of oil during ancillary tests.

The system is ready for operation with minimal installation. Its modular design provides several advantages, including improved accuracy and performance, the ability to upgrade or add components, and simplified maintenance. Central computer control of the system allows a single operator to perform experiments with safety and accuracy. Cost savings occur at the oil exploration and production level where fast and accurate data can increase the accuracy of reservoir potential, reduce the cost of the drilling program or highlight problems in fluid production.

The Mercury-Free Phase Behavior System

Overview

- Developed by Ruska Instrument Corporation
- Manufactured and sold by Chandler Engineering, a division of Ametek, Inc.
- Commercialized in 1990
- Over 50 systems sold worldwide

Applications

Analyzes hydrocarbon fluids and allows operation of the surface recovery units at a better pressure

Capabilities

Fluid phase behavior analysis of oil reservoirs, including pressure, volume, temperature (PVT), and viscosity.

Benefits

- Allows fast, easy operation with low maintenance.
- Provides excellant mixing of all phases.
- Allows snapshots or long run time pictures of phase behavior as it happens.
- Provides very accurate phase volume measurements.
- Provides many operator safety features.
- Avoids worker exposure to mercury and environmental contamination due to mercury spills.

Contact: Chandler Engineering, LLC - John Savickas - (570) 675-4089 - jsavickas@chandlereng.com

Advanced Technology Removes Water from Gas Wells to Increase Production

Hydrostatic pressure of the water in a gas well can completely plug the well and stop gas production. To keep the well functional, the water must be removed to allow gas production to resume. There are a number of ways to eliminate water in the well, but most methods come with disadvantages such as high cost or greater energy requirements. One way the water can be removed is by using surfactants that rely on residual gas pressure and migration to produce agitation and foam to lift water out of the well.

Maverick Petroleum, with the help of a grant from the Department of Energy's Inventions and Innovation Program, developed a new self-agitating soap stick to revive non-producing and marginally producing gas wells. The process involves a blend of surfactants and gas producing chemicals that produces the self-agitating necessary to transform the static column of fluid into a column of foam without needing any assistance from the well itself. It allows the existing bottom hole pressure to restart flow from the well.

The new self-agitating soap stick offers the potential for substanted energy savings by retrieving gas that would be lost when wells are plugged and abandoned. The new treatment is less expensive than other options, such as swabbing, and has been demonstrated to be equally sucessful.

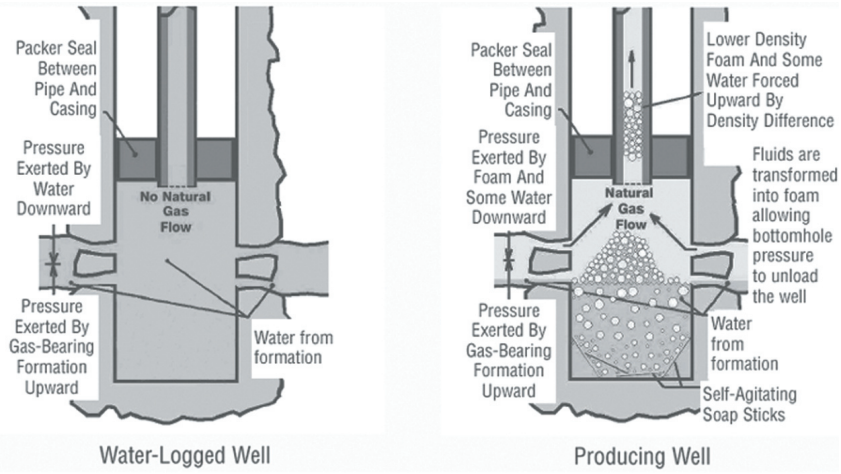

Self-Agitating Soap Sticks in Use in a Gas Well

Overview

- Developed and tested by Maverick Petroleum Corporation
- Available through gas well acquisitions and joint ventures.

Applications

Restoration of gas well production

Capabilities

- Avoids the need to swab or pump water to maintain well production.
- Can easily be used on site.
- Treats wells with water influx rates of less than 5 barrels per day.

Benefits

- Permits an operator's on-site personnel to treat wells.
- Successfully restored gas production in more than 90% of suitable wells treated.

Bio-Competitive Exclusion Process Produces More Oil and Reduces Corrosion

Traditional methods of recovering tertiary oil are effective but costly for widespread use in the oil industry. The LATA Group, a division of Geo-Microbial Technologies, Inc., with the aid of a grant from the Department of Energy's Inventions and Innovation Program, has developed and commercialized a new process to reduce hydrogen sulfide and increase oil recovery. The new Bio-Competitive Exclusion (BCX) process works by setting off a chain of events that benefit oil and gas well operations.

The BCX process is initiated and perpetuated by a product called Max-Well 2000 in which inorganic nutrients are custom designed to stimulate and harness the power of targeted beneficial microorganisms that live in virtually every oil and gas reservoir. These bacteria grow rapidly, out competing harmful sulfate-reducing bacteria (SRB) for basic carbon nutrients. The SRB are inhibited from producing new hydrogen sulfide and iron sulfide. Existing sulfides are removed by inorganic reactions and bacterial degradation, both a result of Max-Well treatments. The rapid growth of the beneficial bacteria also produces solvents, surfactants, carbon dioxide, and nitrogen, all of which act to mobilize trapped oil within the reservoir.

The result is increased revenue, improved quality and higher-value oil, reduced costs from corrosion, and safer working conditions. Periodic applications of low-cost Max-Well products enable oil producers to recover the enormous residual oil resource more economically than with other methods.

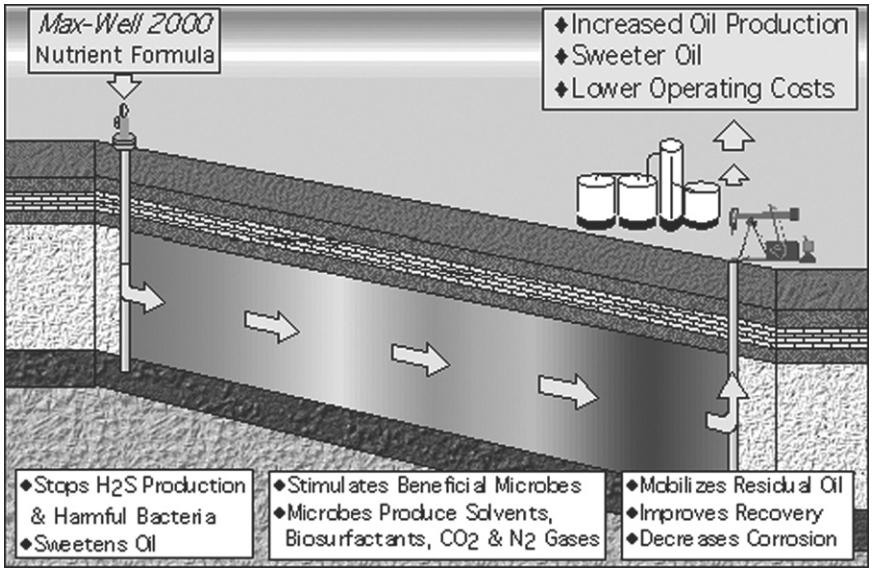

BCX Process

Overview

- Developed and marketed by the LATA Group, a division of Geo-Microbial Technologies, Inc.
- Commercialized in 1997
- Growing sales volume despite historical market resistance to biological technologies

Applications

The petroleum industry for both oil and gas wells as an alternative to costly traditional methods of tertiary oil recovery

Capabilities

- Increases oil recovery in secondary and tertiary oil recovery operations.
- Reduces sulfides in reservoir wells, pipelines, produced water facilities, and gas storage.

Benefits

Energy and Environmental Savings

Significantly increases oil production at a reduced cost and prevents the production of poisonous and corrosive hydrogen sulfide in oil and gas production systems.

Productivity/Waste Reduction

Mobilizes residual oil and improves secondary and tertiary recovery to minimize the amount of oil rendered unavailable by traditional methods.

Profitability

Enables oil producers to recover the enormous residual oil resource missed by standard production methods.

Worker Safety and Health

Prevents the production of poisonous and corrosive hydrogen sulfide in oil and gas systems, creating safer working conditions.

Contact: The LATA Group, Inc. - Mike Dennis - (918) 535-2147 - mike@latagroup.com

Reciprocating Rod Pump Seal Assembly

New Technology Controls Leakage at the Wellhead to Prevent Pollution and Increase Production

Environmental contamination is a primary concern for oil and gas producers. Spills and leaks of produced well fluids can contaminate soil, resulting in costly cleanup. In addition, the leaked oil or gas is lost production. If these conditions persist undetected, the economics of the well are severely impacted. Leaks or spills are often the result of stuffing box seal wear, worn packing, or rod friction.

The Palmour Group, with the aid of a grant from the Department of Energy's Inventions and Innovation Program, developed the Hydro-Balanced Stuffing Box seal system to solve the problems associated with spills and leaks around the polished rod in oil and gas pumping well installations. Barrier Fluid Technologies has been licensed by the Palmour Group to continue the development and marketing of this system. The hydro-balanced concept isolates the well fluid from the primary seal with the placement of a secondary seal This chamber is then filled with a biodegradable fluid and pressurized to flow line pressure, thereby balancing the pressure across the secondary seal. When the primary seal wears sufficiently to leak, only the biodegradable fluid can reach the atmosphere.

The new seal system provides lubrication to the pumping rod, allowing lower temperature operation, extending the life of the packing elements, and reducing the energy demand for the pump motor. The system is available for use with reciprocating sucker rod pumping systems. The Hydro-Balanced Stuffing Box can be installed on new wells or retrofit to existing wells.

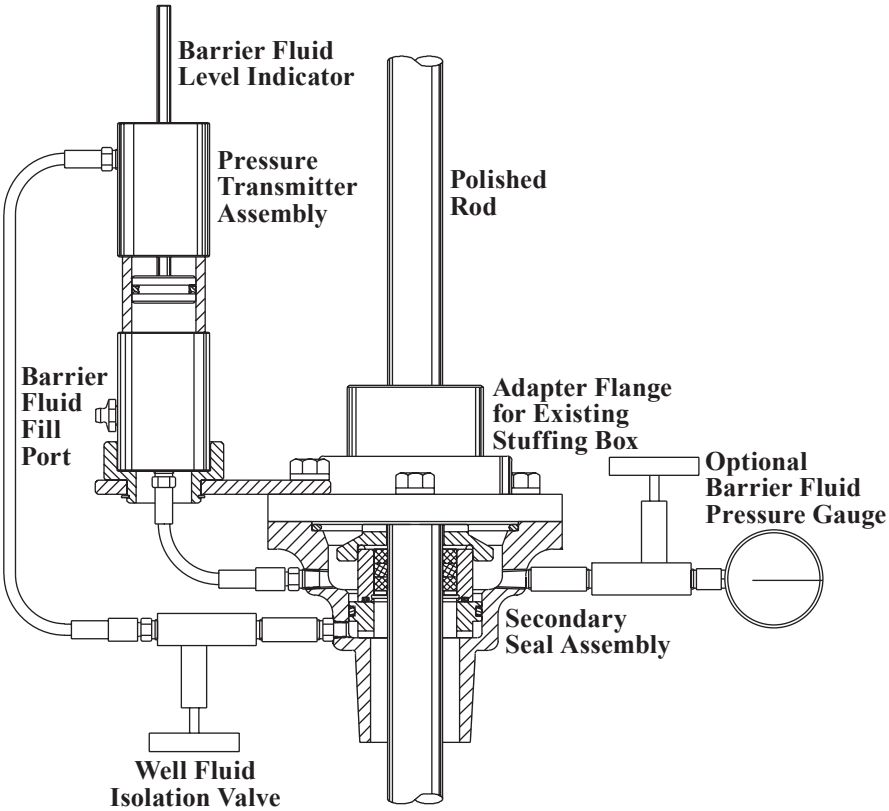

Hydro-Balanced Stuffing Box

Overview

- Developed by the Palmour Group
- A more economical and retrofit friendly design has been developed by Barrier Fluid Technologies
- Multiple units installed and operating
- Commercialized in 1998

Applications

Rod pumped wells

Capabilities

- Eliminates loss of well fluids from leaking rod pump seals.
- Operates at lower temperature and reduces friction between the rod and packing.
- Available for new wells or can be retrofit to existing wells.

Benefits

- Eliminates loss of well fluids from leaking rod pump seals, thereby controlling pollution at the wellhead.
- Prevents loss of production from leakage.
- Reduces energy costs by operating at lower temperatures and decreasing friction between the rod and packing.
- Reduces maintenance costs by extending the service life of the packing and polished rod.
- Eliminates the potential cost of environmental cleanup from leaks and spills.

New Check Valve Increases Productivity in Oil Well Operations

A new check valve has been designed and tested that can be used in two modes. One mode is on a high-flow rate production well to allow the well to be worked over to replace or repair electric submersible pumps. The second mode is on an injection well to allow enhanced reliability and remote operation. Sanford and Russell Associates, with the aid of a grant from the Department of Energy's Inventions and Innovation Program, designed and tested the Russell self-piloting check valve. After the device was successfully tested, it was licensed to Weatherford International, Inc., who has incorporated it into two valves.

The Formation Saver Valve (FSV) is installed below electric submersible pumps (ESPs) when the well must be periodically worked over to replace failed ESP pump sets. The main application of the FSV is to prevent fluid loss and associated formation damage when the ESPs are being worked on. As well as reducing the impact of fluid loss on well deliverability, the FSV significantly reduces the cleanup times when the well is returned to production. By providing an immediate and effective reservoir isolation barrier, the FSV also reduces the overall duration of workover operations.

The Self-piloting Injection Valve (SIV) is the reverse of the FSV. SIVs are used to inject fluids in low rate wells or to remediate after safety valve failures. The SIV overcomes the problems that traditional retrievable injection valves have with pressure loss through the valves and sensitivity to changes in injection flow rate. The SIV avoids the need to accurately anticipate injection rates and to change out the valves because the SIV is non-flow-rate dependent. The SIV is more reliable than traditional valves and requires no control line, thus reducing cost and wellhead complexity.

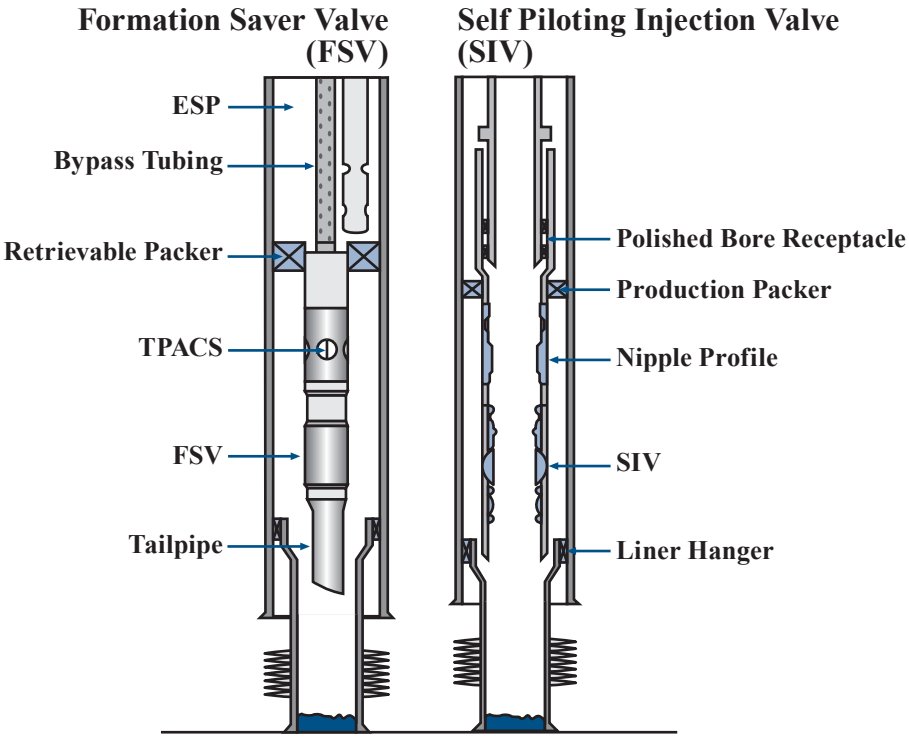

Weatherford Valves Using the Russell Self-Piloted System

Overview

- Developed by Sanford and Russell Associates and commercialized by Weatherford International Ltd.
- Commercialized in 1991
- Currently used in more than 100 wells

Applications

- High flow rate wells during workover
- Injection applications for enhanced reliability

Capabilities

Provide flow control technology to get oil wells on line more effectively and to maximize production.

Benefits

- Increases well production potential.
- Reduces workover complexity and duration.
- Increases pump operating days per year.
- Retrievable installation.

Contact: Weatherford Completion and Production Systems - Don Lauderdale - (713) 983-5204 - don.lauderdale@weatherford.com

V-PLUS™ Refrigerant Oil Cooling System

Refrigerant Oil Cooling System Cuts Energy Use 2% to 5%

With assistance from the Department of Energy's Inventions and Innovation Program, Vilter Manufacturing Corporation proved that adding its refrigerant pump system, the Vilter-Pumped Liquid Unitary System (V-PLUS) System, to screw compressors for industrial refrigeration and cooling systems increases system capacity, extends system lifetime, and saves energy. Vilter's single-screw compressor is a rotary, oil-injected, positive-displacement machine that can operate with commonly used industrial refrigerants. It consists of a cylindrical main screw with six helical grooves and two planar gaterotors. The gaterotors engage with the main screw to form the compressor chamber. Vilter also offers dual-screw compressor system packages with this technology. Further, the V-PLUS system can be added to other types of compressor-driven refrigeration systems.

The invention saves energy and increases screw compressor life by injecting refrigerant liquid into the outlet stream of the compressor to cool the lubricant oil. In addition to cutting the horsepower needed for the compressor, the oil cooling increases compressor longevity because no capacity is sacrificed unlike compressor refrigerant injection systems, this system is cheaper to install than "after cooler" external water-cooling systems and is less costly to operate.

Benefits

Energy Savings

V-PLUS™-equipped systems reduce the horsepower requirement by 2% to 5%, depending on configuration and operating characteristics, and reduces electricity use by 2% to 5% for refrigeration and cooling.

Productivity

Improves compressor operation and life. Raises compressor capacity compared with systems that inject refrigerant into the compressor.

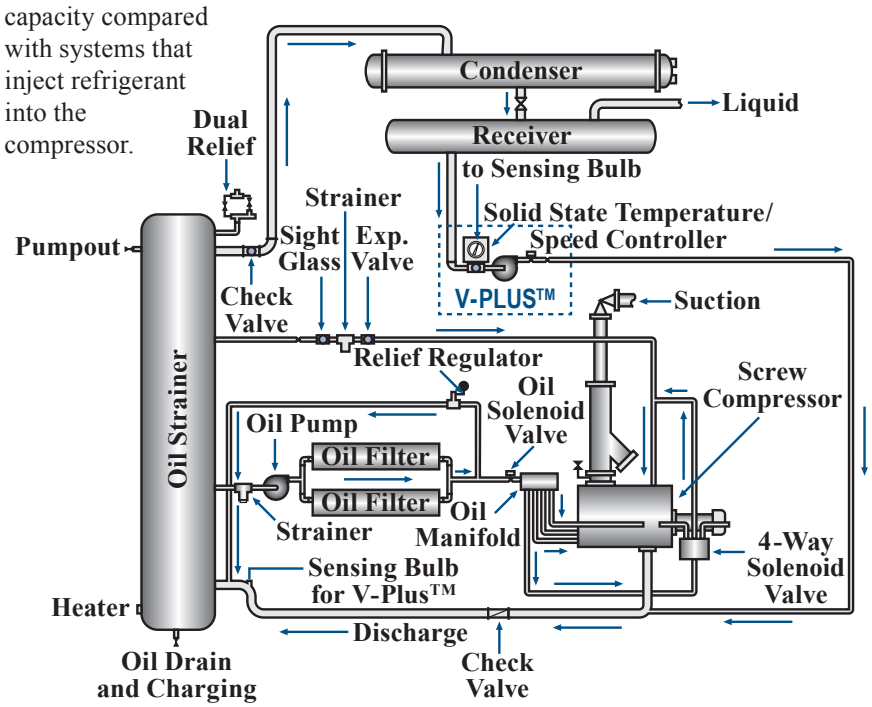

System with V-PLUS Oil Cooler

Overview

- Invented and patented by Vilter Manufacturing Corporation
- 250 units operating in the United States in 2003

Energy Savings

(Trillion Btu)

Cumulative through 2003	2003
1.00	0.090

Emissions Reductions

(Thousand Tons, 2003)

Particulates	SO_X	NO_X	Carbon
0.0	0.019	0.014	1.77

Applications

- Refrigeration systems for food processing and cold storage warehousing
- Climate control systems for industrial, commercial, and institutional buildings

Capabilities

- Can be retrofit to any medium to large compressor-driven refrigeration or cooling system to raise compressor capacity, cut duty cycle, and increase system efficiency.
- Available on Vilter compressors with displacements from 100 cubic feet minute to 1800 cubic feet/minute.

New Equipment Results in Increased Yield and Emissions Reductions

Coke is a vital component of the iron and steel production process. Coke is derived by heating coal inside coking ovens. Once the coal to coke conversion is complete inside of the coking ovens, a ram pushes the hot coke from the oven into an open quenching car. The quenching car of hot coke is moved by rail to the quench tower, where several thousand gallons of water are used to cool the coke. The push and quench process at coke oven facilities is a very large source of fugitive dust, volatile organic compound (VOC), and wastewater emissions.

The Kress Indirect Dry Cooling (KIDC) System, demonstrated using a grant from the Department of Energy's Inventions and Innovation Program, replaces the quenching car with a sealable coke box. A carrier positions the box flush against the coke oven where the box can receive the push. During the push, the box is sealed at the jamb, and when the push is completed, the KIDC's guillotine door closes and the box is automatically sealed. Following the push, the carrier moves the box to the quench station and onto a cooling rack. Cooling water runs over the box to cool the coke indirectly. The KIDC system includes a vehicle, a series of boxes (a single box will serve approximately six ovens), a cooling rack with space for each box, and a receiving station. The entire cycle is planned with minimal operator involvement required, thereby eliminating human error. A computer with manual override controls all functions and moves if required.

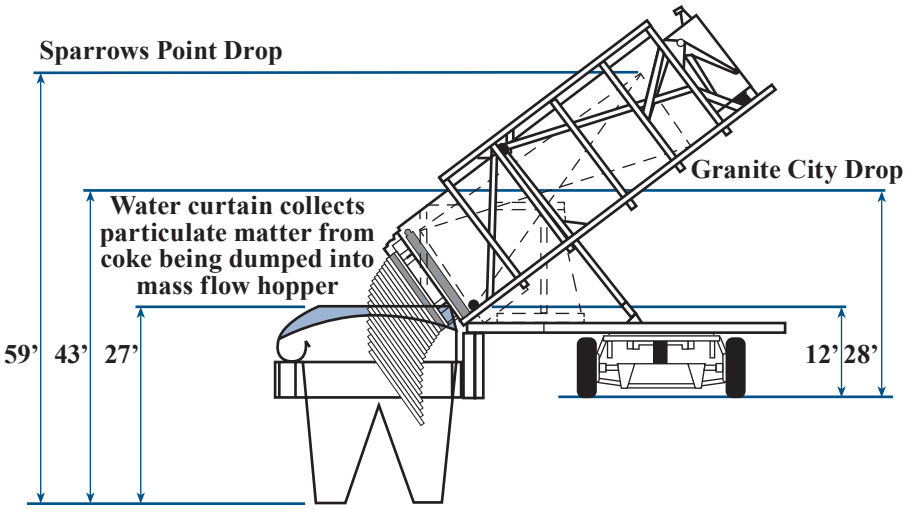

KIDC Carrier and Box Dumping Coke

Overview

- Developed by the Kress Corporation
- Demonstrated at 2 United States coke plants

Applications

Replaces the conventional push and quench process at steel mill coke-oven facilities

Capabilities

- Fugitive dust is nearly eliminated from the push and quench operations.
- VOCs emitted from the coke are controlled by a flare at the rear of the box.

Benefits

Energy Savings

Reduces energy requirements for emissions control and waste treatment equipment.

Environmental Benefits

Reduces emissions of particulates from the pushing operations by 75% while quenching emissions are virtually eliminated. There is minimal water quality impact, as the quenching water does not come in contact with the coke.

Productivity

Improves coke yield and quality because the coke is cooled slowly, does not become wet, and is not shocked by direct water quenching.

Contact: Kress Corporaton - Rita Kress - (309) 446-3395 - swalter@kresscarrier.com

Recovery of Acids and Metal Salts from Pickling Liquors

Acid and Salt Recovery Now Cost-Effective for Smaller Manufacturers

Steel fabrication processes often use pickling (immersing steel in acid) to remove oxide layers from recently heated steel. Technology for recycling the sulfuric acid has been available for large installations for some time. The Green Technology Group, in collaboration with DOE's Inventions and Innovation Program, developed the Pickliq® process to make sulfuric acid recovery cost-effective for smaller facilities.

The Pickliq process combines diffusion dialysis, energy transfer, and low-temperature crystallization technologies to efficiently recover acids and metal salts. It has demonstrated significant gains in production capacity, quality control, and productivity by maintaining pickling tank acid and iron concentrations at preset levels. Bath uniformity and predictable performance raises output and minimizes rejects and rework. To manufacturers, these benefits are even more important than the simple cost savings from eliminating waste. Additional benefits include reduced demand for virgin acids and elimination of chemicals to neutralize waste acid, as well as energy and cost savings associated with acid transportation and disposal.

The Green Technology Group has recently improved the technology, and the new system called Pickliq Hydrochloric Acid Regeneration (PHAR®) will soon be commercially available.

Benefits

Productivity

Significantly improves process uniformity and product quality, reduces downtime associated with acid revitalization, improves overall process effectiveness and throughput, and reduces rework. Optimal pickling bath acid concentrations are continuously maintained.

Profitability

Costs less than transporting and disposing of waste acid. Eliminates long-term liabilities of waste disposal. Generates a saleable by-product (metal salts) that can be used in a variety of applications. Results in rapid payback estimated at 6 months to 2 years.

Waste Reduction

Recycles acid for reuse, eliminating disposal of spent acid and neutralized sludge. Reduces the demand for virgin acids, conserving petroleum feedstock.

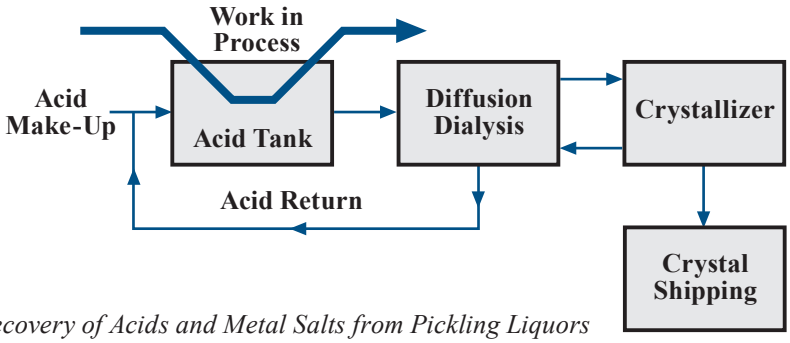

Recovery of Acids and Metal Salts from Pickling Liquors

Overview

- Developed by Green Technology Group
- First commercial unit installed in 1995
- 2 units operating in the United States

Energy Savings

(Trillion Btu)

Cumulative through 2003	2003
0.010	0.001

Emissions Reductions

(Thousand Tons, 2003)

Particulates	SO_X	NO_X	Carbon
0.0	0.0	0.0	0.026

Applications

To be used primarily in the primary metal industry but could be used in the metal finishing and circuit board industries for recovering acids and metal salts from etching and metal stripping

Capabilities

- Provides better process control and product quality.
- Maintains acid baths at optimum concentration.
- Permits continuous operation.
- Can recover hydrochloric, sulfuric, nitric, hydrofluoric, and other acids (including nonmineral acids).
- Recovers metal salts into a saleable by-product. Metals with recoverable salts include ferrous, nickel, copper, zinc, tin, manganese, and aluminum.

Emerging Technologies

Aluminum Technologies **86**

Improved Methods to Manufacture Carbon-Alumina Composite Anodes for Aluminum Reduction 86

Novel Technique for Increasing Corrosion Resistance of Aluminum and Aluminum Alloys 86

Chemical Technology **87**

Single Device Equivalent to CMOS 87

Crosscutting Technologies **88-91**

Fiber Sizing Sensor and Controller 88

High-Temperature Coating for Gas Turbine Components 88

High Temperature Refractory Ceramic 88

Hydrodyne Process for Tenderizing Meat 88

Insert Drill Having Three or More Flutes 89

Membrane Technology to Remove Entrapped Air from Ammonia Refrigeration Systems 89

Miniature, Inexpensive, Amperometric Oxygen Sensor 89

Nickel-Based Superalloy with Improved Weldability and Oxidation Resistance 89

Polymer-Dispersed Ferroelectric Smectic-C* Display Technology 90

Process Particle Counter 90

Radiation Barrier Heating Mantle for High-Temperature Furnaces 90

Self-Dressing Resistance Welding Electrode 90

The Road Patcher 91

Tough-Coated Hard Powders 91

Tribopolymerization as an Anti-Wear Mechanism 91

Wear Resistant Composite Structure of Vitreous Carbon Containing Convoluted Fibers 91

Forest Products Technologies **92**

Christian Veneer Dryer 92

Linear Corrugating 92

Emerging Technologies *(continued)*

Glass Technologies **93-94**

Enabling Tool for Innovative Glass Applications 93

Float Zone Silicon Sheet Growth 93

Frequency-Selective Solar Glazing System 93

High Throughput Vacuum Processing for Innovative Uses of Glass 93

Manufacturing Ceramic Products from Waste Glass 94

Metal Casting Technologies **95**

Lost Foam Casting Quantifier Program 95

Three-Dimensional Objects by Photosolidification 95

Titanium Matrix Composite Tooling Material for Aluminum Die Castings 95

Mining Technologies **96**

Lower-pH Copper Flotation Reagent System 96

Soft *(Unfired)* Ceramic Particles via Dynamic Cyclone Classification 96

Petroleum Technologies **97-98**

Composite-Reinforced Pipe 97

Distillation Column Flooding Predictor 97

Distributed Optical Fiber Sensors for Continuous Liquid Level Tank Gauging 97

Method for Cutting Steam Losses During Cyclic Steam Injection of Wells 97

Process for Conserving Steam Quality in Deep Steam Injection Wells 98

Pulsed Laser Imager for Detecting Hydrocarbon and VOC Emissions 98

Well Bottom Fluid Implosion System to Stimulate Existing Well Flow 98

Steel Technology **99**

Method of Making Steel Strapping and Strip 99

Improved Methods to Manufacture Carbon-Alumina Composite Anodes for Aluminum Reduction

An improved metallic anode for electrochemically reducing aluminum was developed with an Inventions and Innovation grant. The anode obviates the need for using carbon and makes it possible to operate the cell at a lower temperature. The process produces oxygen instead of carbon dioxide and perfluorocarbon emissions.

Contact: **Northwest Aluminum Technologies**
3313 West Second Street
The Dalles, OR 97058

Don Bradford
Telephone: 541-298-0861
Email: dbradford@gorge.net

Grant Originally Awarded to: **Electrochemical Technology Corporation**

Novel Technique for Increasing Corrosion Resistance of Aluminum and Aluminum Alloys

A new process imparts a corrosion-resistant coating to aluminum and aluminum alloys. The process uses nontoxic lithium and magnesium salts, with or without heat treatment, to replace the currently used hexavalent chromium, which is known to be a highly toxic carcinogen.

Contact: **Ohio State University**
Material Science Department
477 Watts Hall
2041 College Road
Columbus, OH 43210

Prof. Rudolph G. Buchheit
Telephone: 614-292-6085
Email: buchheit.8@osu.edu

Grant Originally Awarded to: **University of Virginia**

Single Device Equivalent to CMOS

A new process for producing an inverting single metal oxide semiconductor (MOS), which operates like a conventional complimentary metal oxide semiconductor (CMOS) requires fewer fabrication steps than in conventional processing. This leads to greater yields per batch and saves energy.

Contact: **James Welch**
10328 Pinehurst Avenue
Omaha, NE 68124

James Welch
Telephone: 402-391-4448

Fiber Sizing Sensor and Controller

Current measurements of fiber sizes during manufacturing are done offline via sampling and are time consuming and labor-intensive and are not very useful for process control. A new technology uses ensemble laser diffraction (ELD) to provide real-time measurements of fiber size distribution. This technology enables on-line measurements for process control and also significantly reduces the time and labor needed for off-line fiber size measurements. Use of this system will reduce the frequency of process shutdowns and in the event of a shutdown, will help minimize the associated energy and material loss. By providing a better control of the fiber size, this technology will also help reduce the amount of fibrous material used in the end products (e.g. building insulation, filter media and fiber reinforcements) without compromising the desired product specifications.

Contact: **Powerscope, Inc.**
1313 Fifth Street SE
Minneapolis, MN 55414

Amir A. Naqwi
Telephone: 612-331-4247
Email: powerscope@aol.com

High-Temperature Coating for Gas Turbine Components

A new high-temperature coating material for gas turbines has been developed as a replacement for existing coating materials. Coatings made from this new material provide superior cracking resistance and enhanced oxidation protection to the hot-section components of gas turbines and better adhesion for thermal barrier coatings, while reducing manufacturing cycle time and cost. In addition, the process for applying the new coating material is more environmentally friendly than some of the current techniques.

Contact: **Turbine Coatings, Inc.**
PO Box 600
Schenectady, NY 12301

Maggie Zhing
Telephone: 518-348-0551
Email: maggie.zhing@turbnco.com

High Temperature Refractory Ceramic

A new castable refractory liner material to be used in high temperatures has been developed. The capabilities of this new ceramic liner will be a 200°C improvement in maximum allowable operating temperatures, an operating life extension of five times, and additional cost savings in installation.

Contact: **Trilliam Thermo Technologies**
302 S. Depot Street
Enterprise, OR 97828

Charles Flanagan
Telephone: 541-426-6021
Email: hemf@uci.net

Hydrodyne Process for Tenderizing Meat

The hydrodyne process offers a unique way of tenderizing meat, particularly tougher meat with less fat. The innovative new technology reduces beef tenderization time from weeks to a fraction of a second by using hydrodynamic shock waves. The process can increase beef tenderness in tougher meat cuts by as much as 72% without changing natural appearance, texture, or flavor.

Contact: **Hydrodyne, Inc.**
988 Boulevard of the Arts
Sarasota, FL 34236

John B. Long
Telephone: 941-954-6562
Email: stan.klapper@
hydrodyne-tender.com

Insert Drill Having Three or More Flutes

A newly developed, patented drill concept uses a three-fluted design to lower horsepower requirements by allowing smaller inserts and producing smaller metal chips. For through-hole drilling, a metal slug is not ejected as the drill exits the drilled hole. This design results in a smooth finished hole eliminating the need for two or more machining operations.

Contact: **Fabiano Cutting Tools, Inc.**
4776 Huxley Drive
Rockford, IL 61101-9002

Joseph Fabiano
Telephone: (815) 968-8089
Email: jff120223@aol.com

Membrane Technology to Remove Entrapped Air from Ammonia Refrigeration Systems

An ammonia-selective gas separation membrane technology was developed and tested to determine operating parameters. The technology is potentially a simplified way to continuously purge air from ammonia refrigeration plants. A prototype commercial membrane separator is proposed for evaluation in an ammonia refrigeration test skid.

Contact: **Enerfex, Inc.**
P.O. Box 1061
Williston, VT 05495

Richard A. Callahan
Telephone: 802-658-6629
Email: enerfex@aol.com

Miniature, Inexpensive, Amperometric Oxygen Sensor

A new sensor to measure oxygen partial pressure from parts-per-million levels to 100% oxygen has been developed. It has particularly good sensitivity in the combustion range of 0.1% to 5% oxygen partial pressure. The new amperometric sensor, which is a multi-layer ceramic capacitor, is ideal for inexpensive mass production. The large reduction in cost of the sensor will economically allow any combustion process, including industrial, commercial, and residential furnaces and boilers, to be more closely monitored and controlled, thus saving energy.

Contact: **CeramPhysics, Inc.**
921 Eastwind Drive
Suite 110
Westerville, OH 43081

Fred Clark
Telephone: 614-882-2231
Email: cpi@infinet.com

Nickel-Based Superalloy with Improved Weldability and Oxidation Resistance

Testing of a new nickel-based superalloy has been completed. Oxidation resistance was shown to be equivalent to current-generation single crystal alloys, and weldability was determined to be excellent without the need for preheating. The alloy derives it's properties by the addition of palladium, which enhances high-temperature oxidation resistance and allows for a reduction in aluminum that directly results in improved weldability.

Contact: **Pennsylvania State University**
110 Technology Center
University Park, PA 16802

Eric Whitney
Telephone: 814-865-3916
Email: EricWhitney@psu.edu

Polymer-Dispersed Ferroelectric Smectic-C* Display Technology

With this technology, rugged devices can be fabricated, even on plastic substrates. Beam steering devices, such as electrically controllable one- and two-dimensional optical gratings, have been fabricated. Using a photomask during phase separation, this technology has been used to construct a microlens array with a diameter of less than 100 micrometers and a natural focal length ranging from 2 mm to 5 cm. With the help of an electric field, the focal length of the microlenses can be increased to infinity. A focusing lens can be rendered a defocusing lens. This does not appear to be possible with any other technology with such a simple fabrication method.

Contact: **Kent State University**
Department of Physics
Kent, OH 44242

Satyendra Kumar
Telephone: 330-672-2566
Email: skumar@kent.edu

Process Particle Counter

The process particle counter (PPC) uses optical technology with fixed alignment to provide a continuous, real-time, robust, stand-alone particulate monitor that allows expanders and gas turbines to operate closer to optimum conditions. Such conditions improve efficiency, protect turbines, and allow lower-quality fuels to be used. The PPC technology expands applications for efficient use of power-recovery expanders and gas turbines.

Contact: **Process Metrix LLC**
2110 Omega Road
Suite D
San Ramon, CA 94583

Don Holve
Telephone: 925-837-1330
Email: dholve@processmetrix.com

Radiation Barrier Heating Mantle for High-Temperature Furnaces

Retort furnaces, which consist of a heating-mantle jacket surrounding a retort vessel, are widely used to generate high temperatures for the metal-processing, chemical-processing, and heat-treating industries. A new porous wall radiation barrier (PWRB) heating mantle represents a breakthrough in heating mantles that significantly increases heat-transfer rates over both the existing gas-fired heating mantle and the electrically heated mantle. This unique development results in a heat-transfer rate in the 1,800°F to 2,400°F range that is 2 to 4 times greater than electric and conventional gas-fired mantles.

Contact: **Procedyne Corp.**
11 Industrial Drive
New Brunswick, NJ 08901

Tom Parr
Telephone: 732-249-8347
Email: trparr@procedyne.com

Self-Dressing Resistance Welding Electrode

The project is designed to produce an electrode from a unique metal-matrix composite material that employs a ceramic substrate as the load-bearing element and a metal matrix as the conduit for the electric current flow. The project will be carried out in four separate tasks, consisting of material selection, design development and optimization, fabrication and model verification, and performance test and evaluation.

Contact: **Lektrocorp, Inc.**
52 N. Main Street
Clarkston, MI 48346-1516

Bryan P. Prucher
Telephone: 313-974-3137
Email: lektrocorp@aol.com

The Road Patcher

The Road Patcher, a pothole-patching device, is a self-contained unit that is attached to the rear of a conventional dump truck. The truck's engine-powered hydraulic motors and compressed air system power the system, which cleans out a pothole and fills and compacts it. The device is designed to repair potholes quickly and efficiently, requiring only a single crew member and a truck driver. A self-contained version of the road patcher is mounted on a trailer with an auxiliary power unit to drive the whole system

Contact: **Kneeland Family LLC**

Reginald J. Kneeland
Telephone: 410-442-4009
Email: k6453@aol.com

Tough-Coated Hard Powders

This new class of tool and die materials is being developed to replace tungsten carbide and cobalt mixes in producing products of extreme hardness and toughness. Tools made with tough-coated hard powders do not require an external coating because hard and tough phases are already dispersed throughout the tool, resulting in a continuously renewed wear surface within a tough substrate. This surface will greatly extend tool life, reducing manufacturing costs.

Contact: **Allomet Corp.**
509 Hahntown-Wendell Road
North Huntingdon, PA 15642

Richard E. Toth
Telephone: 724-864-4787
Email: RickToth@aol.com

Grant Originally Awarded to: **EnDurAloy Corporation**

Tribopolymerizatiom as an Anti-Wear Mechanism

Tribopolymerization is an advanced technology that uses molecules called monomers to create perpetually renewing films directly on surfaces that require lubrication, such as ceramic or alloy steel. Unlike the action of surface treatments of coatings, which wear away, these protective polymeric films form continuously in critical areas of boundary lubrication and wear. The films efficiently form in localized areas where the greatest amount of wear occurs, reducing wear and friction, and saving energy in the process.

Contact: **Virginia Polytechnic Institute and State University**
609 Watson Lane
Blacksburg, VA 24061-0238

Michael J. Furey
Telephone: 540-231-7193
Email: mfurey@vt.edu

Wear Resistant Composite Structure of Vitreous Carbon Containing Convoluted Fibers

A novel method makes a composite material consisting of a vitreous carbon matrix containing convoluted fibers. The resulting product has better wear resistance, lower coefficient of friction and higher electrical conductivity than competing materials. The material is being developed for use in cable and third rail electric transportation systems, such as light rail.

Contact: **MRCC, Inc.**
P.O. Box 12694
Raleigh, NC 27709

Richard Ludington
Telephone: 919-785-1197
Email: dickludington1@earthlink.net

Grant Originally Awarded to: **Burton Technologies, Inc.**

Christian Veneer Dryer

This invention offers great advantages over conventional veneer drying systems, including energy savings and reducing damage to veneer sheets. Instead of blowing and then exhausting very hot air across a conveyor line of veneer, the green veneer sheets are placed in individual slots within a closed rotating drum. Natural gas or cogeneration heat drives moisture out of the veneer, and the moisture and some pollutants are condensed on cooling coils.

Contact: **Michael Christian**
1701 NE Beulah Road
Roseburg, OR 97470-8212

Michael Christian
Telephone: 541-874-8269
Email: whitefin@newshoes.net

Linear Corrugating

A new method of producing corrugated boxes was developed and demonstrated. The linear corrugating process changes the orientation between wood fibers and the corrugation, or flutes, in finished box production. Aligning the flutes parallel to the wood fibers causes the flutes to reinforce and strengthen the wood fiber. This results in a reduction of 25% in the amount of wood fiber while maintaining the crush strength of boxes.

Contact: **Containerboard Consulting**
100 Morgan Drive
Jesup, GA 31545

Lloyd Chapman
Telephone: 912- 427-4977
Email: lloyd36@bellsouth.net

Enabling Tool for Innovative Glass Applications

Flat architectural and automotive glasses have traditionally been fabricated using technologies that have inherent cutting limitations because they are generally incapable of fabricating glass products with small radii, concave edges, or pierced holes. A new technology uses waste glass as a low-cost media for abrasive water-jet cutting of glass and other materials. This technology can refine and automate the glass manufacturing process while reducing the number of stages and equipment required to produce intricate glass products.

Contact: **Michigan Technological University**
1400 Townsend Drive
Houghton, MI 49931-1295

J. M. Gillis
Telephone: 906-487-1820
Email: jmgillis@mtu.edu

Float Zone Silicon Sheet Growth

This innovative technology consists of a process to develop crystalline silicon sheet from a polycrystalline silicon source. Its primary goal is the efficient, low-cost production of high-quality crystal silicon sheet for the solar and electronics industry. Development of this process will provide several important benefits, such as high production rates, low cost in terms of material and energy input, good dimensional control, improved crystal quality, and remarkable purity the same as the source material.

Contact: **Energy Materials Research**
190 Science and Engineering Building
Rochester, MI 48309

Carl E. Bleil
Telephone: 248-370-3406
Email: bleil@oakland.edu

Frequency-Selective Solar Glazing System

A new glazing technology shows promise for reducing absorbed energy in automobiles and buildings. The characteristics of the new technology also make it ideal for trapping heat in solar-thermal collectors. The new glazing blocks convection, provides a frequency-selective radiation barrier, reduces energy loss to the environment, and results in energy savings by decreasing cooling loads. The improved glazing can be easily manufactured using current technology and represents a substantially new product for the glass industry.

Contact: **Orion Engineering, Inc.**
P.O. Box 2073
Westford, MA 01886

Thomas M. Regan
Telephone: 978-589-9850
Email: tregan@orionengineering.com

High Throughput Vacuum Processing for Innovative Uses of Glass

This project is developing a manufacturing process for cadmium telluride photovoltaic solar cells fabricated on glass substrates. The innovative process uses a proprietary air-to-vacuum-to-air system that allows continuous production of cadmium telluride cells rather than the slower batch process. In addition, maintenance and labor costs are lower and occupational safety is improved.

Contact: **AVA Technologies, Inc.**
1612 Faraday Circle
Fort Collins, CO 80525

Kurt Barth
Telephone: 970-491-8411
Email: Barth@engr.colostate.edu

Manufacturing Ceramic Products from Waste Glass

Ceramic products have traditionally been processed from raw materials that require high firing temperatures and energy-intensive processing steps. A new technology has been developed that lowers energy costs by substituting raw materials with recycled container-glass waste. Products manufactured by this new method are less sensitive to contaminants in the glass and can be made from difficult-to-recycle green or mixed-color waste glass. Firing temperatures can be reduced by as much as 37%, lowering energy costs and CO2 emissions. The technology has been used to design a low-cost highly-automated manufacturing process for producing ceramic tile from large volumes of waste glass. High-quality ceramic tile have been processed from 92-100% recycled glass with a wide range of colors and surface textures. The technology will also be extended to handle other types of waste glass, including industrial fiber-glass waste.

Contact: **Haun Labs**
122 Calistoga Road
Suite 116
Santa Rosa, CA 95409-3702

Michael J. Haun
Telephone: 707-538-0584
Email: mjhaun@haunlabs.com

Lost Foam Casting Quantifier Program

Several process variables specifically related to pattern quality can result in scrap rates and defects that could be significantly reduced through the proper quantifying and subsequent control of the pattern in lost foam casting. The detailed structure of foam and coating are determined using x-ray imaging methods. Intra-bead fusion is measured by polymer chain entanglement characterization. Foam and coating permeability are measured using gas flow measurement methods.

Contact: **Industrial Analytics Corporation**
10233 Chapman Highway
Seymour, TN 37865

Ronald Michaels
Telephone: 865-573-5843
Email: IAC2002Ron@netscape.net

Three-Dimensional Objects by Photosolidification

A fully automated prototype to aid in improving future design and confirming product validity and small-volume production has been developed and is in the early stages of commercialization. The system fabricates parts by imaging whole layers of liquid simultaneously and attaching one on top of another. Imaging is accomplished by flooding irradiation through a mask or negative in contact with the liquid, yielding parts that require no post cure. The system offers substantial reductions in both engineering design time and time for new product development, which will eventually allow prototype-manufacturing time to go from months to weeks.

Contact: **Light Sculpting, Inc.**
4815 N.Marlborough Drive
Milwaukee, WI 53217-5960

Efrem Fudim
Telephone: 414-964-5737
Email: lightsculpting@lightsculpting.com

Titanium Matrix Composite Tooling Material for Aluminum Die Castings

In the aluminum diecasting process, H-13 steel shot sleeves force molten aluminum into a die for casting. However, the conventional shot sleeve wears out after 20,000 to 40,000 casting cycles because of hot corrosion, which washes out the bottom of the sleeve. A new titanium-alloy composite material has a significant advantage over conventional technology because of its resistance to aluminum soldering and erosion. The material, CermeTi®, can be implemented as an entire shot sleeve or as a partial liner inserted into an existing H-13 shot sleeve.

Contact: **Dynamet Technology, Inc.**
Eight A Street
Burlington, MA 01803

Susan M. Abkowitz
Telephone: 781-272-5967
Email: smabkowitz@
dynamettechnology.com

Lower-pH Copper Flotation Reagent System

In the mining industry, flotation is a process that concentrates minerals from their ores prior to metal recovery. Current practice uses slurry pHs in excess of 10, achieved by adding burnt lime (CaO). However, lime production is an energy-intensive process that releases large quantities of carbon dioxide into the atmosphere. A new reagent system recovers copper minerals at much lower pHs than conventional reagents while not floating pyrite. The process reduces or even eliminates both the lime used in copper flotation and the accompanying carbon dioxide. The result is immediate cost and energy savings along with improved recovery of copper and other minerals.

Contact: **Versitech, Inc.**
1438 W. San Lucas Drive
Tucson, AZ 85704

Sharon Young
Telephone: (520)-742-3440
Email: skyvtec@aol.com

Soft *(Unfired)* Ceramic Particles via Dynamic Cyclone Classification

Many industrial processes involve the separation of particles from an airstream. The mining industry, in particular, has indicated a need for improved separation methods and reduced waste. In this technology, the particles are separated and transported by boundary layers and induced airflow vorticity near a stack of rotating (slightly separated) disks, which minimizes particle impact and attrition, as well as component wear. The dynamic cyclone classifier offers substantial potential for indirect energy savings by reducing the amount of off-spec product processed to achieve the same amount of product output. Smaller scale devices, operating under the same separation principles, can generate sharp particle classification cuts below 10 microns and are targeted for the pharmaceutical/neutriceutical, food/additives, cosmetic and specialty chemical markets.

Contact: **InnovaTech, Inc.**
P.O. Box 12744
Research Triangle Park, NC 27709-2744

Steve R. Wright
Telephone: 919-881-2197
Email: wright@novafilter.com

Composite-Reinforced Pipe

Composite technology uses high-strength isopolyester resin-glass fiber to reinforce conventional steel liners, increasing the carrying capacity of pipelines. These pipelines can be safely operated up to pressures of 3,400 psi and offer enhanced pipeline integrity. This type of pipe is ideally suited to long, high-pressure transmission lines. Testing of the composite-reinforced pipe is continuing in the field with regulatory approval for use as natural gas pipelines in Canada expected in 2005. With the proper pre-stress of this pipe on a ductile steel core, the potential for hydrogen induced cracking is significantly reduced. Therefore, it is the ideal pipe for the transmission of hydrogen.

Contact: **NCF Industries, Inc.**
807-D W. Main St.
Santa Maria, CA 93458

Norman Fawley
Telephone: 805-801-7416
Email: NCFLBCA@aol.com

Distillation Column Flooding Predictor

A new control technology provides a more accurate estimate of distillation column flooding. The patented pattern recognition technology predicts liquid and jet flooding in the petroleum-refining process. The system identifies patterns of transient tower instabilities, which have been discovered to precede column flooding. Such early identification allows the distillation column to be operated closer to the true flood limit, thus increasing the efficiency of the refinery process and increasing capacity while avoiding the actual flood event.

Contact: **2ndpoint, Inc.**
9238 Olcott Avenue
St. John, IN 46373-9727

George Dzyacky
Telephone: 219-743-3768
Email: ged@2ndpoint.com

Distributed Optical Fiber Sensors for Continuous Liquid Level Tank Gauging

Numerous sensors are available on the market today for detecting liquid levels in stationary and mobile fuel tanks but all generally suffer from including high initial costs, high maintenance costs, or unreliability. A multipoint tank gauging device being developed offers the level of sensitivity needed by industry and interfaces with most computer systems. Additionally, it is 2 to 5 times less expensive than existing technologies. This new technology reduces energy waste and lowers overall costs, key benefits to the petroleum, chemical, and transportation industries.

Contact: **Noverflo, Inc.**
1724 Yale Place
Rockville, MD 20850

Dr. Joram Hopenfeld
Telephone: 301-340-1625
Email: Noverflo@aol.com

Method for Cutting Steam Losses During Cyclic Steam Injection of Wells

When operated in the sequential cyclic steam injection mode, the new system injects steam into the reservoir to reduce the viscosity of heavy oil so that it flows from the wells at economic rates. In this mode, one of the laterals is under steam injection (at a relatively high pressure), while the other is under pumping (at a very low suction pressure). After the steam is injected into one drain hole for a period of time, the well starts to produce oil. Conversely, the other drain hole, originally under production, is converted to steam injection. The steam and production tubing are in proximity to minimize heat losses from the tubing carrying steam to the formation.

Contact: **S-Cal Research Corporation**
32 San Marino Drive
San Rafael, CA 94901

Michael Gondouin
Telephone: 415-456-8237

Process for Conserving Steam Quality in Deep Steam Injection Wells

High steam quality, required for successful heavy oil recovery, is difficult to achieve in deep wells from surface-generated steam because of excessive steam tubing heat loss. Three methods are available to reduce such a loss: insulated tubing, a gas-filled casing-tubing annulus, and a heat source in the annulus gas to prevent condensation of water vapor on the casing wall. All three methods have been combined in a new process, in which a heat source is provided by hot oil and water flowing from the reservoir to the surface in production tubing that is parallel to the steam tubing.

Contact: **S-Cal Research Corporation**
32 San Marino Drive
San Rafael, CA 94901

Michael Gondouin
Telephone: 415-456-8237

Pulsed Laser Imager for Detecting Hydrocarbon and VOC Emissions

A new hydrocarbon detection device, the pulsed laser imager, uses the principles of infrared spectroscopy to locate and measure the extent of hydrocarbon leaks and emissions of volatile organic compounds (VOCs). The imager's main advantage over its competitors is its remote-sensing feature that does not require an air sample. The imager detects hydrocarbon leaks from a safe distance by analyzing the electromagnetic spectra of the compounds. Both the short- and long-range versions of the pulsed laser imager are flexible, sensitive, accurate, and intrinsically safe and provide a cost-effective solution to hydrocarbon detection.

Contact: **LaSen, Inc**
300 Telshor
Suite 600
Las Cruces, NM 88011

Allen R. Geiger
Telephone: 505-522-5110
Email: lasen@zianet.com

Well Bottom Fluid Implosion System to Stimulate Existing Well Flow

Up to 85% of the total number of existing perforation tunnels in oil/gas wells have remained plugged and nonproducing since their original completion. A fluid implosion system, the Implo Treat, improves existing well flow and extends profitable well life. The Implo Treat removes plugging material from existing well-bore perforations produced during routine perforating of well-bore casings into the oil/gas-bearing formations. After the perforation tunnels are unplugged with this mechanical/hydraulic system, the well production rate is greatly increased.

Contact: **Emmet Brieger**
HC67 Box 58
Nogal, NM 88341

Emmet Brieger
Telephone: 505-354-2522

Method of Making Steel Strapping and Strip

A new continuous process has been developed that produces high quality steel strapping and strip from rod stock produced from scrap steel. The process yields a higher quality, less expensive, product while increasing the amount of recycled steel in the finished product. The continuous process has lower processing and capital costs than the conventional production method while increasing the strength of the final product.

Contact: **Robert Reilly & Associates**
1050 Arbor Lane #203
Northfield, IL 60093

Robert D. Reilly
Telephone: 847-446-5860
Email: RobertR985@aol.com

Commercialized Technology

- PowerGuard® Photovoltaic Roofing System 102

Emerging Technology

- High-Intensity Silicon Vertical Multi-Junction Solar Cells 103

PowerGuard® Photovoltaic Roofing System

Photovoltaic (PV) Roof Tile Assembly Delivers Clean Solar Electricity to Buildings

With the help of a grant from the Inventions and Innovation Program, PowerLight Corporation has developed the PowerGuard roofing system that offers building insulation, shading, roof protection, and solar power generation encompassed in a single roofing panel. The roofing panel includes a photovoltaic module mounted on a 3-inch-thick styrofoam board coated with a proprietary, cementitious coating. Designed specifically for flat or slightly sloped commercial and industrial building roofs, the panel works as a retrofit over existing roofs, as a new roof with new construction, and for re-roofing. The system can be tailored to capacities of 1 kW or greater and allows easy expansion.

PowerGuard installations are saving energy and money from New York to Hawaii as well as overseas. A 540-kW system installed at the Santa Rita Jail in Dublin, California reduces the jail's annual energy load by over 800,000 kWh. On the opposite coast, a 186-kW system installed atop Tompkins County Public Library in Ithaca, New York generates 200,000k Wh per year despite the fact that Ithaca receives only 60% of the solar radiation compared with Southern California. Electricity demand is reduced when it is most expensive, such as during peak demand periods on hot summer days. Reducing the load during peak demand periods also decreases the threat of blackouts and other problems associated with overloading the utility grid.

Benefits

Ease of Installation

PowerGuard can tailor systems from 1 kW up to the building's peak load and offers easy expansion. The panels use a tongue-and-groove design to interlock adjacent panels for fast installation without penetrating existing roofing material.

Product Life

The lightweight PowerGuard system is designed to survive severe weather conditions and protects the roof membrane from harsh UV rays and thermal degradation for up to 30 years, approximately doubling the life of the roof.

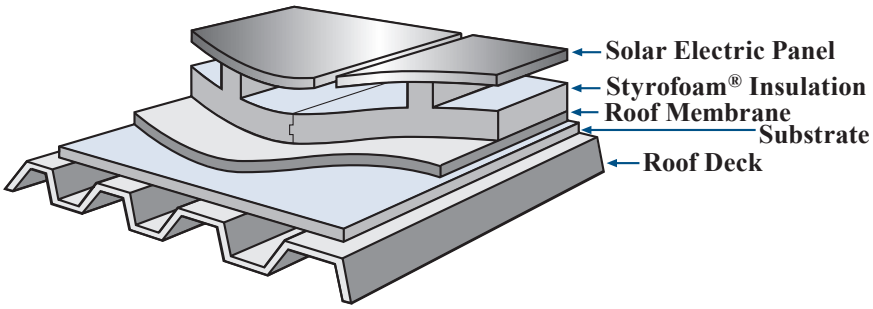

PowerGuard System Cutaway View

Overview

- Developed by PowerLight Corporation
- Commercialized in 1998
- Installations from New York to Hawaii and overseas.

Energy Savings

(Trillion Btu)

Cumulative through 2003	2003
0.236	0.099

Emissions Reductions

(Thousand Tons, 2003)

Particulates	SO_X	NO_X	Carbon
0.0	0.021	0.016	1.95

Applications

- Installed on commercial or residential buildings that have flat or low-slope roofs
- Economic for building owners and utilities located in summer-peaking service areas where utilities offer time-of-use rates

Capabilities

- PowerGuard is a photovoltaic power system in which the photovoltaic modules are integrated with the materials used for a building's roof.
- Feeds clean AC power into the building, displacing high daytime utility rates.

Contact: Powerlight Corporation - Stri Zulch - (510) 540-0550 - szulch@powerlight.com

High-Intensity Silicon Vertical Multi-Junction Solar Cells

This new solar cell combines high voltage with low series resistance operation to create highly efficient, concentrated solar power conversion at low cost. Output power densities exceeding 1000 times that of conventional solar cells have been demonstrated. The immediate application is for bulk electric power generation for large-scale (>100-kW) central power stations in sunny, semi-arid regions of the world. The simple design of the new cell results in lower manufacturing costs and robust reliability compared with existing concentrator cells.

Contact: **Photovolt, Inc.**
21282 Woodview Circle
Strongsville, OH 44149

Bernard L. Sater
Telephone: 440-878-1073
Email: VMJcells@aol.com

Emerging Technology

- Helical Reaction Hydraulic Turbine 106

Helical Reaction Hydraulic Turbine

The Gorlov Helical Turbine (GHT) is a newly developed technology that is relatively inexpensive, ecologically benign, and provides a reliable source of electricity by extracting the kinetic energy from flowing water. It is designed for hydroelectric applications in free flowing watercourses, which means it does not require a dam or other obstruction to the natural current flow. The GHT is a cross-flow turbine with airfoil-shaped blades which provide a reaction thrust that can rotate the GHT at twice the speed of the water flow. It is self-starting and can produce power from a water current flow as low as five feet per second (fps), with power increasing in proportion to the water velocity cubed. Due to its axial symmetry, the GHT always rotates in the same direction, even when tidal currents reverse direction. The standard model GHT (1 meter in diameter, 2.5 meters in length) can be installed either vertically or horizontally to the water current flow, in waters as shallow as four feet in depth. A single standard model GHT should produce from 1.5 kW in a water current flow of three knots (5 fps, 1.5 mps) to about 180 kW in a water current flow of 15 knots (25.35 fps, 7.72 mps). Testing of the GHT has demonstrated superior power efficiency (35%) in free flowing water currents compared with other turbines used in free-flow, unconstrained water currents. The GHT can also be used as a wind turbine.

Contact: **GCK Technology, Inc.**
425 Soledad
Suite 600
San Antonio, TX 78205-1511

Ed Kurth
Telephone: 210-496-5902
Email: kurth@gcktechnology.com

Grant Originally Awarded to: **Northeastern University**