Advanced Melting Technologies:

Energy Saving Concepts and Opportunities for the Metal Casting Industry

November 2005

BCS

BCS, Incorporated
5550 Sterrett Place, Suite 306
Columbia, MD 21044
www.bcs-hq.com

U.S. Department of Energy
Energy Efficiency and Renewable Energy
Bringing you a prosperous future where energy is clean, abundant, reliable, and affordable

Advanced Melting Technologies: Energy Saving Concepts and Opportunities for the Metal Casting Industry

Prepared for ITP Metal Casting

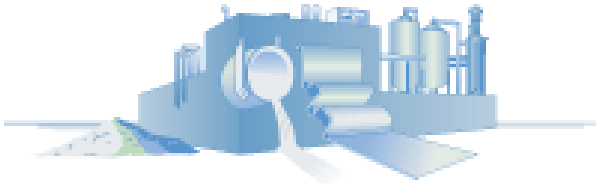

by

BCS, Incorporated

November 2005

Acknowledgments

This study was a collaborative effort by a team of researchers from University of Missouri–Rolla, Case Western Reserve University, and Carnegie Mellon University with BCS, Incorporated as the project coordinator and lead.

The research findings for the nonferrous casting industry were contributed by Dr. Jack Wallace and Dr. David Schwam, while the ferrous melting technologies were addressed by Dr. Kent Peaslee and Dr. Richard Fruehan. BCS, Incorporated researched independently to provide an overview of the melting process and the U.S. metal casting industry. The final report was prepared by Robert D. Naranjo, Ji-Yea Kwon, Rajita Majumdar, and William T. Choate of BCS, Incorporated.

We also gratefully acknowledge the support of the U.S. Department of Energy and Cast Metal Coalition (CMC) in conducting this study.

Disclaimer

This report was prepared as an account of work sponsored by an Agency of the United States Government. Neither the United States Government nor any Agency thereof, nor any of their employees, makes any warranty, expressed or implied, or assumes any legal liability or responsibility for the accuracy, completeness, or usefulness of any information, apparatus, product, or process disclosed, or represents that its use would not infringe privately owned rights. Reference herein to any specific commercial product, process, or service by trade name, trademark, manufacturer, or otherwise does not necessarily constitute or imply its endorsement, recommendation, or favoring by the United States Government or any Agency thereof. The views and opinions expressed by the authors herein do not necessarily state or reflect those of the United States Government or any Agency thereof.

Contents

Executive Summary i
1. Objective and Scope of the Study 1
2. Introduction 1
3. Melting Process Overview 3
3.1 The Melting Process 3
3.2 Energy Efficiency of the Melting Process 6
3.3 Melting Process Emissions 8
3.4 Selecting Appropriate Melting Technology 9
4. Current and Emerging Melting Technologies and Practices 9
4.1 Established Melting Furnaces 10
4.1.1 Crucible Furnaces 10
4.1.2 Cupola Furnaces 10
4.1.3 Electric Arc Furnaces 13
4.1.4 Immersion Heaters (Low-Temperature Melting) 15
4.1.5 Induction Furnaces 15
4.1.6 Reverberatory Furnaces 17
4.1.7 Rotary Furnaces 19
4.1.8 Stack Furnaces 20
4.2 Experimental Melting Furnaces 21
4.2.1 Electron Beam Melting (EBM) 21
4.2.2 Immersion Heaters (High-Temperature Melting) 22
4.2.3 Infrared Heating 23
4.2.4 Microwave Melting 24
4.2.5 Plasma Heating 25
4.2.6 Solar Furnaces 25
4.3 Heat Recovery Methods 26
4.3.1 Recuperators 26
4.3.2 Refrigeration 27
4.3.3 Regenerators 27
4.3.4 Thermoelectric Devices 28
4.4 Molten Metal Handling Systems 28
4.4.1 Dosing Furnaces 29
4.4.2 Electro-Magnetic Pump Systems 29
4.4.3 Ladles 30
4.4.4 Launder Systems 30
4.4.5 Mechanical Circulating Pumps 31
4.5 Fuel Combustion Technologies: Oxy-Fuel Burners 31
4.6 Preheating Systems 32
4.6.1 Shaft Furnace 32
4.6.2 Twin Shell System 33
4.7 Refractories 33
4.8 Melting Schedule 34
5. Challenges to Adopting New Technologies 34
6. Future Direction of Research: Potential Energy-Saving Technologies 36
7. Conclusion 39
Endnotes 42

Executive Summary

The metal casting industry is one of the most energy-intensive manufacturing sectors with the melting process accounting for over half (55%) of its energy consumption. Although its high energy expenses have been a significant concern for metal casters, the industry continues to use melting technologies with poor energy efficiency. The purpose of this study is to explore "Grand Challenge" or breakthrough opportunities that might dramatically reduce melting energy and to identify potentially energy-saving R&D areas based on the findings. The study was conducted to guide the Metal Casting subprogram of the Industrial Technologies Program (an initiative of the U.S. Department of Energy, Office of Energy Efficiency and Renewable Energy) in pursuing its energy reduction goal. The scope of the study includes current and emerging melting technologies in the industry worldwide, along with experimental technologies, retrofits for existing systems, and best practices.

The seemingly simple melting operation – heating metals to turn them into liquids for pouring – is actually complex, involving a series of steps that incur material and energy losses. These losses are attributable to several factors: undesired conduction, radiation and convection, stack loss (flue gases), and metal loss. The extent of the losses depends on the furnace design, the fuel used, and the method of imparting heat to the metals. Exhibit 1 compares the efficiency and metal loss for different types of furnaces. The low thermal efficiency of current furnaces calls for high-priority R&D to improve melting technologies.

Melting Furnace		Typical Capacities*	Common Use	Melt Loss	Thermal Efficiency
Crucible (Gas)		15 lbs - 1.5 tons	Aluminum	4-6%	7-19%
			Magnesium	4-6%	7-19%
			Copper-base	2-3%	7-15%
Cupola		100 lb/hr - 20 tons/hr	Iron	3-12%	40-50%
Direct Arc†		1.5 tons -100 tons	Steel	5-8%	35-45%
Immersion (low temperature melting)		1,600lb/hr	Zinc	N/A	63-67%
Induction†		2 lbs - 50 tons	Aluminum	0.75-1.25%	59-76%
			Copper-base	2-3%	50-70%
			Magnesium	2-3%	59-76%
			Iron	1-2%	50-70%
			Steel	2-3%	50-70%
Reverberatory	Electric†	0.5 tons - 125 tons	Aluminum	1-2%	59-76%
			Zinc	2-3%	59-76%
	Gas	0.5 tons - 125 tons	Aluminum	3-5%	30-45%
			Zinc	4-7%	32-40%
Rotary		N/A	Aluminum	N/A	35%
Stack Melter (Gas)		1 ton/hr - 10 tons/hr	Aluminum	1-2%	40-45%

Source: DOE/CMC http://cmc.aticorp.org/datafactors.html

**Information received from communication with AFS*

† The primary energy efficiencies of these furnaces are much lower (about one-third) than the listed efficiencies due to the use of electricity, which involves sizeable energy losses during generation and transmission.

Exhibit 1: Efficiency and metal loss for different furnaces

The U.S. metal casting industry, primarily consisting of small businesses (80% have <100 employees), are averse to taking new financial risks due to the typically small profit margins of the metal casting operations; they are, therefore, hesitant to invest in long-term R&D and to implement advanced technologies that involve replacing the entire furnace, even if they offer significant energy savings. The prime criterion for the commercial acceptance of new advanced melting technologies is that they must not be capital intensive for installation.

Emerging technologies such as solar melting, microwave melting, infrared heating, or plasma heating offer unconventional ways of providing enormous amounts of energy effectively to the metals; however, barriers like limited capital resources and melting capacities, and/or large space requirements make these innovative methods financially unviable for the metal casting industry. The plausible advances in melting technologies that hold potential for energy reduction, therefore, center on retrofit improvements for existing furnaces; these advances include oxygen-enriched fuel combustion, preheating of charge, molten metal delivery, and heat recovery from flue gases. Exhibit 2 shows estimated percentage energy savings achievable by implementing these advanced technologies. Furnace efficiency can be increased by 25-30% by utilizing one or a combination of the technologies identified.[1]

Melting Technologies	Estimated Energy Saving
Charge Preheating	5-10%
Refrigeration	5-10%
Air Preheating	10-20%
Molten Metal Stirring	5-30%
Operational Adjustments	0-30%
Oxygen Enrichment Technologies	0-40%

Source: Albany Research Center, "Improving Energy Efficiency in Aluminum Melting" presentation at 2005 Aluminum Portfolio Review

Exhibit 2: Estimated energy savings from new advanced melting technologies

This study found that there is little potential for a single melting technology to provide a "one-size-fits-all" solution because foundries vary from each other in several respects, such as the metals being melted, alloying requirements, product specifications, furnace capacities, and the casting process. Further, the melting operation comprises several steps, each providing an opportunity for improving energy use. It is, therefore, conclusive that the path to achieving the maximum possible energy reduction at a given metal casting operation lies in implementing a combination of energy-efficient retrofits that are best suited for that individual facility. It is, accordingly, recommended to develop a web-based database tool that will inform metal casters about the currently available retrofits and accept inputs on their melt operation specifics to determine the optimal energy-efficient solution for their facility.

The energy-saving melting technologies still pose several technical barriers for implementation. Pursuing R&D to remove these barriers, as well as continuing further development of the innovative melting methods will provide the best results in the long term. The key to improving efficiency of melting technologies for the metal casting industry resides in developing retrofitting technologies and logistics improvements that offer large energy savings and require low financial risk.

1. Objective and Scope of the Study

The objective of this study was to explore the concepts of breakthrough technologies in melting metals that may dramatically reduce the energy consumption. The study will guide the Industrial Technologies Program's (ITP) Metal Casting subprogram in pursuing high-value R&D opportunities for enhancing energy efficiency of the metal casting industry.

The study was undertaken as part of ITP's Grand Challenge mission, a strategy seeking dramatic improvements in industrial energy efficiency. The study aims to provide a preliminary concept definition of "Grand Challenge" opportunities in the context of advanced melting technologies. It accomplishes its purpose by examining current and emerging melting technologies and discussing their technical barriers to scale-up issues and research needed to advance these technologies. It identifies potential avenues for improving melting efficiency, lowering metal transfer heat loss, and reducing scrap and improving yield.

The scope of the study includes ferrous and non-ferrous melting applications in the metal casting industry, both in domestic and international markets. Although, the report focuses on metal melting applications, the melting technologies and developments discussed in this report are in general applicable to all furnaces and molten material processes, including primary aluminum, secondary aluminum, glass, iron and steel, and other industries.

2. Introduction

Melting of metals, glass, and other materials has been a vital manufacturing process for several thousand years, producing molten liquids that can be poured and solidified into useful shapes. Although the basic process continues to be the same, the utility of cast products has come a long way. The process that created tools and exotic goods for only a privileged few in the Bronze Age contributes to components used in over 90% of manufactured goods in our society today. Since the dawn of the industrial age, the tremendous progress in the melting process equipment, the range of molten materials, the chemistry and thermal controls, and the complexity of the finished products has enabled cast components in building a vast variety of products – automobiles, power generators, railroad cars, oil pipelines, military hardware, medical instruments, etc. to name just a few.

The energy efficiency of any foundry largely rides on the efficiency of the melting process – a multi-step operation where the metal is heated, treated, alloyed, and transported into die or mold cavities to form a casting. The melting process is not only responsible for the energy consumption and cost-effectiveness of producing the castings (Exhibit 3), but it is also critical to the control of quality, composition, and the physical and chemical properties of the final product.

Melting is the most energy-intensive operation in metal casting industry, accounting for about 55% of the total energy use in foundries

Source: 2004 Metal Casting Annual Report

Exhibit 3: Process energy costs in metal casting

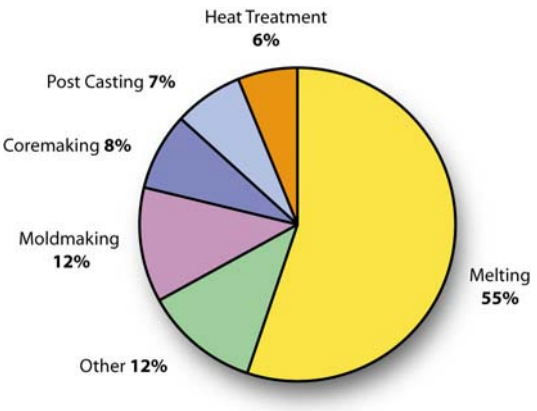

Melting being highly energy intensive, the metal casting industry is one of largest spenders on energy in the U.S. manufacturing sector. The industry spent $1.2 billion in fuels and electricity purchases alone in 1998. The concern over the energy efficiency of processes has been growing with the recent rising costs of energy. The metal casting industry is specially impacted by the large price swings of natural gas as it is the industry's largest energy source (Exhibit 4). Factors like increasing energy demands, compounded by spikes in energy costs from world events and natural disasters (like Hurricanes Katrina and Rita), will continue the upward trend in energy costs, pressing the need for developing energy-efficient solutions for the melting process.

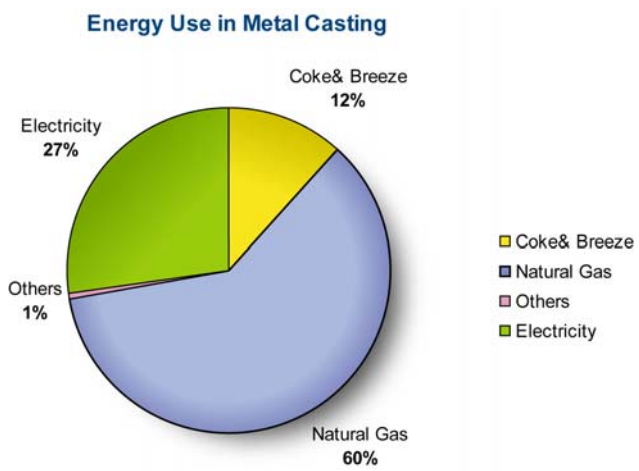

Source: 2004 Metal Casting Annual Report

*The amount of electricity represents delivered energy

Exhibit 4: Energy source in metal casting

Although the energy consumption in the melting process has been a significant concern in foundry operations, the industry continues to use melting technologies with low energy efficiencies. Studies have shown that by implementing best practice technologies, iron and aluminum melting can save approximately 1.2 and 3 million Btu per ton respectively.[2] Considering that iron and aluminum casting tonnages comprise more than 85% of the total casting tonnage, potential savings in melting these metals are substantial. In summary, striving to reduce energy consumption in melting ferrous and non-ferrous metals shows a promising path to lowering operating costs in foundries and, in turn, cutting down the production costs for the entire U.S. manufacturing sector.

3. Melting Process Overview

The melting of any industrial metal used in manufacturing involves the following steps:

1. **Preparing the Metal and Loading** – removing dirt and moisture and sometimes, preheating the charge material, such as scrap metal or ingot; and introducing solid charge into the furnace system
2. **Melting the Metal** – supplying energy from combustion of fuels, electricity or other sources to raise the metal temperature above its melting point to a pouring temperature
3. **Refining and Treating Molten Metals** – introducing elements or materials to purify, adjust molten bath composition to provide a specific alloy chemistry and/or affect nucleation and growth during solidification
4. **Holding Molten Metal** – maintaining the molten metal in molten state until it is ready for tapping
5. **Tapping Molten Metal –** transferring the molten metal from the furnace to transport ladle
6. **Transporting Molten Metal –** moving the molten metal to the point of use and keeping the metal in molten state until it is completely poured

Material and energy losses during these process steps represent inefficiencies that waste energy and increase the costs of melting operations. Modifying the design and/or operation of any step in the melting process may affect the subsequent steps. It is, therefore, important to examine the impact of all proposed modifications over the entire melting process to ensure that energy improvement in one step is not translating to energy burden in another step.

3.1 The Melting Process

1. Preparing and Loading Metal for Melting

Preheating or drying the scrap or ingot is often practiced in many melting applications, especially those that involve iron or aluminum. It offers several benefits: removal of moisture and other volatiles from the charge, preventing the risk of an explosion in the furnace and inhibiting slag formation from absorption of hydrogen formed when hot aluminum comes in contact with moisture; reduction in melting energy requirements; and increase in the melting capacity of the furnace. Aluminum scrap (containers, sidings, etc.) requires removal of paint, lacquers, machining oils, and other contaminants. This removal is usually accomplished thermally.

Preheating and contaminant removal are typically accomplished by natural gas heating. Some foundries employ preheating systems that reuse hot flue gases of the melting furnace to pretreat and preheat. A scrap decoater developed by Energy Research Company (ERCo) removes various organics found in scrap aluminum.[3] The scrap is decoated in a low-oxygen, controlled atmosphere rotary kiln. Hot gases enter the kiln's center tube, flow parallel to the scrap, and vaporize the organics in the scrap in the kiln. The oxygen in the kiln is kept below the flammability limits of the organic components, avoiding combustion in the kiln. These systems recover energy that is otherwise lost in most operations.

Energy can be lost during the loading process when the prepared materials are loaded into the furnace for melting. If batch furnaces are loaded cold, the melting operation becomes inefficient as the entire furnace mass must be heated along with the metal. Conversely, a continuously operated furnace offers greater efficiency, not requiring additional energy to heat up the furnace in each melting cycle. However, loading a hot furnace requires opening the furnace door or lid, which allows vast quantities of heat to escape by convective flow of hot gases and by radiation. Numerous techniques and systems have been developed to address this problem. These include side wells furnace where heat loss is minimized as molten metal circulates through the charge well and back into the hearth for reheating during the charging period of furnace cycle.[4] It has also been demonstrated that submerging the scrap into the molten bath for melting reduces metal lost to oxidation (particularly for aluminum).

2. Melting the Metal

Furnaces operate in aggressive environments, where several components—molten metals, furnace linings, atmospheric gases, and products from combustion of fuels—coexist at extremely high temperatures. Several factors come into play besides the core ingredients of heat and metal as illustrated in Exhibit 5.

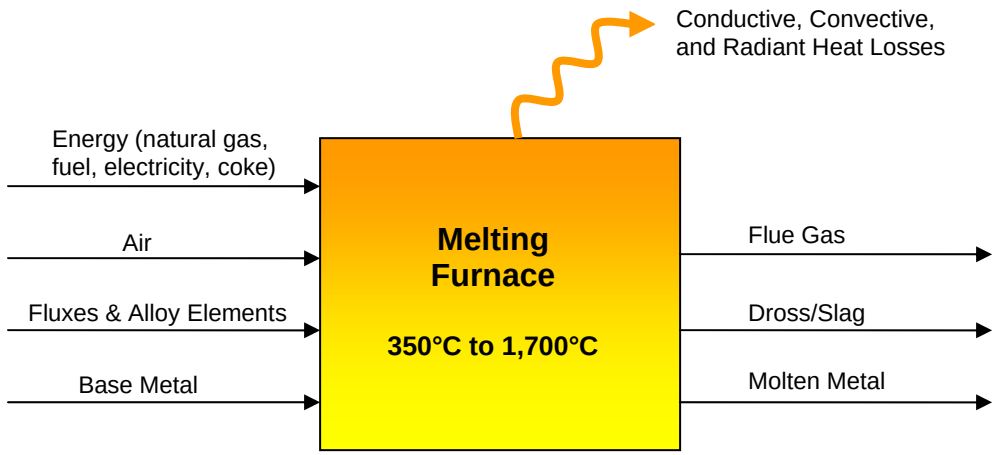

Exhibit 5: Schematic of melting process

A melting furnace derives its heat from solid fuels (coke and breeze), natural gas, electricity, or other sources of energy. Furnaces vary in design, geometry, capacity productivity (melting rates), materials-of-construction, and mode of operation (batch or continuous). Other factors related to the energy source also affect the furnace design which include how the energy is transferred to the molten material, how combustion gases are removed, what refining and treating equipment must enter the furnace, how long the holding periods are, and how the molten metal will be tapped. The operating temperatures required in the furnace depend on the melting and pouring temperature of the materials being melted. They can range from about 350°C (650°F) for zinc alloys to 1,700°C (3,100°F) for alloy steels.

3. Refining/Treating Molten Metals

Refining is the process of degassing the melt, removing undesirable solid phase (typically oxides), and trimming the alloy composition to be within desired limits. The molten metal stage

offers a critical opportunity to refine and maximize the quality of the final casting. Therefore, processes such as alloying, degassing, filtration, fluxing, and grain refinement and modification are usually carried out in the liquid metal prior to casting. At this stage, the composition of the melt can be fine-tuned to the desired proportions by appropriate additions.

Alloying elements with high vapor pressure and high reactivity at elevated temperatures, such as sodium, calcium and magnesium, tend to be depleted from the molten alloy with time and high temperature. Loss of these elements will affect the physical/mechanical properties of the castings, leading to increased scrap and waste.

Gases that dissolve into the molten charge from the ambient air, combustion byproducts, and the furnace linings can also affect the quality of the final product. For example, molten aluminum has a high affinity for hydrogen formed when aluminum comes in contact with water vapor, a natural by-product from combustion and occurring naturally in the atmosphere. The hydrogen solubility increases with time and temperature. As aluminum solidifies, the dissolved hydrogen escapes imparting an undesirable porosity to the final product, a common problem at cast aluminum facilities. Degassing and filtering out solid inclusions, such as oxides, has, therefore, become a norm at U.S. casting facilities. Disposable ceramic filter is one of the current methods that reduces cost and improves the quality of the castings. Disposable ceramic filters are placed in the mold runner system to trap solid inclusions formed during melt transfer between the furnace and its entry into the mold cavity. Determining hydrogen content in aluminum alloys has also become common. Currently, ultrasound is being explored as a potential means in commercial operations to reduce the porosity. Continued development of better technologies is needed to monitor the quality of the molten metal economically.

The current practice to control the composition of molten metal is expensive and time consuming. It requires taking a small sample of molten metal out of the molten bath and transporting it to a laboratory for chemical analysis. This creates a lag time between measured and actual composition, which can lead to excessive processing, increased energy use and emission, and off-spec product that may need to be down-graded or scrapped. ERCo has recently introduced Laser-Induced Breakdown Spectroscopy (LIBS) technology that employs a laser and a spectrometer to measure in-situ and in real time the constituents of the melt in a process furnace.[5] Such technologies can reduce defects, increase furnace cycle times leading to continuous and semi-continuous operations, increase furnace life by diagnosing the state of the furnace, and increase automation of furnace operations.

4. Holding Molten Metals

The molten metal is often held in a furnace before being poured or injected into molds to allow for a continuous supply of molten metal from the melting furnace with consistent composition and quality. This is especially important when the charge materials are composed of large amounts of low-quality metallic scrap with poor composition such as blends of consumer durable goods. Holding furnaces also help casters take advantage of the off-peak electricity hours to melt charges at reduced energy rates. However, the holding step in the melting process adds to melting inefficiencies because energy is utilized in holding the metal in its molten state. An ideal melting operation would melt metal into its liquid state and then transport that metal directly to the pouring lines, eliminating the need to hold the molten bath in a holding furnace.

5. Tapping Molten Metals

Tapping is the process of removing the molten metal from the furnace and pouring it into ladles or molds. Tilting furnaces can pour molten metal directly into transfer ladles for casting or can transfer it to an adjacent holding furnace. A tilting furnace is ideally suited for providing a controlled and consistent metal flow safely and reliably with minimal harm to the melt quality.

6. Transporting Molten Metals

After being tapped, the molten metal must be transported from the melting furnace to the holding furnace or the pouring lines. Different types of ladles are used to pour the molten metal into the mold cavities. These include bottom-pour, lip-pour, teapot, hand, bull, trolley, and crane. Ideally, transfer ladles are preheated to maintain the required pouring temperature at the pouring station. Some operations also practice "superheating" the melt, i.e., raising the temperature several hundred degrees above the pouring temperature, to achieve the same result. The transfer ladle capacities can range from 100 pounds to 35 tons or higher depending on the foundry's production capacity.

Transfer ladles consume significant energy because they require preheating and/or superheating the melt to maintain the desired pouring temperature. Additionally, substantial radiation loss can occur from the top and the sides of the ladle. Researchers at University of Missouri–Rolla noticed that the radiation losses for steel occur predominantly from the ladle sides because the slag cover acts as a natural insulator for the top surface. This finding stresses the need for improved refractory material for steel foundry transfer ladles.

3.2 Energy Efficiency of the Melting Process

The energy efficiency of the melting process is calculated by dividing the amount of theoretical energy needed to melt a metal and raise it to its pouring temperature by the actual amount of energy consumed in melting, treating, holding and handling the material.

$$\text{Energy Efficiency} = \frac{\text{Theoretical Energy Required}}{\text{Actual Energy Used}} \text{ X } 100$$

Several factors affect the energy efficiency of a furnace:

1. Stack Losses: Stack losses are due to the heat discharged via flue gases and partially combusted gases. These represent the greatest energy loss in a fuel-fired furnace. The amount of energy lost is related to the stack gas temperature, gas mass, and composition. Thermodynamically, the temperature will always be in excess of the molten metal holding temperature. There is no way to design a furnace with the exiting gas temperature equal or less than the metal temperature. The furnace design can control the mass of gas that exits a furnace system, which is a function of the oxygen required to combust the furnace fuel. When air is used as the source of oxygen, the mass of exiting gases is nearly 21 pounds for each pound of fuel consumed. Pure oxygen would lower the mass of exiting gas to only 5 pounds. Oxygen enrichment systems offer a significant opportunity to reduce the mass of hot exiting gas, as well as provide hotter flame temperature, which will lead to higher heat

transfer rate and reduced time required to melt the charge. This, in turn, would increase the productivity and cut down the energy lost through the furnace walls. The ratio of air (or oxygen) to fuel in the furnace is also crucial. Too little air will result in unburnt and wasted fuel, while excess air will waste energy in heating the additional air mass. Flue stack energy can be recovered to some degree if a regenerator or a recuperator is placed in the path of the exhaust gases and used to heat the incoming combustion air or if the flue gases can be used to preheat the metal charge.

2. Metal Loss: The surface of the molten metal can oxidize leading to substantial metal loss in the form of "slag" (term associated with ferrous alloys such as steel) or "dross" (in case of non-ferrous alloys such as aluminum). This lost metal must be replaced by new metal. The extent of the metal loss depends upon the affinity of the molten constituents for oxygen and the melting method. These losses are the highest in aluminum-magnesium alloys.[6] Molten metal loss is a serious issue when considering a furnace design. If the metal losses are high, the overall operation would be inherently inefficient and uneconomical.
3. Radiation Losses: These occur as energy emitted from hot furnace and enclosure surfaces. When the furnace lid or door is opened for charging and tapping, radiation heat losses increase significantly. Radiation losses from an uncovered bath can reach up to130 kWh/hr (0.44 MBtu/hr) for an iron furnace with a 10-ton capacity.
4. Conduction and Convection Losses: These losses can be controlled by using suitable refractory materials and maintaining a tight fit between the lid and the furnace body.
5. Slag/Dross Removal: This can also contribute to energy loss. The extent depends on the temperature, the composition of the slag/dross, the technique used and how long the furnace is left open to remove the slag/dross. This loss is not substantial to affect the overall furnace efficiency, unless huge amounts of slag/dross are removed.

The extent of these energy losses vary depending on the furnace design, operating practices, metals being melted and the source of energy being used. Exhibit 6 displays a breakdown of the energy consumption (different forms of energy loss and energy used in melting) for ferrous and non-ferrous melting.

Energy Spent	Ferrous Melting[7,8]	Non-Ferrous Melting[9,10]
Stack Losses (flue gases)	0 to 50%	35 to 50%
Dross/Slag	0 to 10%	10 to 20%
Radiation/Conduction/Convection	10 to 50%	0 to 10%*
Molten Metal	40 to 80%†	10 to 40%

* Heat lost from walls

† The ferrous melting efficiency is much lower than listed due to the use of electricity, which involves sizeable energy losses during generation and transmission.

Exhibit 6: Heat loss through various modes and useful energy

3.3 Melting Process Emissions

Emissions formed as a result of the melting process are a concern in improving melting technology. Emissions are primarily generated from two sources during the melting process:

- Emissions related to energy supply
- Emissions related to preparing, refining and treating

Energy supply emissions are the result of combustion either at the melting facility or at the plant generating the electric power used in melting. Preparing, refining and metal treating also result in emissions that are related to the raw materials brought into the process.

Sixty percent of the metal casting industry's energy requirements is supplied by natural gas and 27% from electricity. The remainder includes other fuel sources such as coke and breeze.[11] Natural gas is the cleanest burning of all the fossil fuels. Composed primarily of methane, the main products of the combustion of natural gas are carbon dioxide (CO_2) and water vapor. Emissions of nitrogen oxides (NO_x), sulfur dioxide (SO_2) and particles from natural gas combustion are one to three orders of magnitude lower than that for coal and fuel oil, as shown in Exhibit 7.

Emissions (pounds per billion Btu of energy input)	**Natural Gas**	**Oil**	**Coal**
Carbon Dioxide	117,000	164,000	208,000
Carbon Monoxide	40	33	208
Nitrogen Oxides	92	448	457
Sulfur Dioxide	1	1,122	2,591
Particulates	7	94	2,744
Mercury	0	0.007	0.016

Source: EIA - Natural Gas Issues and Trends 1998

Exhibit 7: Fossil fuel emission levels

Melting systems that use electricity do not produce onsite emissions related to the actual heating of materials. However, significant offsite emissions are produced in the generation and transmission of electricity. These offsite emissions are directly related to the fuels used to produce electricity. The major fuels for electric power generation are coal, producing about 51% of the electricity in the United States; nuclear, producing 20%; and natural gas, producing 6%. The low efficiency of electricity generation and transmission is also an important factor to consider in energy and emission analyses. It requires about 10,600 Btu of fuel to produce 1 kWh (3,412 Btu) of electricity. When coke is used as a fuel and a carbon source in melting furnaces (e.g., for iron and steel melting), emissions consist mainly of CO_2 and CO from incomplete combustion and to a lesser extent, NO_x and SO_x.

Emissions related to preparing, refining, and treating are generated in varying amounts depending on the degree of processing that must be accomplished. These emissions result from the dirt, moisture, and metallic impurities in the metal charge; erosion and corrosion products from the metal's contact with the refractory; and the addition of alloying elements and treatment chemicals used for removal of impurities and dissolved gases.

3.4 Selecting Appropriate Melting Technology

Industrial operations have to address a broad range of considerations that have a direct effect on their "bottom line" when faced with the choice of melting technologies. These factors include:

- Space availability (floor space & height)
- Type and variety of alloys to be melted
- Fluctuations in metal demand during operation
- Quality of the metal
- Quantity of dross/slag
- Emissions and environmental considerations
- Maintenance requirements
- Capital investment
- Quantity of the metal required
- Alloying requirement
- Operating costs, especially in labor
- Reliability of the equipment
- Durability of the furnace

Since each foundry may attribute a different priority to each one of these factors, there is no "one-size-fits-all" decision in the selection of melting technologies. Energy efficiency is not necessarily the only significant criterion in selecting melting equipment. Where energy costs are high (e.g., in Europe), energy efficiency has been an operating priority for many years. For example, stack furnaces are more common than reverberatory furnaces for melting aluminum in Europe. However, in the United States, 95% of aluminum is melted in gas reverberatory furnaces, which operate with energy efficiency of 20-30% but require lower capital cost and provide easier operation and maintenance than stack melters.

A furnace design must meet some requirements to provide for an efficient melting process. These requirements include the ability to produce high-quality metal, to accurately control bath temperatures, to minimize metal losses, and to meet environmental concerns, while maintaining high energy efficiency. Although the cost of fuels, metals and labor are constantly changing variables, energy efficiency will always be an important consideration, especially in the face of the current trend of rapidly rising energy costs. Improving efficiency of melting, while addressing all other aspects of the operation, is critical in keeping the metal casting industry competitive.[12]

4. Current and Emerging Melting Technologies and Practices

This section of the report describes different types of melting technologies that are currently used in the metal casting industry. It discusses their benefits, technical barriers, and scale-up issues, and examines advances in furnace technologies that improve energy efficiency and reduce melt loss. Non-conventional melting technologies are included even though their practical application may be limited, as they offer alternative approaches and add to our knowledge base in the melting technology field. Additionally, the more practical energy-saving opportunities are described, such as retrofits for existing furnace systems, changes in fuel source, and best practices.

4.1 Established Melting Furnaces

4.1.1 Crucible Furnaces

A crucible furnace is the least expensive melting method preferred for melting small volumes of non-ferrous metals. They are popular in jobbing foundries and die casting shops because they are easy to tap and charge with another alloy. There is no direct impingement of the flame on the metal, and the heat loss to the outside is limited by the refractory walls.[13] However, the energy efficiency of the crucible furnace is low at 7 to 19%, with over 60% of the heat loss attributed to radiation. The life of the crucible furnace is short and temperature control is difficult.

Source: Case Western Reserve University

Exhibit 8: Radiant panel installed in gas crucible furnace

Radiant energy transmission in a gas crucible furnace can be minimized by installing a radiant panel lining,[14] which combines a dense, high-alumina radiant panel with low thermal mass insulation back-up material. The radiant panels incorporate a series of raised nodules (Exhibit 8). This design creates a high surface area that promotes radiant energy transfer to the outer surface of the crucible. Backing up the non-insulating radiant panel with low thermal conductivity refractory insulation products allows the outside surface of the furnace to stay cooler, reducing heat loss through the sides of the furnace and increasing the efficiency of the furnace. The pre-fired radiant panels do not require mixing or drying-out period as in castable linings, nor do they require forms to be placed and removed. It is estimated that the technology can improve crucible furnace efficiency by 30% and improve the melt rates. A benchmarking study by Case Western Reserve University is currently underway to substantiate these claims.

4.1.2 Cupola Furnaces

The cupola furnace is a vertical shaft furnace used primarily for melting cast iron (Exhibit 9). It is similar in principle (except in scale) to the blast furnace used for chemically reducing metal oxides in the production of iron, zinc and lead. Typically, cupola melting is used in large tonnage foundries (e.g., plants producing cast iron pipes or automotive parts). In fact, 60% of iron casting tonnage is melted in a cupola. The cupola is ideal for melting cast iron because the molten droplets of metal directly contact the coke and flux during their descent, saturating the liquid iron with carbon and refining the metal product. This structure allows the cupola to melt nearly almost all ferrous scrap. The energy efficiency of cupola melting ranges from 40 to over 70%. Although the concept of cupola melting has not changed in recent years, best practices include many new technologies to improve energy efficiency and productivity.

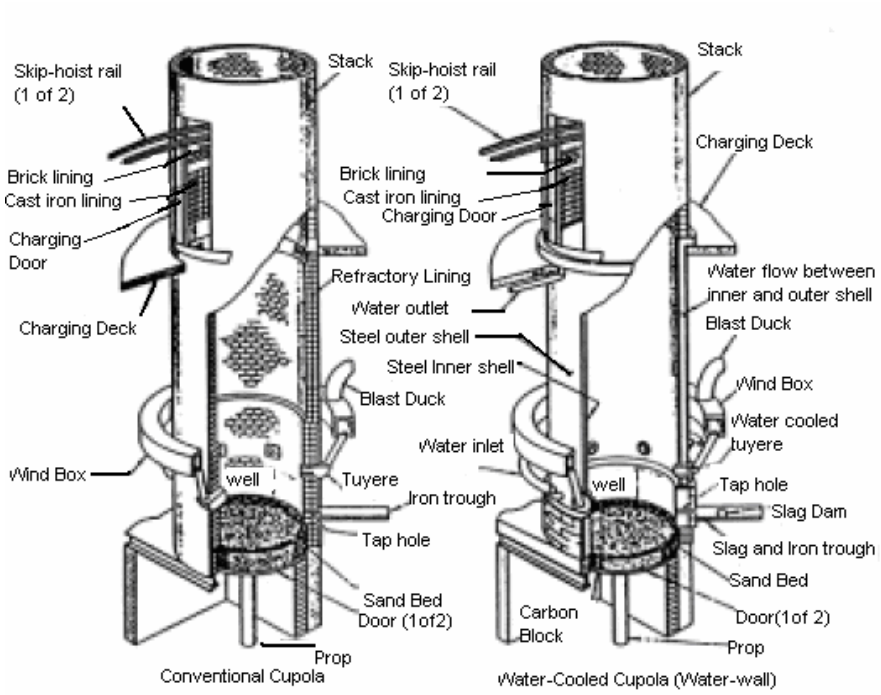

Source: Metals Handbook by ASM International (pg. 753)

Exhibit 9: Sectional view of conventional (non-water cooled) & water-cooled cupolas

(The conventional type is refractory lined. Water-cooled types incorporate either an enclosed jacket or an open cascade flow.)

The potential areas of improvement in cupola melting are as follows.

Refractories: Solid materials charged into the top of the cupola slowly move downward as the heat melts the charge. This movement creates abrasive conditions which wears the refractories rapidly. The conventional designs of cupolas used refractory-lined shells and were typically limited to short periods of operation (~1 week) before requiring refractory relining or repairing/maintenance. Water-cooled cupolas use a steel internal surface with little to no refractory materials, reducing maintenance and extending the continuous operating time to over two weeks. However, water cooling results in significantly greater energy losses requiring higher charge rates of coke per ton of iron produced. This problem has led to improved designs using a smaller volume of water on the outside of the shell in addition to a thin refractory lining. The steep temperature gradient on the inside cupola wall maintains a thin layer of refractory throughout the melting campaign. The aggressive melting conditions in modern cupolas has resulted in the development of new cement castables and spray monolithic linings (requiring no forms) which provide superior properties in terms of wear, heat transfer, and ease of installation and repair.[15]

Air Blast Preheating: Hot blast operations offer several advantages like energy savings, lower sulfur pick-up, and higher carbon pick-up. However, these benefits are substantially reduced if the blast air temperature is below 400°C (750°F). Therefore, secondary gas/oil firing is often used to supplement recuperative waste gas systems to produce high-temperature blast air consistently. Some new cupola installations with efficient off-gas combustion systems (which utilize the energy associated with CO emissions) and waste heat recuperators preheat the hot

blast air up to 650°C (1,200°F).[16] Also, some plants dehumidify the hot blast air as it reduces the rate of coke consumption.

Oxygen Enrichment of Blast: Plants using oxygen enrichment typically add oxygen at volumetric flow rates of 2 to 20% of the blast air to increase the temperature and the melt rate. Oxygen is usually introduced at the tuyere level of the cupola. Oxygen enrichment is common in the United States and Europe, especially in large cupolas. However, the process is not widely used in smaller shops because oxygen enrichment is difficult to justify in terms of cost (of oxygen).

Supplemental Energy: Although coke is the main source of energy for cupola melting, the use of supplemental energy is a promising way for improving energy and operational efficiency of cupola melting. Oxygen-fuel burners with dust injection systems provide a method of recycling plant-generated residues (cupola dust, finishing dust, and sand reclamation dust) while increasing the cupola volume for melting, leading to better energy efficiency.[17] Injection of powdered alloying materials also provides a method of quickly adjusting the iron chemistry.

Intelligent Control: The harsh interior of the cupola has made it difficult to introduce the sensors required to measure and control process variables. Therefore, many cupolas are operated in open-loop mode. Recently, computer models have become available, including neural network models, to provide rapid estimates of process variables for use in automated control schemes. Computer control of the cupola process lowers material and processing costs, reduces scrap and improves quality.

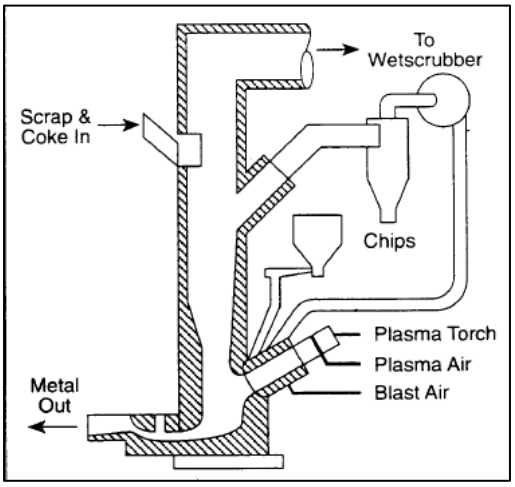

Center for Material Production

Exhibit 10: Plasma cupola

Plasma-Fired Cupola: This technology was developed by Westinghouse Electric Corporation with participation from several major U.S. foundries.[18] As shown in Exhibit 10, a plasma torch is installed in the tuyere zone of the cupola where blast air is supplied and mixed with the plasma torch flow in a special mixing chamber. This arrangement is reported to increase productivity (up to 60%) from decoupling of the combustion process and total heat input to the cupola. Air blast velocity and penetration can be lower due to the high-energy output of the plasma torch, resulting in lower cost of air pollution control and less dependency on premium quality coke. Smaller-sized anthracite coal can be used without a negative effect on the melt rate or the composition. Since the conditions in the furnace are less reducing, charge material can be very thin and include materials such as cast iron borings without oxidation loss of silicon. A commercial-scale plasma cupola was built with 1.5 MW plasma torch in each of the six tuyeres at General Motors' Powertrain Plant in Defiance, Ohio.[19] This plant demonstrated that a plasma-fired cupola could be operated economically and melt up to 75% iron borings.

Cokeless Cupola: Iron is melted in this cupola using fuels such as natural gas, propane, diesel oil or pulverized coal in place of coke. Although invented over 30 years ago, only a few large foundries in Europe and India have adopted the technology. A water-cooled grate supports specially developed refractory spheres, which act as heat exchangers in a cokeless cupola (Exhibit 11). Below the grate are burners, which are operated to impart partially reducing conditions inside the cupola to reduce oxidation losses. The hot gases from the burners maintain the bed of spheres at high temperature, and preheat and melt the scrap in the shaft. The metal is superheated in passing through the bed and is then collected in the well prior to tapping. A carburizer is continually injected into the well to give the correct carbon analysis. Elimination of coke decreases the CO content in the waste gas to 1%, indicating more efficient energy use when compared with the 12 to 20% CO emission typical in a conventional cupola. Use of cokeless cupolas simplifies the emission control system and results in lower sulfur content in metal and reduced slag production.

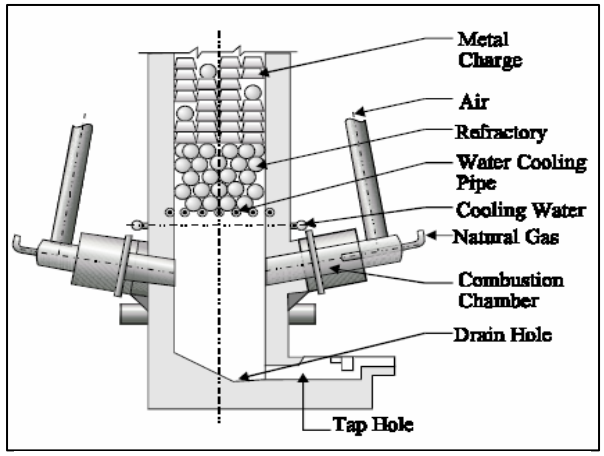

Source: DOE, EERE Energy Environmental Profile of the U.S. Metal Casting Industry

Exhibit 11: Cokeless gas-melting cupola

Cokeless cupolas are typically operated at relatively low tapping temperatures of about 1,400°C (2,550°F) to extend the refractory life, followed by superheating and re-carburization in an electric furnace. Cokeless cupolas duplexing through electric furnaces are presently in use in Germany, Spain, Japan, Austria, and Korea. In terms of energy efficiency, a typical cold blast cupola averaging 12% coke consumption and 1,450°C (2,640°F) tap temperature effectively utilizes 40% of the energy input while a cokeless cupola with natural gas consumption of 50 Nm^3/t (1,770Nft^3/t) and an iron temperature of 1,380°C (2,520°F) utilizes 72% of the available energy.[20]

4.1.3 Electric Arc Furnaces

Steel automobile shredded scrap with high residual elements and virgin iron raw materials, such as direct reduced iron, are difficult to melt efficiently in a cupola or coreless induction furnace. Cupola melting requires clean steel scrap and coke, materials that are becoming increasingly scarce and expensive. Electric arc furnaces are well suited for these purposes. Almost 87% of the electric arc furnaces are used to melt steel (or iron and steel) and 13% to melt iron.[21]

Electric arc furnace uses electrodes that are lowered to strike an arc on the cold scrap; the electrical system automatically controls the level of the electrode, lifting and lowering each individual electrode according to the electrical settings. The arc provides heat by radiation and current resistance (through the metal) to melt the scrap.[22] An intrinsic advantage of electrical heating is the lower metal loss.

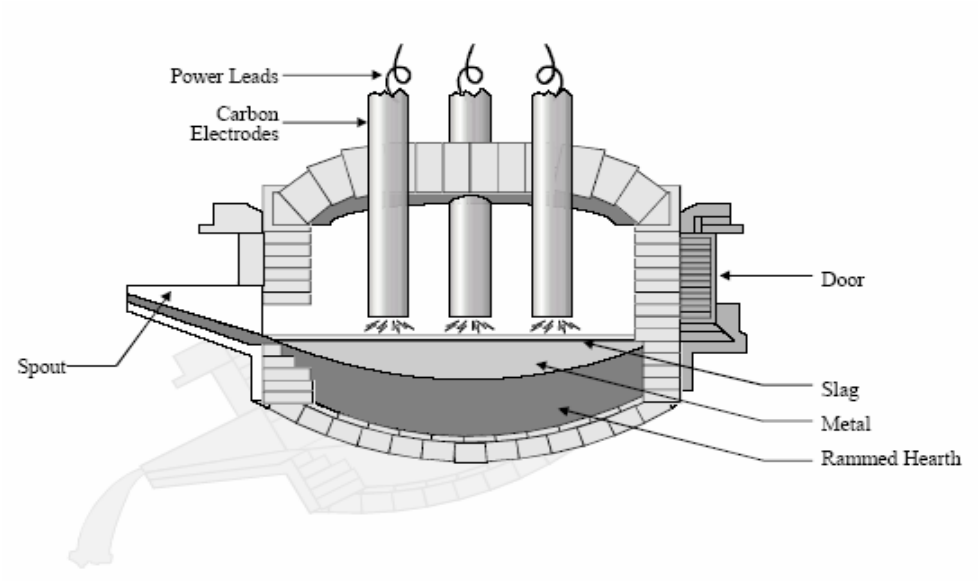

Source: DOE, EERE Energy Environmental Profile of the U.S. Metal Casting Industry

Exhibit 12: Electric arc furnace

Nearly all furnaces are three-phase AC direct arc with three electrodes in a dome-shaped refractory roof (Exhibit 12). The hearth and sidewalls are typically lined with bricks, monolithic materials, or a combination of both. Acid refractories (silica-based), basic refractories (magnesite-based), and in some cases, neutral refractories (alumina-based) are used to line the furnace sidewalls, hearth, and roof. All major additions are made to the furnace through the roof by swinging the roof out of the way and charging scrap, fluxes, and carbon from loaded buckets.

Most foundry steel is melted in electric arc furnaces. Energy losses from the surface of the bath are large due to the large surface area to volume ratio of the furnace resulting in significant energy losses during delays in the operation. In addition, the large surface area of the furnace results in large losses through the refractory walls, hearth, and roof. Nearly all steel foundries blow oxygen into the bath after most of the scrap is melted which generates "chemical energy" from exothermic decarburization, assisting in the melting process. Some operations use additional sources of chemical energy to decrease tap-to-tap time.

The first continuous submerged direct current electric arc (Contiarc) furnace for melting iron was installed by American Cast Iron Pipe Company (ACIPCO) in July 2001. The key to the electric arc furnace's molten iron production is that it can tap, charge, and arc continuously and simultaneously. As a result, the power does not need to be turned off to tap or charge the furnace. The submerged arc design and the continuous nature of the furnace operation make it more energy efficient than the cupola. In addition, the furnace can either take low-grade steel scrap, direct reduced iron and/or hot briquette iron and combine it with coal and silica to melt steel or smelt iron in the same furnace system, producing 80 ton/hour.

4.1.4 Immersion Heaters (Low-Temperature Melting)

Immersion furnaces or heaters are currently used for low-temperature melting of zinc. The heat is generated by combustion or electrical resistance inside a tube submerged in molten material (Exhibit 13). The heat is efficiently transmitted to the molten material through the wall of the tube by conduction. Combustion gases are never exposed to the molten metal, reducing oxidation losses and enhancing heat transfer to the molten metal.[23] The efficiency of a zinc immersion furnace is high at 63 to 67%[24] and provides melting rates of up to 1,600 lbs/hr.

Source: Metals Processing Advisor
www.energysolutionscenter.org

Exhibit 13: Immersion heater

Immersion heat tubes are typically made of metallic materials that have high thermal conductivity and are coated with ceramic or cement materials to resist corrosive attack by the molten metal. When melting aluminum or other higher-temperature-melting materials, heavier ceramic coatings are applied because these molten materials act more aggressively on the tubes. The ceramic coatings, however, act as a thermal barrier and lower the productivity of the immersion heater. The mechanical demands on ceramic-coated metallic tubes are also very high. These tubes must be structurally strong to survive in an industrial environment and must be able to operate under frequent thermal cycling. A small crack in the coating can lead to rapid destruction of the tube and lost productivity. Higher-temperature melting furnaces utilizing immersion tubes are still considered experimental, and efforts have been made to develop more robust and protective tubes (see section 4.2.2).

4.1.5 Induction Furnaces

Induction furnaces have increased in capacity to where modern high-power-density induction furnaces are competing successfully with cupola melting (Exhibit 14). There are fewer chemical reactions to manage in induction furnaces than in cupola furnaces, making it easier to achieve melt composition. However, induction melting is more sensitive to quality of charge materials when compared to cupola or electric arc furnace, limiting the types of scrap that can be melted. The inherent induction stirring provides excellent metal homogeneity. Induction melting produces a fraction of the fumes that result from melting in an electric arc furnace (heavy metal fumes and particulate emissions) or cupola (wide range of undesirable gaseous and particulate emissions as a result of the less restrictive charge materials).[25]

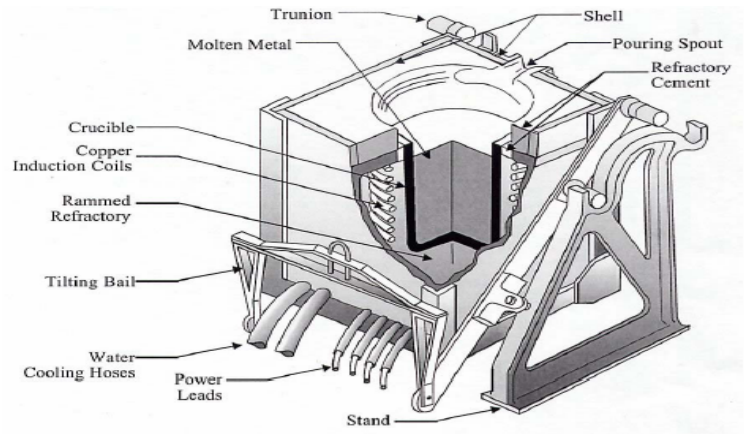

Source: DOE, EERE Energy Environmental Profile of the U.S. Metal Casting Industry

Exhibit 14: Schematic of induction furnace

A new generation of industrial induction melting furnaces has been developed during the last 25 years.[26,27,28,29] The development of flexible, constant power-tracking, medium-frequency induction power supplies has resulted in the widespread use of the batch melting methods in modern foundries. The batch-melting furnace empties the furnace after each cycle, reducing the power required for holding. These power units incorporate heavy-duty silicon-controlled rectifiers that are able to generate both the frequency and the amperage needed for batch melting and are able to achieve electrical efficiency levels exceeding 97%, a substantial improvement over the 85% efficiency typical of induction power supplies of the 1970s. The new designs allow maximum utilization of furnace power throughout the melting cycle with good control of stirring. Some of the largest commercial units are capable of melting at nearly 60 tons per hour and small furnaces with very high power densities of 700 to 1,000 kWh/ton can now melt a cold charge in 30 to 35 minutes.

These newer power supplies improve the overall melting efficiency and furnace production at lower operation and fixed costs. Electrical efficiency is improved by the higher electrical resistance of the solid charge material compared with that of the molten metal. Melting in batches without a liquid heel allows for melting of lower-quality (less expensive) scraps containing moisture or oil residues without having to dry them first. At the same time, refractory materials in linings have improved due to new materials and reduced average thermal stress.[30] Induction furnaces have benefited from improvements in the following areas:

Scrap Charging Systems: Scrap sorting and charging systems that achieve higher density charges show increase in efficiency through increase in coil efficiency and shortening of melting time. Furnace loading time has been shortened by utilizing special vibrating conveyor systems designed to directly feed scrap into the furnace during melting. Melting time is reduced by preheating the charge before loading to remove moisture and residual oil.

Furnace Designs: Newer furnaces with more efficient and larger power supplies (kWh capacity per ton) reduce energy consumption. Dual-output power supplies, increasing the production and efficiency of a single power supply, have been shown to be effective in melting steel. In addition, new high power density furnaces have been designed with heavy copper tubing, rigid structural

elements, advanced coil insulation, and noise reduction. Wide-bodied furnaces for large capacity operations allow loading of larger scrap and give better access for slag removal.

Furnace Covers: The use of furnace cover is critical to energy efficiency once the metal is molten. The simplest system is to keep a slag on the molten metal, reducing radiation losses from the top surface. Higher efficiency systems include furnace lids constructed from refractories or ceramics with low thermal conductivity, which reduces conduction and radiation heat losses.

Harmonics Controls: Harmonics problem, or feedback of electrical equipment on the power source, can be caused by the high power of the furnace power supplies. These power interface problems include low-power factor, high-frequency harmonics, line voltage notching, and inter-harmonic distortions. Special technologies and equipments have been developed to minimize the negative influence of induction furnaces on the power supply. Computerized controls and diagnostic systems are available to provide close control of the melting operation and reduce the chances of accidental overheating. A typical control system uses information from load cells for the weight of the furnace charge and thermocouple readings for melt control optimization.

Multiple-Output Power Supplies: Dual-output or "butterfly" operations utilize a single power supply and two furnaces with mechanized or electronic switching. This results in continuous and completely controllable power to two furnaces at the same time. Recently, multiple-output power units with three or more outputs have been developed. These new systems are designed with capacitive furnace isolation and include one or two AC rectifiers. Such systems are capable of achieving the high volumes of metal production previously possible only with cupolas.

Refractories: Push-out lining systems use a large plug to quickly remove the old lining for easy disposal. This system reduces time and cost for periodic lining changes, lowers refractory dust, and is less likely to damage back-up lining than manual refractory removal.[31] In addition, lining life has been improved to nearly 400 heats by optimizing melt parameters, lining compositions, lining installation techniques and sintering procedures.[32]One of the major technical hurdles to operating induction furnaces for extended periods is chemical erosion of the silica linings, one of the main causes of lining failure.

4.1.6 Reverberatory Furnaces

Reverberatory furnaces melt aluminum with the heat that re-radiates from the hot refractory heated by the burners mounted in the roof or in a sidewall of the furnace, as shown in Exhibit 15. The molten metal is held inside the furnace at the required temperature before it is tapped out for pouring or transferred to a holding furnace.

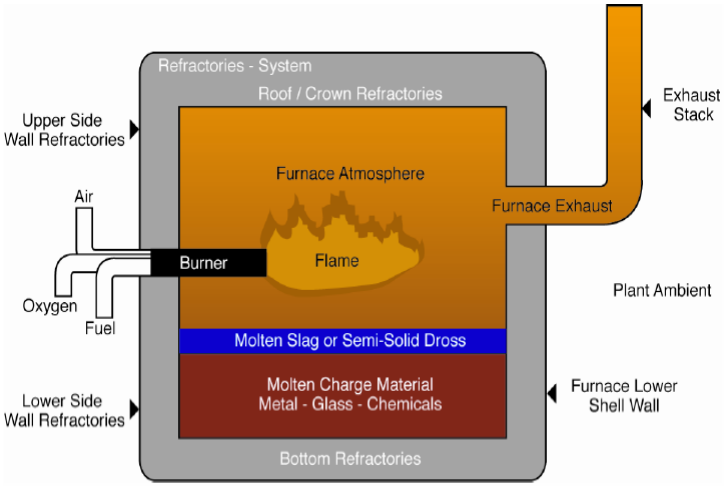

Exhibit 15: Reverberatory furnace schematic[33]

Gas reverberatory furnaces are commonly used in large nonferrous casting foundries as they provide a large reservoir of molten metal, ensuring a steady and reliable supply of molten metal to the shop. For this reason, many large- and medium-sized shops use them as central melters to supply multiple operations located within the shop. Typical capacity of the furnace can range widely from 1 to 75,000 tons. The advantages of reverberatory furnaces reside in high-volume processing rates and low maintenance costs.

There are two types of gas reverberatory furnace based on whether the sows, ingots, and revert materials are preheated before melting or not. A dry hearth reverberatory charges and preheats sows, ingots, and revert materials on a slope between the charging door and the molten metal bath, removing any contamination or water residue prior to melting, preventing splashing or explosions. A wet bath reverberatory directly dumps the sows, ingots, and reverts into the molten metal bath. The wet bath system is beneficial for melting scrap types with large surface to volume ratios, which may oxidize excessively unless melted quickly.

Another type is a side-well reverberatory furnace that consists of a number of burners firing inside the hearth, against the furnace's hot wall or door. A charging well and a pump well are attached to the furnace's hot wall on the outside of the furnace. Both wells are connected to each other and with the furnace hearth by arches, which permit aluminum circulation between the furnace chambers.[34] During the charging period of the furnace cycle, molten aluminum circulates through the charge well where it melts the scrap, then circulates back into the hearth for reheating. Charging continues until the molten bath reaches the desired level. Subsequent steps in the smelting process may include degassing and alloying.

Although the reverberatory furnace has the advantages of large supply of molten metal, it has low energy efficiency, high oxidation rate, and large floor space requirement. The energy efficiency of the reverberatory furnaces ranges from 20 to 25%. Energy is mainly lost through the hot flue gases. In addition, as the molten metal comes in contact with the furnace gases, it forms slag/dross. The melt loss rate is 3 to 5% in aluminum gas reverberatory operations.[35] Improvements in burner technology, fuel/air ratio control, insulating refractories, and temperature control have contributed to a slow but steady improvement in the efficiency of

reverberatory furnace. Energy benefits from refractories in reverberatory furnace alone could save up to 78 trillion Btu per year.[36]

4.1.7 Rotary Furnaces

Rotary furnaces are an alternative for all small- and mid-sized foundries using cupola furnaces or induction furnaces.[37] They are more efficient than reverb furnaces, transferring heat via both radiation and direct contact between the melt and the refractory as the heat passes beneath the charge (Exhibit 16).

SECO/WARWICK Corporation

Exhibit 16: Rotary furnace

The air/fuel rotary furnaces that were used to melt iron, lead, brass and aluminum have almost disappeared in the foundry industry because they had low melting rates and were difficult to control the temperature and quality. However, in the last decade, a new generation of rotary furnaces has been introduced which are fully automated and include a tilting mechanism for the furnace.[38] The ability of the furnace to tilt minimizes the amount of time spent on non-melting operations such as charging, tapping, drossing off and cleaning. As compared to the old type, the new generation of rotary furnaces uses oxygen to combust the fuel. Higher melting rates, reduced emissions, consistent metal composition and lower fuel consumption are achieved with this furnace because the hot refractory rotates to transfer more heat to the charge/bath via direct contact. (Direct-charging oily scrap can further reduce effective Btu/lb requirements in rotary furnaces due to the combustion of the evolved hydrocarbons.) Other advantages of the system are its minimal space requirement, ease of operation, and simplicity to maintain.

A properly designed door and control system enable more efficient furnace operation by monitoring flue gas emissions, temperature, and furnace rotation parameters. Adding a door and control system to an oxy-fuel double-pass rotary furnace often increases production by 15%. Other advantages of a properly designed door include radiation heat loss reduced by almost 1

million Btu/hr, better control of free oxygen from elimination of air entrainment, reduced dusting and noise, and improved fuel efficiency of up to 20%. These benefits can cut processing cost by a further 10% compared to furnaces without a door.[39]

4.1.8 Stack Furnaces

The stack furnaces are receiving more attention in recent years due to their higher energy efficiency than of the reverberatory furnaces. It can be considered as a modified reverberatory where its efficiency is improved by better sealing of the furnace and the use of the flue gases to preheat the charge materials. The charge materials slide down the shaft and reach the melting zone where they are melted by the burners, and the molten metal flows down to the holding area (Exhibit 17). The hot exhaust gases from the melting zone flow through the shaft to preheat the incoming charge, improving the energy efficiency of the stack furnace by 40 to 50%.

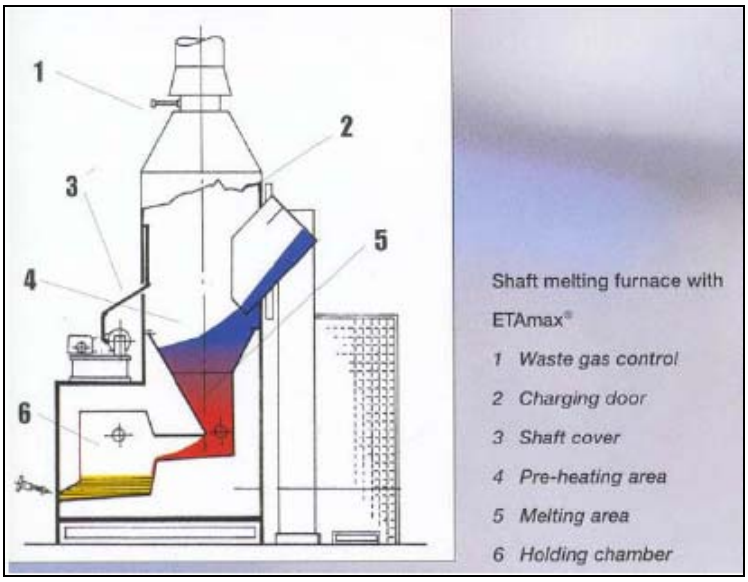

Source: Case Western Reserve University

Exhibit 17: Schematic of stack furnace

The disadvantage of the stack furnace is that due to the charging mechanism, the height of the stack furnace has to be more than 20 feet.[40] In addition, as the furnace is charged from the top of the shaft, the refractories at the bottom of the charging door are subjected to repeated impact and wear. This requires additional maintenance. The stack furnace can be coupled with other melting systems to improve its efficiency. For example, it can be used with a crucible furnace, reducing its melt losses since the crucible melts by indirect heat to the metal through the wall of the furnace.

4.2 Experimental Melting Furnaces

Several innovative melting technologies are being currently experimented world over, each with its advantages and barriers that are keeping it from wide commercial applicability. Exhibit 18 lists these technologies with their current capacities.

Experimental Melting Technologies	Capacities
Electron Beam Melting	100 to 3,000 kW power melting cast ingots of sizes up to 10 ton for steel, 2-5 ton for titanium, up to 2 ton for zirconium, and 5 ton for niobium, tantalum and molybdenum[41]
Immersion Heater (High-Temperature Melting)	70,000 Btu/hr-ft^2 in Isothermal Melting Process (ITM); melt rate of 2.5-3.75 tons/hr[42]
Infrared Heating	Heating at 50-400°C/sec (120-750°F/sec)
Microwave Melting	Melting one to hundreds of pounds of titanium, aluminum, gold, or silver at a rate of 1 ton/hr (still under development)[43]
Plasma Heating	Melting 4,000 tons per year at 5,100 kWh[44]
Solar Furnace	Melting temperature up to 33,000°C (60,000°F) and producing over 1,000 kWh of energy

Exhibit 18: Experimental melting technologies and their capacities

4.2.1 Electron Beam Melting (EBM)

EBM furnaces melt the metal by focusing a beam of electrons from an electron gun on the metal. When the electrons strike the material, their energy is absorbed in quantities sufficient to melt the metal. EBM method was first introduced in 1907 to melt high-melting-point metals, such as tantalum and tungsten. It was not until recently that electron beam was recognized for its application in metal-purifying processes. This is the principal technology for processing of reactive metal scrap. EB technology is also the only technology that makes it possible to monitor the cleanliness of metals using specially designed button melters.

There are two processes used today: drip melting and electron beam cold-hearth refining (EBCHR). Drip melting melts the metal in a water-cooled ingot mold enabling removal of entrapped gases and evaporation of all impurities as their vapor pressures exceed that of the metal being processed. In EBCHR, the molten metal flows along a water-cooled hearth before entering a water-cooled ingot (Exhibit 19). While flowing along the hearth, high- and low-density inclusions are removed in addition to evaporative purification. High-density inclusions settle and are removed in the scull, while lighter inclusions either are dissolved in the metal or held back by a dam prior to flowing into the ingot.

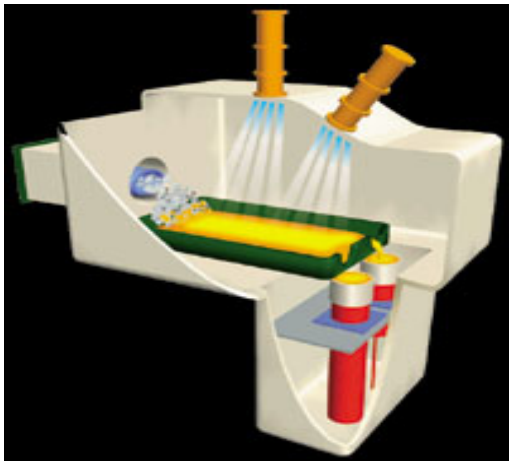

Source: http://www.timet.com/naops/vebchrmelt.html

Exhibit 19: Electron Beam Cold-Hearth Refining

EBM is distinguished by its refining capacity. However, electron beam technology is primarily for melting refractory metals and laboratory-scale melts. One of the disadvantages of the electron beam process is its high capital cost due to its requirement of vacuum pumps. In addition, the fit up must be precise and locating the parts with respect to the beam must be perfect.[45] Therefore, the technology is not applicable in typical foundry operations.

4.2.2 Immersion Heaters (High-Temperature Melting)

Immersion heaters, although well established for melting zinc, is currently not well-adapted for melting metals with higher melting points. The protective ceramic coatings pose thermal barrier, lowering the melting efficiency. Several ITP Metal Casting projects are currently focusing on enabling this technology commercially.

One ITP-sponsored project addresses the critical need for advanced materials that are lighter, stronger, and more corrosion-resistant than metals.[46] Work has been done to optimize the nitride-bonded, silicon-carbide-fiber-reinforced Continuous Fiber Ceramic Composite (CFCC) immersion tube burners for application in aluminum and other light metal melting. The project validated that CFCC materials are stable in molten aluminum and in combustion gas for long periods. When tested at an industrial site, the immersion tube survived over 1,000 hours and 31 cycles in an aluminum casting furnace. In another testing, the immersion tube successfully survived for 1,752 hours in the furnace.

ITP has also been supporting research effort in the development of intermetallic alloys that possess improved or unique environmental resistance, which can result in efficiency benefits and energy savings.[47] Recently, researchers developed Ni_3Al alloy that can withstand service temperatures of 100 to 150°C (180-270°F) higher than commercial Ni_3Al alloys. Other alloys under study are based on the intermetallic alloy FeAl. These alloys can resist carburization and sulfidation that most commercial alloys cannot. In addition, alloys based on Ni_3Si are being developed. The Ni_3Si alloys have good mechanical properties and excellent resistance to oxidizing conditions, such as in sulfuric acid and seawater, and to ammonia at temperatures up to 900°C (1,650°F). These kinds of intermetallic alloys can be applied in immersion heater tubes to withstand any wear from chemical reactions.

An ITP cost-shared project called "Isothermal Melting (ITM)" shows promise for developing future models with in-plant thermal efficiencies of 97%. New materials and construction techniques allow immersion heaters to be built with high heat flux (approximately 70,000 Btu/hr-ft^2) and external coatings that provide mechanical and chemical protection. These new heater designs are based on a highly conductive, impact- resistant ceramic coating on a metallic sheath and a highly thermally conductive, dielectric integral coupling medium between the sheath and the heat-producing element. This allows heat transfer by conduction to be the dominant mode, rather than particle-to-particle radiation heat transfer that prevails in conventional electric immersion heaters with compacted powder coupling media. The composite refractory coating is resistant to corrosive attack by the molten aluminum, yet sufficiently thin enough to provide a high heat flux. High flux heaters incorporated into the ITM are practical for large-scale applications.[48]

Another project sponsored by the ITP Metal Casting is developing integrated retrofit technologies for clean aluminum melting systems by focusing on immersion heating coupled with metal circulation systems.[49] This is being achieved through substitution of conventional radiant burner method with immersion heating in reverberatory furnaces. The program will enable cost-effective retrofits to a range of existing furnace sizes, reducing economic barrier to implementing new applications.

4.2.3 Infrared Heating

Infrared heating is currently being employed by the forging industry; this technology can also be used for die heating and heat treatment in the metal casting industry. It offers a method for reducing time and energy costs of die preheating. A study conducted by ORNL indicated that the surface of the die can be heated to 300°C (572°F) in less than 20 minutes.[50] An infrared panel heater can bring the furnace to full power in a matter of seconds, saving energy to maintain a hot furnace while idle (Exhibit 20).[51] The rapid heating could also reduce heat-treatment cycle time and increase product throughput.

Infrared radiation is often supplied by high-intensity quartz heat lamps, producing radiation of around 1 micron wavelength. This radiation melts metals with uniform heat distribution. The high-density infrared technology can achieve a heating rate of 50 to 400°C/sec (120 to 750°F/sec).[52]

Source: Oak Ridge National Laboratory

Exhibit 20: Electric infrared flatbed furnace
(used for both laboratory and industrial testing)

Recently, DOE funded a study on surface treatments on refractories used in aluminum processing.[53] High-density infrared processing will be used to apply corrosion-resistant, high emissivity coatings on refractories so as to reduce its porosity.

4.2.4 Microwave Melting

Originally developed by the DOE's Y-12 National Security Complex for melting of uranium, microwave technology is now capable of melting a wide range of alloys in large quantities.[54] While conventional heating involves transferring of heat through the outer surface of the material to the interior, microwaves can penetrate the mass, enabling rapid transfer of high-intensity heat throughout the bulk. This translates into significant savings in time and energy.

Three basic elements are required to heat and melt bulk metals using microwaves: a multimode microwave cavity, a microwave-absorbing ceramic crucible, and a thermally insulating casket that is microwave-transparent. Although metal is supposed to reflect microwaves, researchers at Y-12 and Pennsylvania State University found that metal actually starts to absorb the energy and heat at three-fourths of the melting temperature.[55] A uniquely designed suscepting crucible used for microwave melting is shown in Exhibit 21.[56] The metal charge is placed in an open (no lid) ceramic crucible, and the insulating casket is positioned to cover the open crucible completely. The heated crucible walls quickly heat the metal charged in the crucible by means of radiation, conduction, and convection. The thermally insulating casket increases the energy efficiency of the microwave system by trapping the heat generated in the crucible. According to a Y-12 publication, microwave melting could cut melting cost by 30%. Germany and Japan are taking a strong lead in the microwave technology applications in high-temperature processes and microwave-assisted kilns/furnaces.

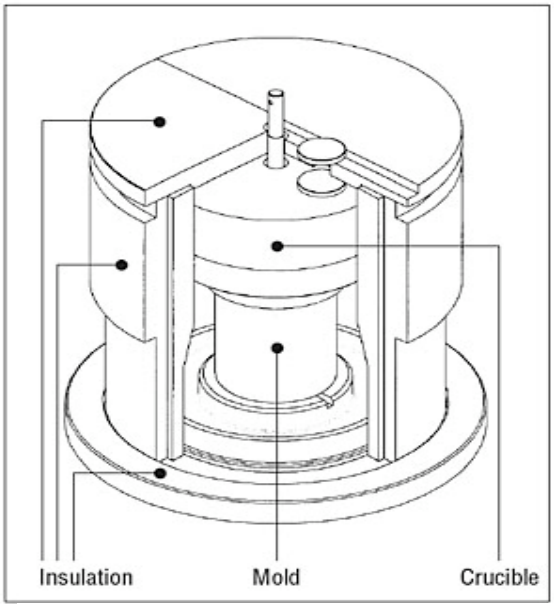

Source: Y-12 National Security Complex

Exhibit 21: Suscepting crucible

Some of the current focus areas in microwave melting technology include use of microwaves for roasting ores, heat-treating glass, detoxifying filter dusts and slag in the metal industry, and decontaminating asbestos containing wastes.[57] In addition, research is being conducted by Michigan Technological University using a combination of microwave, electric arc and exothermic reactions to heat and smelt iron.[58] Since iron ore and carbon are excellent microwave absorbers, microwave technologies can aid more effective melting in electric arc furnaces used in steel foundries.

However, bulk metals do not readily couple directly with microwave energy at room temperature because they are electrically conductive, readily reflecting the incident energy.[59] In addition, microwave melting requires 2.35 micron radiation which is very expensive. This limits the use of microwave melting to high-end processes and alloys such as investment casting and super alloys.

4.2.5 Plasma Heating

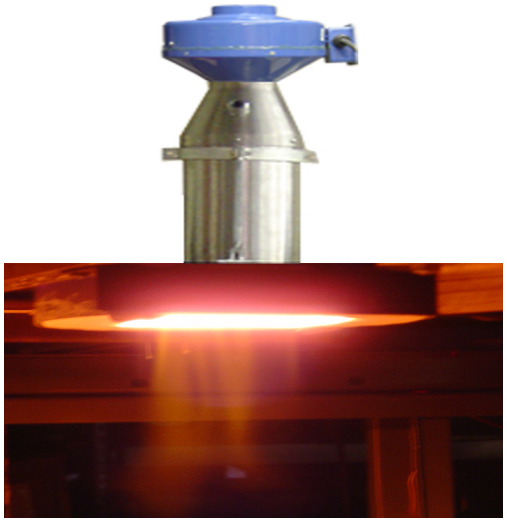

Exhibit 22: Plasma heating

Plasmas are gaseous collections of electrically charged particles such as electrons and protons. These charged particles carry energy; as the ionized plasma flow hits the metal surface, it releases its energy melting the metal.

The plasma melting process is proved to be more energy efficient than the conventional melting technologies as it can raise the temperature very rapidly (Exhibit 22). Plasma aluminum melting furnaces are reported to impart heat 60% quicker than the conventional high rate melters. Due to the fast heat transfer, the melting process is also rapid. The energy consumption rate is as low as 0.198 kWh/lb (of aluminum) compared to 0.345 kWh/lb (of aluminum) in induction melting.[60]

The plasma melting process also minimizes metal loss due to oxidation and contamination. The plasma keeps a thin oxide film on molten metal intact, protecting the molten metal from absorbing gases. In fact, the dross rate of melting aluminum is lowered to less than 1% compared to the conventional 3 to 12%.[61] Plasma heating also reduces the cost of fuel. A recent development of plasma heating utilizes ambient air and converts it to nitrogen, eliminating the need to purchase expensive gases such as nitrogen or argon required in conventional plasma heating.

4.2.6 Solar Furnaces

Solar furnaces use large arrays of mirrors to concentrate the sun's energy into a small space and produce high heat flux and very high temperatures (Exhibit 23). They can achieve temperatures up to 33,000°C (60,000°F) and produce over 1,000 kWh of energy. Solar furnace system consists of a solar concentrator, featuring advanced structural mirrors, and system controls, which provide fully automated operation, fault detection, data acquisition, and communications. The sun-tracking mirrors concentrate sunlight onto a receiver that sits on top of a platform extended about 18 feet from the wall mirrors. The receiver collects and transfers the sun's heat to experimental equipment.

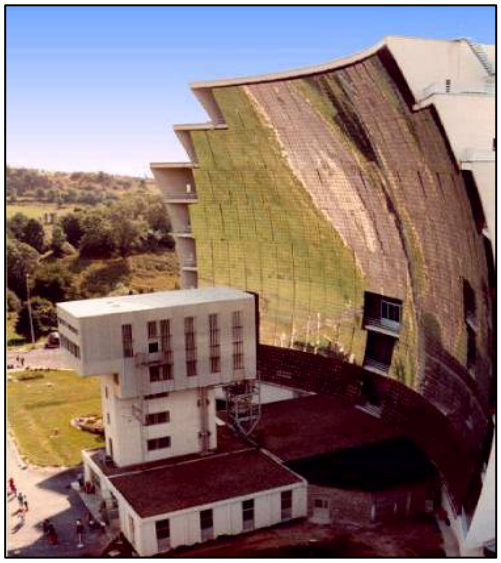

Source: The Institute for Material Science and Process Engineering (IMP)

Exhibit 23: Solar furnace

One aspect of the solar system that makes it appealing for electricity production at remote sites is its ability to operate automatically. Without operator intervention or even onsite human presence, it starts up each morning

at dawn and operates throughout the day, responding to clouds and wind as needed. Finally, it shuts itself down at sunset. The system can be monitored and controlled over the Internet.[62]

Although solar furnaces are the ideal metal melting systems in terms of energy efficiency, they are very capital intensive and operate only under a sunny sky. These furnaces also require acres of land to place the reflective mirrors. Because of these restrictions, solar furnace is used mainly for scientific experiments, lacking the practicality to be applicable immediately in typical foundry operations.

4.3 Heat Recovery Methods

Much of the heat produced in melting operation is lost to atmosphere. When this waste energy is re-used, it may save up to approximately 20%[63] of a facility's energy cost and, in some cases, reduce emissions. Waste-heat-recovery devices (recuperators, regenerators, shaft/stack melters, etc.) simply transfer thermal energy from the high-temperature effluent stream to a lower-temperature input stream (make-up air or metal charge). Waste-heat-conversion methods, such as absorption refrigeration, thermoelectrics and thermionics, utilize the elevated flue gas temperatures to drive energy conversion devices.

4.3.1 Recuperators

A recuperator is a gas-to-gas heat exchanger placed on the stack of the furnace (Exhibit 24). Heat recuperators recover heat from the exhaust gases and heat the incoming combustion air.[64] Recuperators are available in many sizes, configurations, and temperature ranges. All rely on tubes or plates to transfer heat from the outgoing exhaust gas to the incoming combustion air, while keeping the two streams from mixing.[65] Due to the continuous high-temperature process, recuperators must be protected against heat and may not be suitable for unclean, corrosive exhaust gases. Chlorine gas is frequently used to purify molten aluminum and its byproducts are very corrosive to a recuperator's materials.

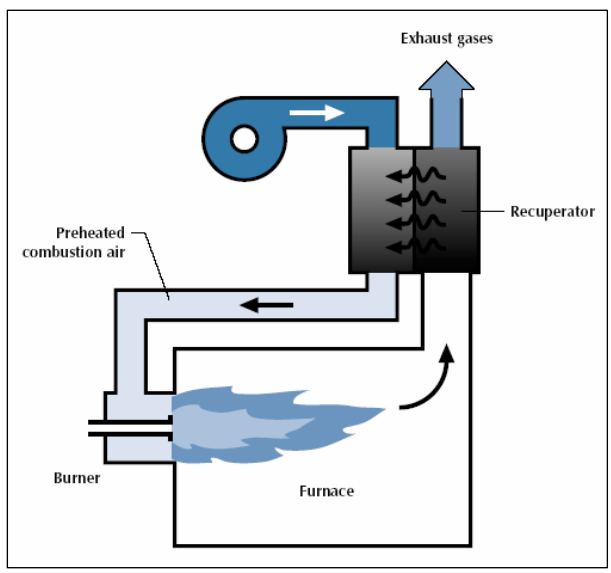

Exhibit 24: Schematic of a heat recuperator[66]

One of the most common recuperators is a metallic radiation recuperator, which consists of two concentric lengths of metal tubes. The inner tube carries hot exhaust gases that radiate heat to the inner wall of the recuperator, and the external tube carries the cooler gas to be heated.

A convective recuperator is another type of recuperator that circulates hot gases through several small-diameter pipes contained within a larger shell. The cooler gases pass over the pipes and absorb much of their heat.

A vertical tube-within-tube convective recuperator is an alternative arrangement of the convective recuperator where the cold combustion air is heated in a tank of parallel vertical tubes extending in to the path of flue gas stream. The tube is easy to replace during full operation, minimizing cost, inconvenience, and equipment damage from forced shutdowns in case of recuperator failures.[67]

4.3.2 Refrigeration

Absorption chillers use heat instead of mechanical energy to provide cooling for applications such as air conditioning. They transfer their thermal energy from the heat source to the heat sink through an absorbent fluid and a refrigerant. The two most common refrigerant/absorbent mixtures used in absorption chillers are water/lithium bromide and ammonia/water. The absorption chiller creates refrigerating effect by absorbing and then releasing water vapor into and out of a refrigerant solution (Exhibit 25).[68]

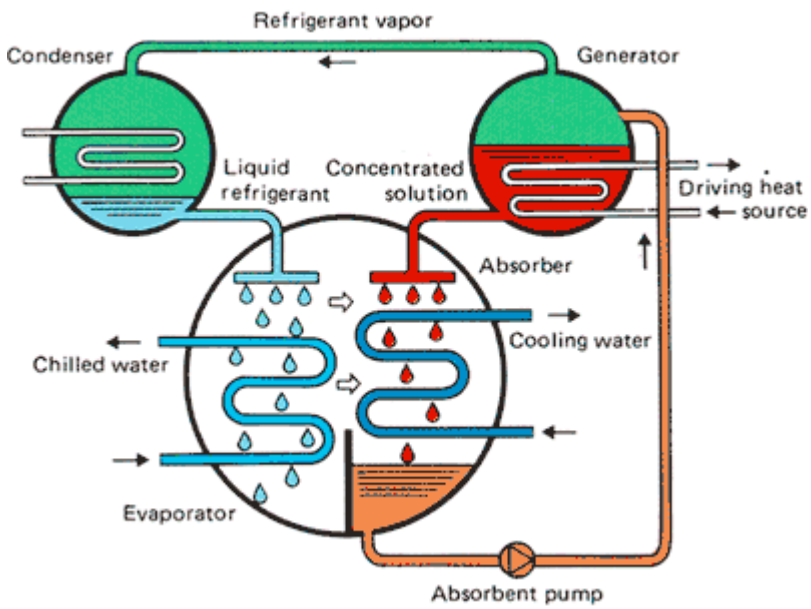

Source: Gulf Coast CHP Application Center

Exhibit 25: Simplified absorption cycle

Absorption chillers are economically attractive because they utilize inexpensive thermal energy (waste heat). Mechanical chillers must be driven by motor or engine; however, absorption chillers primarily use low-grade waste heat at a temperature between 100°C and 200°C (212°F and 392°F). These chillers can change a building's thermal and electric energy and cost profile by shifting cooling needs from an electric load to a waste-heat thermal load.

4.3.3 Regenerators

A regenerator is a container that is capable of absorbing and storing large amount of thermal energy. It is charged with the hot exhaust gas during the melting operation cycle; when the regenerator is fully charged, it stops the flow of the exhaust gas and starts allowing in

combustion air to pass through the regenerator. The combustion air then enters the furnace with increased temperature.

A continuous heat recovery operation requires at least two regenerators – one that provides energy to the combustion air, while the other recharges from the flue gases (Exhibit 26). An alternative arrangement involves a continuously rotating wheel where flue gas and the combustion gas flow through different parts of the wheel as it rotates allowing for heat transfer.

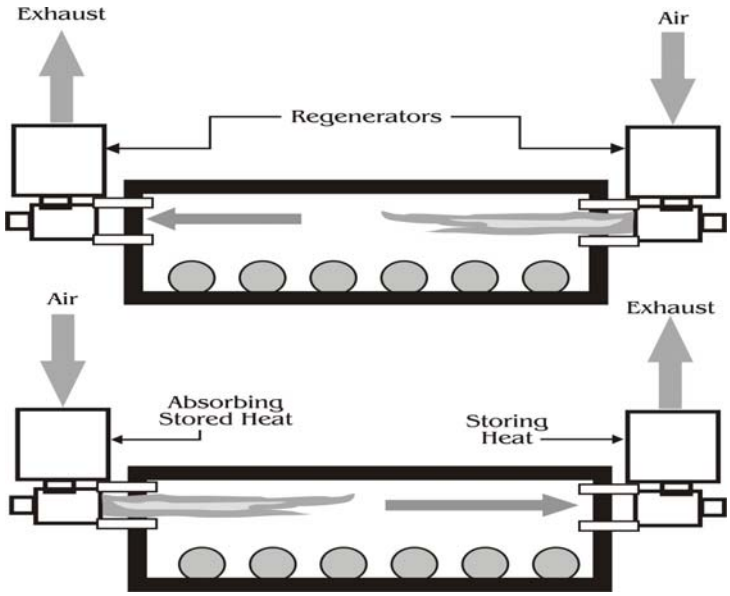

Source: http://www.eere.energy.gov/industry/bestpractices/pdfs/35876.pdf

Exhibit 26: Schematic of a regenerator system

While recuperators separate the gas streams with physical barriers for a continuous operation, regenerators separate gas streams by time lag and operate intermittently.[69] The switching of gas stream back and forth requires more complex, expensive control system than recuperators.

4.3.4 Thermoelectric Devices

Thermoelectric, thermionic, and IR-photovoltaic materials use temperature gradients to produce electricity. Their conversion efficiencies today are low (typically <8%), limiting their use to small-scale (<50,000 Btu/day of useful work) applications in niche markets where energy efficiency is not a concern. Significant R&D worldwide is leading to development of new materials with efficiencies of 12% and potential of up to 30% for future materials. These newer materials may become advantageous for recovering waste heat that is lost in melting applications.

4.4 Molten Metal Handling Systems

Handling of the molten metal at various stages in the metal casting operation (melting, holding, and delivering) can significantly impact the overall process energy. For example, transferring

molten metal between furnaces or to the casting station is a critical step in the casting process that could be improved for energy efficiency. With the rising gas and electric prices, maintaining the temperature of the metal between the melting furnace and the pouring station can be expensive. If the distance between the melting room and pouring room is short or negligible, then less heat would be needed to do so.[70] Thus, close proximity of the furnace to the pouring location can add up to substantial annual savings and improved safety.

4.4.1 Dosing Furnaces

Dosing furnaces are closed holding furnaces with a spout for direct metal delivery (Exhibit 27). They are used to dispense an accurate amount of molten metal to the die casting machine or mold line. The advantage of the dosing furnace is that because of the closed structure, it minimizes heat loss and protects the molten metal from excessive oxidation. These furnaces require only about one-fifth of the energy to hold 2,000 pounds of aluminum in comparison to an open crucible furnace, and one-third of the operating costs of a comparable holding furnace. In Europe, dosing furnaces are replacing ladle furnaces in die casting because of their ability to pour accurate amount of molten metal at the right temperature.[71]

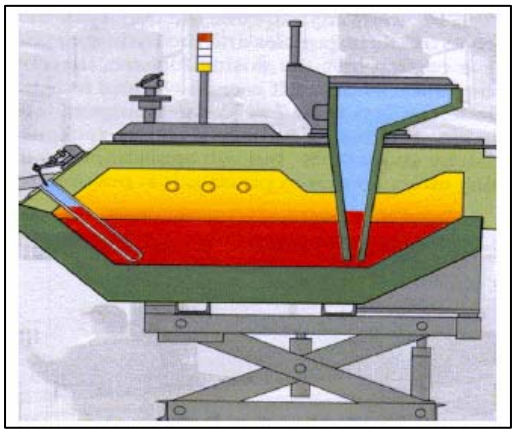

Source: Case Western Reserve University

Exhibit 27: Schematic of dosing furnace

4.4.2 Electro-Magnetic Pump Systems

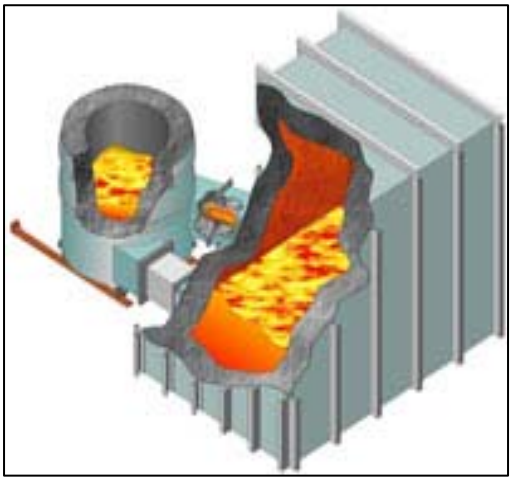

http://www.sovereign-publications.com/emp.htm

Exhibit 28: Electro-magnetic pump system

An electromagnetic pump (EMP) may be used to circulate hot metal through a patented scrap charging chamber (Exhibit 28).[72] The pump circulates the molten bath in the reverberatory furnace at a maximum flow rate of approximately 10 tons/minute. Melting of metal inside wells, supplied with molten metal from electro-magnetic pumps, has become more common since the mid-1990s.

EMP systems offer two opportunities to improve melting efficiency: temperature homogeneity of the melt pool and side-well melting. The melt pool in most furnaces is stagnant, which contributes to the development of a vertical temperature profile in the pool. When the surface temperature of the molten metal is different from the floor temperature, it creates inefficiency since radiant energy from the roof and conductive energy from the hot flue gases is being directed at the hot side of the metal pool. Stirring of the pool with electro-magnetic pumps can eliminate the vertical temperature profile, enhancing efficiency and productivity. Also EMP

systems can be used in combination with a reverberatory furnace where hot metal is circulated by means of a high-capacity pump from the hearth to a special charging well, then back into the hearth, either directly or through a dross-settling well.

EMP systems can be adapted and retrofitted to varied furnace configurations, including closed hearth, twin chamber, open-well, and tilting furnaces. The pump itself has no moving parts and requires limited preventive maintenance. High recovery rates are also achievable without the use of salts.

4.4.3 Ladles

Ladles are also used to transfer molten metal from a holding furnace to the pouring station or shot sleeve of a die cast machine. The automation of the ladle system allows the delivery of molten metal in a consistent period for every cycle with accurate quantity of molten metal. The use of auto ladling equipment has become commonplace in aluminum die casting, resulting in less pouring-related casting defects and low burden on the manpower used in hand pouring.[73] Effective insulation of the ladle allows more efficient transfer of the molten metal. This increases ladle capacity and reduces largely operating costs. Other benefits include the ability to maintain the current lining profile, minimize heat loss, and reduce energy consumption.[74]

Preheated ladles can also reduce the melting energy required in the furnace (higher tap temperatures are required). Plants driven by productivity (tapping as many heats as possible every shift) typically tap into ladles that are fully soaked and preheated. On the other hand, plants that are limited in productivity by schedule (limited number of heats per shift) typically have ladles that are not completely soaked. At this time, most ladle metallurgy consists of wire feeding with limited use of gas stirring or metal heating.

4.4.4 Launder Systems

Improvements in launder system allow uninterrupted flow of molten metal from furnace to the pouring station/die casting machines. This improved system eliminates time and labor expenses. The launder is insulated well to conserve energy as the molten metal travels from the central furnace to another location. The use of a central melting furnace with a fully covered design of the launder substantially reduces metal loss due to oxidation and eliminates the hazards of exposed molten metal and radiant heat to the work area. In aluminum launder systems, effective insulation helps maintain the temperature of the molten material at approximately 750°C (1,400°F) to avoid “freezing” the molten aluminum and to maintain consistent flow throughout the distribution system. The recent development in insulation technology can reduce the insulation thickness by 1.5 inches, reduce cold face temperatures by 43%, and reduce heat loss by up to 67%. It also improves product quality and extends launder life.

4.4.5 Mechanical Circulating Pumps

Lack of effective circulation in the molten metal in the furnace tends to concentrate the heat on the surface of the molten bath and also, increase surface oxidation and dross formation. Temperature differences within the bath can be as high as 60 to 100°C without effective circulation,[75] while good circulation can reduce it to as low as 4°C. The mechanical pump (Exhibit 29) forces the circulation of the molten metal bath, reducing convective energy loss from the surface of the bath. Benefits of homogeneous temperature include improved melting rate, reduced melt cycle time, enhanced metal quality, and reduced energy consumption. In addition, the stirring of molten bath increases refractory life as more heat is transferred to the metal and less is absorbed into refractories. Traditional pump systems have graphite posts that are vulnerable to oxidation and, therefore, require frequent replacements. A recent technology replaces graphite with stronger material such as ceramic and steel.[76]

Source: Metaullics Systems

Exhibit 29: Mechanical Circulating Pump

4.5 Fuel Combustion Technologies: Oxy-Fuel Burners

Alternative combustion technologies, especially oxy-fuel burners, have been attracting significant attention because of the increasing environmental demands for reduced emissions, particularly of NO_x and improved energy efficiency in remelt furnaces. The use of oxy-fuel burners increases the chemical energy and decreases the electrical energy.

Increased oxygen in the furnace environment, however, can lead to greater oxidation of the melt surface and increased dross formation. These effects translate into reduced thermal transfer to the melt and increased melt loss. Further, some foundries are hesitant to implement oxy-fuel burners because they are afraid of wearing the refractories at a greater rate. Balancing these apparently competing effects has been the focus in designing combustion approaches to ideally obtain low NO_x emissions and minimal melt loss.

ITP-sponsored research has been conducted on minimizing NO_x emission using oxygen-enhanced combustion.[77] Researchers found that the thermal performance of a burner was optimized by enriching the flame within a range of 35 to 50% oxygen, consuming roughly half of the oxygen of traditional oxy-fuel system. Use of a novel air-oxy-natural-gas burner at a commercial furnace at Wabash Alloys plant in East Syracuse, New York has demonstrated 30% increase in productivity, 40% increase in energy efficiency, as well as substantial reduction in NO_x emission.

A project led by the Gas Technology Institute (GTI) and sponsored by ITP addressed the combined issues of burner efficiency and dross formation on aluminum melt.[78] The work focused on air-oxy-fuel mixture burners, with the optimum oxygen range of 30 to 35%; the project is

developing burners that allow specific control of flame shape and oxygen distribution within the flame. Using the concept of "self-optimized combustion system," a flame was produced that has a fuel-rich zone at the bottom to minimize exposure of the aluminum surface to oxygen.

Innovative burners can also contribute to the reduction of melt loss. Studies in formation of oxides and spinals, turbulence, and alloy constituents can reduce melt loss. Secat, Inc. is currently leading quantitative research on formation mechanisms and potential alternative solutions.[79] Possible solutions identified in the early stages of the project are control of furnace atmosphere, use of minor alloying elements that dramatically affect the kinetics of oxide formation, and reduced melt surface/furnace atmosphere interface through various barrier techniques. The project aims to reduce melt loss by 2%.

4.6 Preheating Systems

The high-temperature off-gas from the melting furnace can be used to preheat scrap for the second charge of the heat or the first charge of the next heat. Scrap preheating has proven to reduce the energy for melting (by up to 50-75 kWh per ton).

The off-gas, which normally exits through the "fourth hole," preheats the scrap to a temperature in the range of 450°C to 600°C (840°F to 1,110°F). A side benefit of preheating is complete removal of moisture from the scrap. Preheating the scrap to an average temperature of 500°C (930°F) reduces the electrical energy requirements by 30 to 60 kWh per ton and power-on time by 5 to15%. However, in some cases, the delays associated with scrap preheating can reduce productivity. Some specific technologies are reviewed below.

4.6.1 Shaft Furnace

A shaft furnace is an advanced form of scrap preheating. It is mounted on top of the electric arc furnace; off-gases leaving the melt zone rise up the shaft and pass through the next scrap charge. A number of shaft furnaces are in operation in the steel industry in the United States, Mexico, and Europe. It is reported that up to180 kWh/ton energy savings can be achieved with a twin shaft and 135 kWh/ton with a single shaft. Types of shaft furnaces include Comelt,[80] a furnace designed with inclined electrodes and a shaft furnace feeding the scrap between the electrodes; a single electrode DC furnace with scrap preheating and extensive use of burners; and Conarc,[81] a basic oxygen furnace and electric arc furnace using extensive decarburization of hot metal.

In order for the shaft furnace to be practical, the heat size must be at least 45 tons and the furnace must be equipped with gas burners to generate sufficient off-gas. The complexity of these technologies requires large capacity furnaces operated on a continuous basis to be technically and economically feasible. Therefore, these technologies are not applicable to typical foundry operations.

The Japanese steel industry is developing the Econarc process, which uses extensive methane and shaft furnace preheating.[82] They have operated a 130-ton furnace. However, because the

scrap preheating system must be of large capacity to capture the energy from combustion, this system is also impractical for foundry operations.

4.6.2 Twin Shell System

Preheating systems have been in use for more than a decade in electric arc furnace steel melting shops. Twin-shell furnaces are among the more recent developments, incorporating preheating as an integral part of the melting process. At a twin-shell operation, while one part of the furnace is making steel, the other side is being loaded with scrap. The off-gas from the operating side of the two-furnace system is piped to the other side to heat the charge before melting. Generally, this technology is used with a single graphite electrode DC furnace.

The off-gas from the current heat being melted or refined is passed through the scrap for the next heat in the second furnace shell. Typically, only the first charge is preheated. Therefore, most plants try to operate with a single charge. Twin shell systems are cheaper than having two separate electric arc furnaces because they require only one set of electrodes and achieve similar production rate. Electricity costs are also lower with the twin shell system. When two scrap charges are required, the first (preheated charge) contains approximately 60% more scrap than the second charge. Preheating in the second shell can also be supplemented by gas burners.

Nippon Steel reported energy consumption of 260 kWh/ton steel with preheating to about 900°C (1,650°F), achieving a 30% energy reduction from conventional melting. This technology is applicable to larger foundries' arc furnaces (greater than 20 ton) but would be difficult to retrofit as it requires replacement of furnaces.

4.7 Refractories

Refractories are used throughout the various processes conducted in all kinds of furnaces in the metal casting industry, affecting approximately 90% of the direct energy consumption in these processes. Improvements in refractory systems, such as life extension, offer high potential to save energy up to 8.5 trillion Btu per year.[83] Ceramic linings are used in most furnaces to minimize reaction resulting in corrosion or mechanical damage in the furnace when processing specific metals. Although the service life of refractory linings has been extended in the last decade, there still exists a substantial problem where thermal efficiency may be sacrificed for a better protective refractory lining.

A recent development in insulating materials is the use of micro-porous silica. The improved opacifiers block heat transfer in radiation lowering thermal conductivity. The low thermal conductivity can increase the capacity of ladles, kilns, industrial ovens and commercial appliances while maintaining or improving thermal performance. It can reduce weight, which in turn, can reduce structural requirements for furnaces and other high-temperature vessels.

The development of insulation system within refractory system also ensures proper temperature control in melting systems (for example, maintaining a homogeneous aluminum liquid throughout the aluminum melter). The board form of the new insulation materials can backup

insulation to reduce heat loss, improve product quality, and reduce operation costs. In addition, it can reduce insulation thickness by 50% compared to ceramic fiberboards and minimize heat loss by 30%. It also improves product quality and extends furnace life.

However, barriers still exist. Research is required to develop methods to reduce/eliminate refractory failure due to physical erosion and chemical corrosion (by MnO and FeO in steel foundries), fusion of refractories, clogging or build-up formation in channels and throats, highly basic (calcia-containing) slags in steel casting, and other factors. Reducing the thermal conductivity, as well as improving the chemical and mechanical properties of the refractories, will have a significant payoff in the overall fuel efficiency of melting operations.[84]

4.8 Melting Schedule

Even the most efficient furnace could be inefficient with poor scheduling. Melting in cold furnaces increases the energy requirement by as much as 30 to 50%[85] from that used by melting in a hot furnace with a heel. Unlike induction furnaces where a heel reduces energy efficiency, electric arc furnaces increase efficiency when melting with a liquid heel. The most efficient operations use creative scheduling (fewer melting days per week, fewer furnaces, etc.) to maximize the number of heats each day per furnace. Schedules that minimize melting delays achieve lower energy loss from conduction to the refractory and from liquid surface radiation. In addition, energy efficiency is maximized when consistent heat size is scheduled. Scheduling different-sized heats in the same furnace reduces energy efficiency.

5. Challenges to Adopting New Technologies

The adoption of new advanced melting methods in foundries faces several more challenges besides the specific technical barriers described for the various current and emergent melting technologies in section 4. The industry make-up, domestic business climate and strong global competition in the metal casting sector discourage the implementation of energy-efficient melting technologies.

Dominance of Small Businesses

The U.S. metal casting industry is dominated by small- to mid-sized companies. Approximately 80% of the 2,480 metal casting facilities have fewer than 100 employees, 14% have between 100 and 250 employees, and the remaining 6% have more than 250 employees.[86]Small businesses find it difficult to assume the high costs (labor and facilities) and the risk associated with R&D, particularly long-term R&D, to improve metal casting technology and process efficiencies. Moreover, many companies in the industry are hesitant to adopt new technologies, practices, and tools for fear of possible negative effects that these changes might bring to long-"proven" production techniques and, as a result, their already small profit margins.

Limited Available Resources

A comparison of surveys conducted in 2001 and 2003 indicate a significant decline in the profit margin for an average metal caster from 4.6 to 1.81% of sales, with iron operations specifically losing an average of 1.69% during this period.[87] The diminishing of the metal casters' already small profit margins over the last few years has made it difficult for the industry to invest in R&D and implement capital-intensive advanced melting technologies.

The metal casting industry prefers to spend its limited resources on incremental improvements and retrofit technologies to the existing equipment, since they require lower capital investments. Additionally, the metal casters, when considering implementing a new or modified technology, tend to look at the contribution that the technology can make to their business's bottom line rather than its energy efficiency. Many times, metal casters spend significant portions of their limited resources on new molding technologies and finishing lines in lieu of new melting systems to improve their casting yield and reduce scrap rates.

Lack of Economies-of-Scale

Energy efficiency is related to the size of the melting system. The smaller equipment size requirements for the metal casting industry contribute to a higher melting equipment surface area to volume ratio. This means that the surface radiation and conduction from the melting devices in the numerous small casting operations are proportionally greater when compared to the larger melting devices used for wrought steel and aluminum ingot industries.

The small capacity of furnaces in the majority of the metal casting facilities restricts application of wrought steel technologies. The small furnaces typically lack an adequate electrical control system and computer control of the furnace or additives system to support the superior technologies available to the wrought steel and primary metals industries. Technologies from larger metal industries also require an investment in new emission control systems to deal with the additional off-gas content. This is an added cost for the metal casters, which further discourages implementation.

Considering a specific case, the majority of the steel foundries are small operations with average furnace capacity of 13 tons in electric arc furnace shops and a little over 1 ton in induction furnace shops, while the furnaces in the wrought industry can range from 100 to 300 tons. The markedly smaller scale of the steel furnaces leads to higher heat losses and increased difficulty in implementation of wrought-type technologies in steel foundries. The long arc and foamy slag technologies that have been effective in reducing energy consumption in the wrought industry are not practical for the steel foundries because steel foundry transformers are typically undersized to accommodate these technologies.

Wide Variation in Melting Operations' Needs

Current melting technologies within the metal casting industry do not provide for a one-size-fits-all method because of the immense diversity of the metal casting line of products. Each casting facility has varying alloying requirements, which influence the type of melting technologies it uses. Some furnaces are used to reduce the amount of oxidation of the molten alloys and dross formation, while others are used because their fuel/feedstock provides the alloying ingredients

necessary to impart the mechanical properties the casting facility desires. Furthermore, the temperature requirements vary for each alloy/metal melted in the furnace. Therefore, the concept of a single melting technology that can crosscut the entire metal casting industry is unreasonable. Advances along multiple pathways are required that suit the needs of different casting facilities for achieving significant energy savings in the overall melting process.

Batch-Melting Schedule

The scheduling of melting is traditionally determined by the casting requirements of the metal casting facility. Most casting facilities melt in batches, in which case, the facilities tend to schedule to melt at certain hours of the day on certain days of the week. This practice requires frequent starting and idling of the melting equipment, thus reducing the efficiency of the operation. In addition, many metal casters produce variable-sized heats, which require the operation of several different-sized furnaces and involve heating many cold furnaces, a factor that further reduces the energy efficiency of melting. The inconsistent heat sizes also increase the maintenance cost because of the stress imposed on the furnace refractory from the significant swings in the temperature.

Requirement of New Permits

New furnace technologies, particularly those that require new or expanded exhaust systems, frequently require local and state permits. Obtaining these permits incur financial costs and require valuable personnel time. Many small metal casters find it difficult to allocate these resources for acquiring permits when implementing new technologies at their foundries. Advanced melting technologies that can be retrofitted onto the existing equipment without any need for new permits are, as a result, more likely to be adopted by the industry.

6. Future Direction of Research: Potential Energy-Saving Technologies

The following recommendations for R&D offer the most promising opportunities for decreasing energy consumption in melting operations in the metal casting industry.

Retrofit Technologies Database Tool

Considering the diversity of the U.S. metal casting operations and their limited resources, possibly the most advantageous path for introducing energy-efficient melting technologies is to develop a web-based database tool of available retrofit technologies. This tool will enable metal casters to compare and weigh their options when evaluating the new melting technologies. The casters must be able to input their furnace type, scheduling, alloy, and tonnage requirements. The tool could then output various retrofit technology options or a combination of options that can meet their production demands, along with pros and cons of each option. The tool should also provide rough estimates of the implementation cost and fine-tune the potential of each retrofit technology, along with the estimated energy and cost savings. Such a tool would assist the metal casting industry in making educated and nonbiased decisions on how to improve their foundries'

energy efficiency within the melt room. This tool would also allow metal casting companies to identify retrofit technologies that will have the largest impact on their bottom line.

Optimized Use of Natural Gas, Carbon, and Oxygen

The wrought steel producers use significantly more natural gas, carbon, and oxygen during melting than the metal casting industry. Combustion of natural gas, charge carbon, and CO to CO_2 (post-combustion) can reduce electrical energy consumption by 150 kWh per ton of steel. The combustion of natural gas and carbon must be at least 40% efficient in order to reduce the total energy consumption. The use of post-combustion energy can be looked upon as virtually "free energy."

Research should be conducted to develop a computational fluid dynamics model of post combustion to better understand how to use the CO and CO_2. Modeling and optimization of carbon oxidation is also an important research focus area. Models for the process can be developed that will use specific input parameters from plant operations.

Flexible Heat Size and Scheduling

Varying heat sizes and scheduling of heats are major sources of energy inefficiencies in the metal casting industry. If a new furnace was developed that would allow for flexibilities in production scheduling without the associated energy losses, significant cost and energy savings could be achieved. The principal batch melters today – induction furnaces, electric arc furnaces, reverberatories, and crucible furnaces – are all inefficient when used with flexible scheduling.

New furnace designs must be developed with flexible-sized melting units and reduced heat requirements for the first heat. Research should also investigate low-conductivity refractory linings and other options for flexible melting units, such as single electrode DC, which has the potential to improve both productivity and energy efficiency.

Metal-Casting-Sized Ladle Metallurgy Furnaces

One of the most effective systems in the wrought industry is the ladle metallurgy furnace where the temperature of the melt can be adjusted, chemistry of the melt optimized, and quality of the steel enhanced through treatment. It has been difficult to directly transfer this technology to the metal casting industry because of the small ladles used in the latter. Large heat losses from the smaller ladles limit the treatment time available without reheating the equipment, reducing the scope for alloy and flux dissolution.

A potential research field to overcome these issues is to develop a metal casting-sized ladle metallurgy facility that is flexible in tonnage, allowing for adjustable tonnage within a single vessel. The system would be designed to minimize heat losses during operation and to allow reheating. This would offer the advantages of wrought types of ladle metallurgy facilities, such as enabling large amounts of alloy additions in ladle. This could help the metal casting industry reduce costs and increase the quality to levels similar in the wrought industry. It would allow metal casters to use primary furnaces as melters and use the ladle to do metallurgical refining and alloying.

Improved Refractory for Coreless Induction Melters of Cast Iron

Today many cast iron manufacturers use induction melting for cast iron. However, the current melting practices and refractories result in rapid refractory destruction. Research should examine new materials for refractories that will last longer. Research should also develop new melting systems that help increase the refractory campaign life. The combination of new refractories and new melting systems that dramatically improve refractory campaign life would significantly reduce energy use in iron melting operations.

Wider Applicability of Induction Furnaces

Current aluminum furnaces are limited in their utility because they are prone to forming excess oxidation film during the melting process. In addition, the melting of aluminum scrap requires that a heel of molten metal be left at the bottom of the furnace to promote coupling and only clean scrap be used because of the limited off-gas cleaning system and the lack of refining capabilities in the induction furnace design.

Research and development to limit the formation of oxide films offers significant potential for energy savings. Also, R&D is needed to combine induction melting with some chemical energy and refining capabilities to promote induction melting in ferrous casting shops. This would enable ferrous casters to refine their metal during melting and reduce the amount of virgin materials. This could reduce the cost of steel production in these furnaces. Finally, there is a need to better educate the metal casting industry on best practices in induction melting, including how to properly pack these furnaces to ensure better coupling during melting.

Scrap Preheating

Scrap/ingot preheating has the potential to reduce energy by 10 to 20% in batch melting operations. Preheating systems, such as a second furnace or a shaft above the furnace, are the most promising. Research is needed to develop a comprehensive energy transfer model linking the furnace operation with gas generation and scrap/ingot preheating. The model should use natural gas, carbon and oxygen, and provide for heat transferring to the scrap and ingot.

Research must also focus on the design of efficient scrap/ingot preheating systems for batch melting operations. The design should consider the space limitations that exist in smaller casting facilities and the charging requirements, and ensure efficient heat transfer. Most importantly, the design should offer reliability and require minimal maintenance.

Improved Stack Furnace Design

The rapidly rising energy costs today warrant the need to improve the design and structural materials utilized in the construction of stack furnaces. This would limit the maintenance required in operating a stack furnace and make it a viable alternative to the reverberatory furnace. There is also a need to reduce the size of the stack furnace to enable its installation in smaller facilities that may not have the ceiling room to accommodate these melting systems.

Ferrous Launder System

A launder system is an insulated trough connecting the furnace to the die casting machine or pouring ladles. These trough systems are refractory lined, insulated and temperature-controlled, and are covered to prevent contamination and heat loss. They eliminate splashes and dribbles of molten metal that occur when using ladles to transfer molten metal around a plant, thus ensuring workers' safety. These systems also provide a continuous supply of molten metal to the casting operation and help keep the temperature constant.[88]

However, these systems are limited to high-volume nonferrous die casting applications and do not exist for ferrous casting operations. This is primarily because molten ferrous alloys need to be held at much higher temperatures than nonferrous alloys. A launder system would need to be created where it could pump and maintain molten iron and steel at temperatures ranging from 1,320 to 1,760°C (2,500°F to 3,200°F). Such a system would only be applicable to continuous operations such as iron foundries producing large quantities of parts each day for the automotive industry. R&D would be needed to develop a system that could pump and maintain molten iron and/or steel at extremely hot temperatures. Such a development could replace the widely used ladle system, which causes excessive radiation energy loss.

7. Conclusion

Several advancements in melting technologies have been made over the last few decades, but significant opportunities still exist for the metal casters to improve the melting efficiency and reduce the metal loss. The implementation of the existing best practice technologies in the industry can alone save approximately 1.2 million Btu for melting a ton of iron and 3.0 million Btu for a ton of aluminum (or 1.2 trillion Btu per year for iron and 3.0 trillion Btu per year for aluminum).[89] Considering that iron and aluminum casting tonnages comprise more than 85% of the total casting tonnage, the savings potential in melting these metals promises to be substantial.

This study, while exploring breakthrough concepts that could possibly revolutionize melting within the metal casting industry, identified several emerging melting technologies in the market that are energy reducing; however, no single technology was determined to be a "breakthrough technology" to qualify it as a "Grand Challenge" opportunity for the ITP Metal Casting subprogram to pursue. This lack of single revolutionizing technology may be explained by the fact that the melting process is an amalgamation of several systems functioning independently of each other, as described in section 3 (page 3). Each of these units in contributing to energy loss also offers the potential for improving the process efficiency. Thus, to achieve the maximum energy reduction in any metalcasting operation, a combination of suitable advanced technologies and practices must be explored.

Further, the research path for advancing melting technologies in the metal casting sector must be guided by pursuing retrofitting technologies that can supplement the existing furnaces, as they provide a cost-effective and low-risk method to improve the melting efficiency—factors that are crucial in decision-making for the metal casters. Due to the industry's small profit margins, metal

casters are reluctant to risk replacing entire melting systems, but will accept retrofit technologies more easily.

Since the melting technologies deployed by the industry are selected based upon the alloy or the metal being melted, the casting process and the scale of the operation, there is no one-size-fits-all solution and hence, the "best" combination will vary with the application. For instance, immersion heaters would not revolutionize the steel or iron casting facilities because they can not reach the temperatures required to melt and maintain a heel, nor do they provide the alloying requirements for ferrous melting. Varied solutions seem to be the key to accomplishing sizeable energy savings for a diverse industry like metal casting. Accordingly, metal casters require a decision-making tool that assists in selecting the best-suited retrofits for their specific operation. A database tool must, therefore, be developed that serves this purpose. It will not only inform metal casters about the currently available retrofit technologies, but also identify the optimal energy-efficient solution tailor-made for each metal casting operation based on specific inputs about the melt operation and its production needs. Such a non-biased resource geared toward individual set-ups will encourage metal casters to opt for new technologies that are energy efficient.

Currently, furnaces typically used in the U.S. metal casting facilities include cupola, induction, electric arc, and reverberatory furnaces. Research efforts have been aimed at reducing the thermal losses in these existing furnaces by focusing on the refractory, ladle systems, burner systems, fuel sources, intelligent control systems, and other aspects of the operations. Although barriers still exist, the retrofitting technologies provide metal casters with easy-to-implement measures for enhancing the melting systems already in place. Other than retrofitting current furnace systems, some melting processes improve efficiency by combining a variety of existing furnace structures, cashing in on different advantages from each furnace type.

The discussion on some of the more innovative technologies (section 4.2), such as the solar furnaces, demonstrated how alternative energy sources can be utilized but still lack practicality for wide-scale commercialization. Microwave melting is another emerging alternative with potential broad applicability but is currently limited to niche applications being capital intensive. Such breakthrough melting methods would certainly benefit the metal casting industry in the long term. However, as of now, they require continued research efforts and extensive evaluation in pilot plants before their implementation on all aspects of the operation (performance, durability/maintenance, labor requirements, etc.).

Lastly, advances in melting technologies also include research and development in melting practices associated with scheduling of operation, heat size, molten metal delivery, and preheating. Improvements in these areas could significantly enhance energy efficiency and reduce melt loss without requiring implementation of any new technical system. Although these technologies require little or no capital for deployment, engineering assistance is needed in order for the facility to reap its maximum benefits. For example, steel melting energy efficiency can be improved if there is no time delay in holding the molten metal where additional energy is required to maintain the temperature of the molten metal until it is poured. If a furnace can be scheduled so that it can operate at continuous full power, the energy requirements for melting steel can be reduced substantially.

The study concludes that to achieve energy reduction goals, renewed R&D efforts must target the current technical barriers in the melting technologies and pursue multiple paths as recommended in section 6 (page 36). Advances from such efforts will not only save substantial energy in the overall melting process, but also provide high-quality molten metal that will reduce the cost of the casting process and enhance the quality of the final casting product. Considering these recommended R&D avenues in shaping the ITP Metal Casting portfolio will ensure effective utilization of the program's valuable budget resources.

Endnotes

[1] Albany Research Center, "Improving Energy Efficiency in Aluminum Melting", Presentation at 2005 Aluminum Portfolio Review.

[2] J.F. Schifo, "Theoretical/Best Practice Energy Use In Metalcasting Operations," Keramida Environmental, Inc. May 2005, p 4.

[3] Department of Energy, Energy Efficiency and Renewable Energy, Industrial Technology Program, Aluminum Industry of Future, "Indirect-Fired, Controlled Atmosphere Decoating of Aluminum Scrap" 2002.

[4] Vladimir Y Gershtein, "Economics of Oxygen-Based Aluminum Smelters," Industrial Heating, November 2000.

[5] Department of Energy, Energy Efficiency and Renewable Energy, Industrial Technology Program, Aluminum IOF, "In-Situ, Real-Time Measurement of Melt Constituents." 2004.

[6] "Technology of Metalcasting," Melt furnaces. p 113.

[7] "Thermal Efficiency of Steel Melting," by Kent D. Peaslee, Simon Lekakh and Bradley Randall, 58th T&O Conf Proceedings, SFSA, 2004.

[8] "Energy and Environmental Profile of the U.S. Metalcasting Industry", September 1999, Energetics, Incorporated.

[9] Albany Research Center, "Improving Energy Efficiency in Aluminum Melting" presentation at 2005 Aluminum Portfolio Review

[10] Communication with Case Western Reserve University

[11] Department of Energy, Metal Casting Multi Year Program Plan, p.1.

[12] Natural gas has more than doubled in the last five years and is expected to rise in costs substantially in the near term as a result of Hurricane Katrina in the Gulf Coast, a key producer of domestic natural gas.

[13] North American Die Casting Association, Energy Saving Manual, 1998.

[14] This kits is developed by a British company, Morganite.

[15] H.P. Harbin and E.S. Reno Jr., New Ideas for Cupola Refractory Practice, AFS Trans. 98, p. 529-531.

[16] Melting More Efficiently. Foundry Management & Technology, April 2005.

[17] T.B. Niehoff, S.P. Smith and D. Saha, Cupola Operating System for Dust Injection and Improved Process Flexibility, AFS Tran. 1998, p. 427-433.

[18] W. J. Peck, W. H. Provis, B.A. Buczkowski, A.D. Karp and S.V. Dighe, "Plasma-Fired Cupola: An Innovation in Iron Foundry Melting," AFS Transaction Paper, 90th Casting Congress, May 11-15, 1986.

[19] J. Gray, C. Fry, W. Chaput, M.F. Darr , and S.V. Dighe, Plasma Cupola Operations at General Motors Foundry, AFS Trans., Vol.98, p. 553-558.

[20] E. Schurmann and W. Hein, Contribution to Melting of Cast Iron in Cokeless, Natural Gas-Fired Cupola Furnace, AFS Trans., Vol. 96, p. 693-698.

[21]Energetics, Inc., Energy and Environmental Profile of the U.S. Steel Industry, prepared for the U.S. Department of Energy, August 2000., p37

[22]http://www.energysolutionscenter.org/HeatTreat/MetalsAdvisor/iron_and_steel/process_descriptions/raw_metals_preparation/steelmaking/electric_arc_furnace/electric_arc_furnace_equipment.htm.

[23]Department of Energy, Energy Efficiency and Renewable Energy, Industrial Technology Program "Advanced Scalable Clean Aluminum Melting Systems."

[24] North American Die Casting Association.

[25]J. H. Mortimer, Melt Shop 2000, AFS Tran. p. 275-286.

[26]J. H. Mortimer, Batch Induction Melting. The Science and Technology, Inductotherm, 2003.

[27]R.Q. Sharpless, Induction Melting: Moving into the 21st century, AFS Trans. 97, p.797-803.

[28]J. H. Mortimer, The Science Behind Batch Induction Melting, AFS Trans. 96, p.229-235.

[29]E. Dotsch, Quiet MF Coreless Furnaces for High Outputs, Foundry Trade Journal International, 09, 1995, p.98-102.

[30]E. Dotsch.

[31]Charles H. Fink, Jr., "Modern Induction Melting Improves Process and Productivity," Foundry Management and Technology, July 2005. [Electronic version].

[32]A.J. Grady.

[33]Oak Ridge National Laboratory, "Refractories for Industrial Processing: Energy Reduction Opportunities," December 2004.

[34]Vladimir Y. Gershtein, "Economics of Oxygen Based Aluminum Smelter," Industrial Heating November, 2000 [Electronic Version].

[35]http://cmc.aticorp.org/datafactors.html

[36]Oak Ridge National Laboratory, "Refractories for Industrial processing: Energy Reduction Opportunities", December 2004, p. 9.

[37]http://www.us.lindegas.com/International/Web/LG/US/likelgus.nsf/DocByAlias/nav_ind_iron_found_rot.

[38]A. J. Grady, Refractory Installation and Vibration System for Coreless Induction Furnaces, AFS Tran, 99, p.413-418.

[39]"Why Does Oxy-Fuel Make Sense?" Air Products and Chemicals, Inc. 2005, [Electronic version].

[40]J.F. Schifo, "Theoretical/Best Practice Energy Use In Metalcasting Operations," Keramida Environmental, Inc. May 2005, p.36.

[41]R. Bakish, "Advancements In Electron Beam Melting and Refining," Bakish Materials Corp., Englewood, NJ, Sept 2001 http://www.industrialheating.com/CDA/ArticleInformation/coverstory/BNPCoverStoryItem/0,2830,62953,00.html

[42]http://www.ohioshowcase.org/pdf/post-conference/Wednesday/Industry%20Breakout%20Sessions%20(Afternoon)/Session%20B%20-%20Metal%20Casting/B-4%20Eckert.pdf

[43]Ed Kubel, "Advancements in Microwave Heating Technology," IndustrialHeating.com, January 2004, p.49

[44]R. Bakish, "Advancements In Electron Beam Melting and Refining," Bakish Materials Corp., Englewood, NJ, Sept 2001 http://www.industrialheating.com/CDA/ArticleInformation/coverstory/BNPCoverStoryItem/0,2830,62953,00.html

[45]Beam Welding and Thermit Welding, retrieved from www.key-to-steel.com

[46]Department of Energy, Energy Efficiency and Renewable Energy, Industrial Technology Program "Continuous Fiber Ceramic Composites."

[47]Department of Energy, Energy Efficiency and Renewable Energy, Industrial Technology Program, Advanced Industrial Material program, "Advanced Intermetallic Alloys" 1999.

[48]Department of Energy, Energy Efficiency and Renewable Energy, Industrial Technology Program, "Isothermal Melting Process (ITM)."

[49]Department of Energy, Energy Efficiency and Renewable Energy, Industrial Technology Program, Metal Casting subprogram, "Advanced Scalable Clean Aluminum Melting Systems."

[50]Oak Ridge National Laboratory, "Infrared Heating of Forging Billets and Dies,"

[51]Ibid.

[52]The Aluminum Association, Inc, "High Density Infrared Processing: Opportunities in Aluminum," Retrieved from http://www.aluminum.org/Template.cfm?Section=Home&template=/ContentManagement/ContentDisplay.cfm&ContentID=2700

[53]Department of Energy, Energy Efficiency and Renewable Energy, Industrial Technology Program, "High Density Infrared Surface Treatments of Refractories," http://www.eere.energy.gov/industry/imf/pdfs/1758_hdisurfacetreatments.pdf

[54]Department of Energy, "Microwave and Process Technologies," [Electronic version].

[55]Industrial Heating, "Advancements in Microwave Heating" January 2005 [Electronic version].

[56]Y-12 National Security Complex,"Microwave and Process Technologies" [Electronic version].

[57]Industrial Heating, "Advancements in Microwave Heating" January 2005 [Electronic version].

[58]Department of Energy, Energy Efficiency and Renewable Energy, Industrial Technology Program, Steel Program, Novel Direct Steelmaking by combining microwave, electric arc, and exothermal heating technologies, June 2002. http://www.eere.energy.gov/industry/steel/pdfs/noveldirect_steelmaking.pdf.

[59]Edward B. Ripley and Jason A. Oberhaus, " Melting and Heat Treating Metals Using Microwave heating, "BWXT Y-12 National Security Complex Oak Ridge, Tenn. www.industrialheating.com.

[60]Plasma Beam Systems, Benefits of Plasma Aluminum Melting Furnace, retrieved from http://www.bayzi.com/one.benefits.html

[61]Ibid.

[62]http://www.imp.cnrs.fr/foursol/1000_en.shtml.

[63]Pacific Gas and Electric Company, "Industrial Heat-Recovery Strategies." May 1997.

[64]Ibid.

[65]Department of Energy, Energy Efficiency and Renewable Energy, Industrial Technology Program, Energy Matters newsletter, "Increased Efficiency through Waste Heat Recovery from Process Heating Systems, Fall 2001, Retrieved from http://www.eere.energy.gov/industry/bestpractices/pdfs/emfall2001.pdf.

[66]http://www.eere.energy.gov/industry/aluminum/pdfs/process_heating.pdf

[67]Pacific Gas and Electric Company, "Industrial Heat-Recovery Strategies," May 1997.

[68]Retrieved from http://www.gulfcoastchp.org/chp/Markets/TechThermal.aspx

[69]Department of Energy, Energy Efficiency and Renewable Energy, Industrial Technology Program, Energy Matters newsletter, "Increased Efficiency through Waste Heat Recovery from Process Heating Systems, Fall 2001, Retrieved from http://www.eere.energy.gov/industry/bestpractices/pdfs/emfall2001.pdf.

[70]Thermtronix, E-News (August 2005) Is Your Melt Room Organized for Maximum Efficiency? Retrieved from http://www.imakenews.com/thermtronixenews/e_article000407831.cfm?x=b5qtbBc,b3LlTy99.

[71]Dosing Furnace Replacing Ladle Furnaces in Die Casting, Striko UK, 2002, Retrieved from http://www.manufacturingtalk.com/news/sik/sik103.html.

[72]Richard C. Chandler, "Options for Optimizing Recoveries and Energy Consumption Light-Gauge Scrap Recycling," Metaullics Systems, Co. L.P. p. 7.

[73]Dustry Ousley, "Precast Auto Ladles for Aluminum Die Casters" NADCA.

[74]Unifrax technical literature.

[75]Pyrotek Improving Performance, "Furnace Operations," [electronic version]

[76]Developed by Metaullics Systems

[77]Department of Energy, Energy Efficiency and Renewable Energy, Industrial Technology Program, "High-Efficiency, High-Capacity, Low NOx Aluminum Melting Using Oxygen-Enhanced Combustion."

[78]Department of Energy, Energy Efficiency and Renewable Energy, Industrial Technology Program, "Low-Dross Combustion System."

[79]Department of Energy, Energy Efficiency and Renewable Energy, Industrial Technology Program, "Reduction of Oxidative Melt Loss," http://www.eere.energy.gov/industry/aluminum/pdfs/meltlossreduction.pdf.

[80]Developed by Voest Alpine Industries (VAI)

[81]Developed by MDH

[82]Developed by JP Engineering (merged company of formerly NKK and Kawasaki)

[83]Oak Ridge National Laboratory, "Refractories for Industrial processing: Energy Reduction Opportunities", December 2004.

[84]Ibid.

[85]Ibid.

[86]American Foundry Society, AFS Trend and Figures, www.afsinc.org/Trends/FactsandFigures.htm.

[87]Survey results Reveal 'Razor-Thin' Cost Picture, *Modern Casting* V93 N7, P30-33, July 2003.

[88]Winter, Ryan, *Die Casting Engineer*, "Melting and Handling of Zinc Alloys," North American Die Casting Association, March 2003, p. 46.

[89]J.F. Schifo, "Theoretical/Best Practice Energy Use In Metalcasting Operations," Keramida Environmental, Inc. May 2005, p. 4.