V.C.2 Power Parks System Simulation

Andrew Lutz
Sandia National Laboratories
MS 9053
Livermore, CA 94551-0969
Phone: (925) 294-2761; Fax: (925) 297-2276; E-mail: aelutz@sandia.gov

DOE Technology Development Manager: Sigmund Gronich
Phone: (202) 586-1623; Fax: (202) 586-9811; E-mail: Sigmund.Gronich@ee.doe.gov

Objectives

- Develop a flexible system model of distributed generation in H_2 power parks.
- Analyze the efficiency and cost of H_2 and electricity from DOE facilities.

Technical Barriers

This project addresses the following technical barriers from the Technology Validation section of the Hydrogen, Fuel Cells and Infrastructure Technologies Program Multi-Year Research, Development and Demonstration Plan:

- C. Hydrogen Refueling Infrastructure
- I. Hydrogen and Electricity Coproduction

Approach

- Use the library of Simulink modules developed for the various components to assemble system models of power parks.
- Compare simulations to the operational data from demonstration sites.

Accomplishments

- The library of components includes reformers, a fuel cell stack, a multi-stage compressor, a high-pressure storage vessel, an electrolyzer, and a photovoltaic (PV) collector.
- A detailed engineering model for an electrolyzer was developed that simulates performance with temperature-dependent voltage-current curves.
- Simulation of the Las Vegas system compared favorably to the observed data; economic analysis shows that the hybrid power station can produce H_2 at a cost near the 2005 goal specified in the Multi-Year Research, Development and Demonstration Plan.

Future Directions

- Continue to develop additional modules in the Simulink library, including a wind turbine, a H_2-fueled engine generator and a more fundamental model of fuel cell stack performance using a voltage-current relationship.
- Compare the simulations with data collected from the demonstration sites at SunLine, City of Las Vegas (CLV), and Hawaii Natural Energy Institute (HNEI).

Introduction

In the Multi-Year Research, Development, and Demonstration Plan (MYPP) [1], DOE envisions that the transition to widespread hydrogen distribution will likely begin with distributed generation. The cost of H_2 produced at small-scale facilities may be reduced by using power generation from fuel cells or engines to supply local needs. Sites where power generation is co-located with businesses or industrial energy consumers are called power parks.

Power parks use combinations of technologies. The refueling facility at the City of Las Vegas is an example of coproduction of electricity and H_2. The system is designed to operate the reformer in steady state, with the H_2 produced being split between a refueling station and a fuel-cell stack selling power to the grid. Power parks may take advantage of a renewable energy source. The SunLine Transit Agency has been demonstrating the PV-electrolyzer-refueling system for several years, and H_2 is imported from a local wind farm after electrolysis. SunLine is also bringing an autothermal reformer on-line.

The variety of technologies and their combinations that are being proposed for power parks suggests that each system will be novel, at least in some aspect of its design. Consequently, a flexible simulation tool will be very useful in evaluating the various systems and optimizing their performance with respect to efficiency and cost.

Approach

The deliverable of the project is a flexible tool for simulation of power parks, constructed in the language of the Simulink software [2]. Simulink provides a graphical workspace for block diagram construction and the flexibility to quickly assemble or reconfigure a system from its components. We extend Simulink's existing library of components by making a customized library of components for a H_2 system. The component models are based on fundamental physics and can be modified to represent specialized components. The basic modules that handle gas mixtures use the Chemkin [3] software package to provide thermodynamic properties—the reformer uses equilibrium solutions for the composition of the catalytic reactor and the combustor.

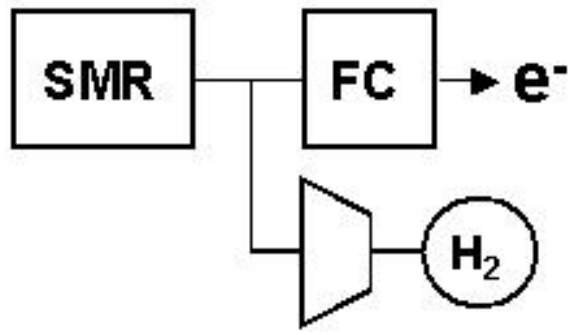

Figure 1. Schematic of the Hybrid Power System Representing the Las Vegas Power Station

Results

We have developed a library of Simulink modules for some of the various components being proposed for power parks. Existing components include reformers [4,5], a fuel cell, a multi-stage compressor, a high-pressure tank, an electrolyzer, and a PV collector.

This year, system simulations were performed for the facilities at CLV, SunLine, and HNEI. Given the space constraint, this report will focus on the comparisons to the operation at the Las Vegas power station.

Figure 1 shows a schematic of the hybrid system operated at CLV. The steam-methane reformer (SMR), which includes H_2 separation, feeds a fuel cell stack and a compressor for storage in the refueling station. The reformer was sized to produce 150 kg/day of H_2. If operated continuously, it could supply roughly twice the H_2 required to supply the 50-kW fuel cell, with the surplus available for vehicles.

The economic study of the cost of H_2 produced by the station is shown in Figures 2 and 4. Figure 2 presents parameter studies of the effects of the capital cost of the reformer and the cost of feedstock natural gas. The model includes the cost of compression to 5000 psi by a two-stage intercooled compressor operating at 82% efficiency on electricity at 8¢/kWh.

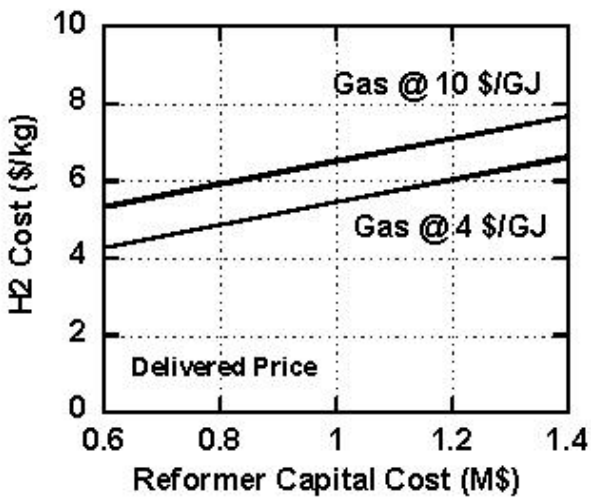

Figure 2. Parameter Study of the Cost of H_2 Delivered Versus the Reformer Capital Cost

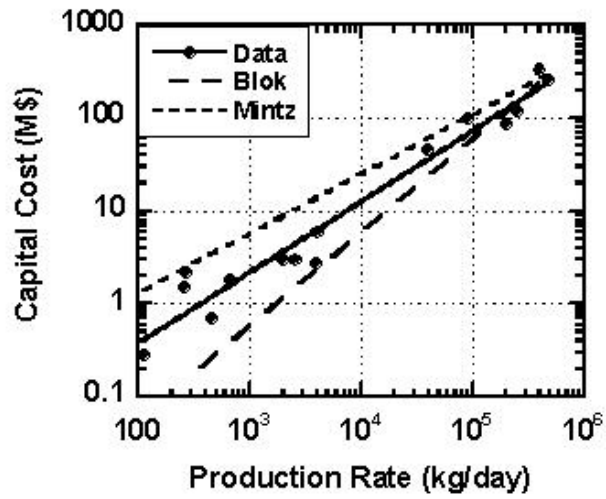

Figure 3. Correlation Between H_2 Production Rate and Capital Cost for Steam-Methane Reformers (Circles represent data gleaned from the literature. Dashed lines are empirical correlations [6, 7]; solid line is the correlation used in this study.)

The delivered H_2 price shown in Figure 2 also includes 0.92$/kg (from the MYPP current status [1]) to account for storage and refueling station costs. The cost of H_2 varies from 4-8$/kg depending on the capital and gas costs. The relative sensitivity of the H_2 cost with respect to capital is 56%, compared to 26% with respect to natural gas cost.

The parameter study in Figure 4 includes the dual effect of plant size and capital cost. The capital cost of a reformer increases with the facility size, but since the H_2 production increases, the unit cost decreases. To include this effect, a correlation between production rate and capital cost from the data [6, 7], shown in Figure 3, is used to simultaneously adjust the capital cost and the production rate. The results in Figure 4 show the price of H_2 decreasing nonlinearly. The dashed curve is the model result for production and compression; the solid curve adds 0.44$/kg for fueling station components, taken from the 2010 target in the MYPP [1]. Increasing the production rate of the facility brings the cost of H_2 near the 2005 MYPP target of 3$/kg. However, the 2010 goal of 1.50$/kg will be a challenge; the reformer cost will to have to decrease significantly. In fact, the MYPP target for distributed reforming (Table 3.1.2 [1]) assumes that the "other costs"—other than the natural gas cost—will decrease by 82% between 2005 and 2010.

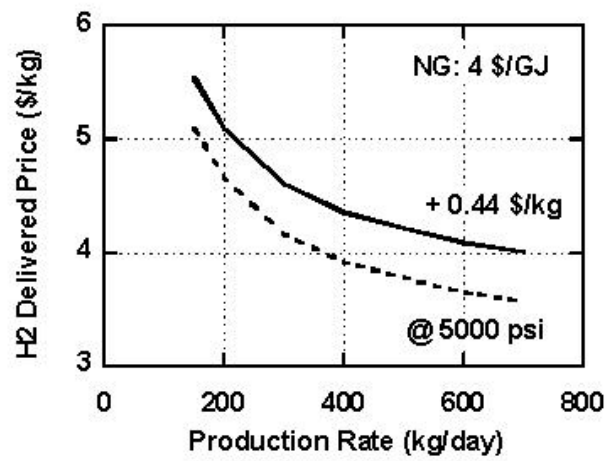

Figure 4. Cost of H_2 Delivered from Reforming Versus Production Rate, Using the Capital Cost and Production Rate Correlation in Figure 3 (Dashed curve represents the cost of H_2 production and compression to 5000 psi; solid curve adds 0.44$/kg to account for the refueling station.)

The efficiency of the fuel cell stack is shown in Figure 5. The curve is the net efficiency used in the model, while the symbols are measurements of the

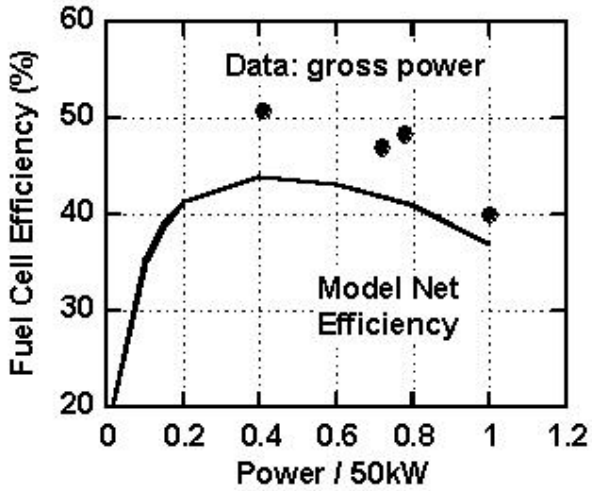

Figure 5. Comparison of the Data (Circles) for the Energy Efficiency of the Fuel Cell Stack to the Curve Used in the Model (The data is provided courtesy of Plug Power, with permission [8]. The data is gross power, neglecting parasitics. The model curve represents net power, assuming a 10% reduction for parasitic loads and power conditioning.)

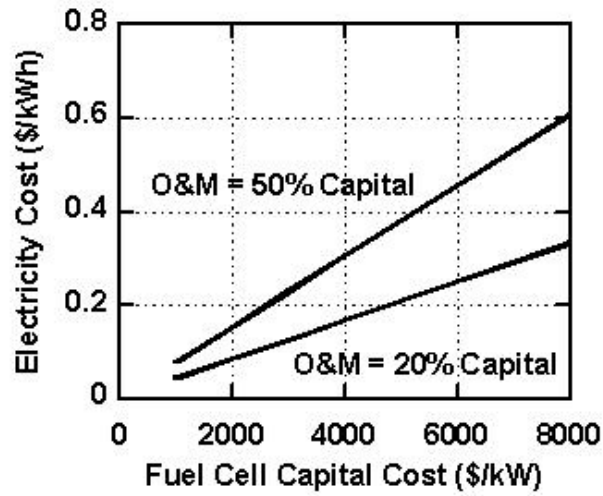

Figure 6. Cost of Electricity from the Fuel Cell for the Hybrid System (The two lines represent the effect of the yearly stack replacement at a cost of 20-50% of the original capital.)

gross power from the system [8]. To calibrate the model, the efficiency is reduced by 10% to adjust the gross power measurement to account for parasitics and power conditioning. The simulation runs the fuel cell at a load of 36 kW. The net fuel cell efficiency is 42%, defined as electricity out divided by lower heating value (LHV) of H_2.

The predicted overall energy efficiency of the hybrid system is 47%, defined as the sum of the electrical power and H_2 LHV divided by the natural gas LHV. The overall efficiency depends on the fraction of H_2 used by the fuel cell stack versus that compressed for vehicle refueling. At 36 kW, the fuel cell uses about half the reformer's H_2. The predicted efficiency of the reformer is 68%, which is consistent with that observed at the Las Vegas station [9]. For the reformer and fuel cell, the natural gas to electric power efficiency is 29%.

The price of electricity from the fuel cell, shown in Figure 6, is highly dependent on the initial capital cost and the annual maintenance cost. The cost attributed to the H_2 feed is 4.81$/kg for H_2 production of 150 kg/day with 6$/GJ gas. Experience shows that stack degradation requires stack replacement after roughly a year of steady operation, so the analysis includes a range of yearly maintenance costs. These costs are expressed as a percentage of the original capital cost, 20-50% per year. The resulting electricity costs 5-60¢/kWh.

Conclusions

The power system simulations predict both energy efficiency and cost of H_2 and electricity for a hybrid system like the one in demonstration at Las Vegas. At the production rate specified in the MYPP, the cost of H_2 can approach the 2005 target of 3$/kg. However, the analysis suggests that cutting this cost in half to reach the 2010 goal will require a significant reduction in the capital cost of reformers.

Future efforts will apply the simulation tool to the evolving system at SunLine and the system to be constructed at HNEI. Model development will enhance the existing library modules and add new modules for wind turbines and engine generators.

References

1. U. S. Department of Energy, "Hydrogen, Fuel Cells, and Infrastructure Technologies Program Multi-Year Research, Development, and Demonstration Plan," June, 2003.

2. Simulink. The MathWorks, Inc., MA (2002).

3. The CHEMKIN program and subroutine library are part of the Chemkin Collection, Release 3.7, Reaction Design, Inc., San Diego, CA (1999).

4. Lutz, A. E., Bradshaw, R. W., Keller, J. O., and Witmer, D. E., *Int. J. of Hydrogen Engy* 28 (2003) 159-167.

5. Lutz, A. E., Bradshaw, R. W., Bromberg, L., Rabinovich, R., *Int. J. of Hydrogen Engy* 29 (2004) 809-816.

6. Blok, K., Williams, R., Katofsky, R., Hendriks, C., *Int. J. of Hydrogen Engy* 22 (1997) 161-168.

7. Mintz, M., Folga, S., Gillette, J., Molburg, J., SAE paper 02FCC-155 (2002).

8. Dross, R., Plug Power, Inc., private communication (2004).

9. Wait, M., Air Products and Chemicals, Inc., private communication (2004).

FY 2004 Publications/Presentations

1. Lutz, A. E., Bradshaw, R. W., Bromberg, L., and Rabinovich, A., "Thermodynamic Analysis of Hydrogen Production by Partial Oxidation Reforming," *Int. J. of Hydrogen Engy* 29 (2004) 809-816.