Rapid Combustion Electrical Generator

Sandia National Laboratories

Peter Van Blarigan

Reciprocating Engines Peer Review

April 23-24, 2002

Chicago, Illinois

Background

Lean Burn Hydrogen Engine

Low NO_x

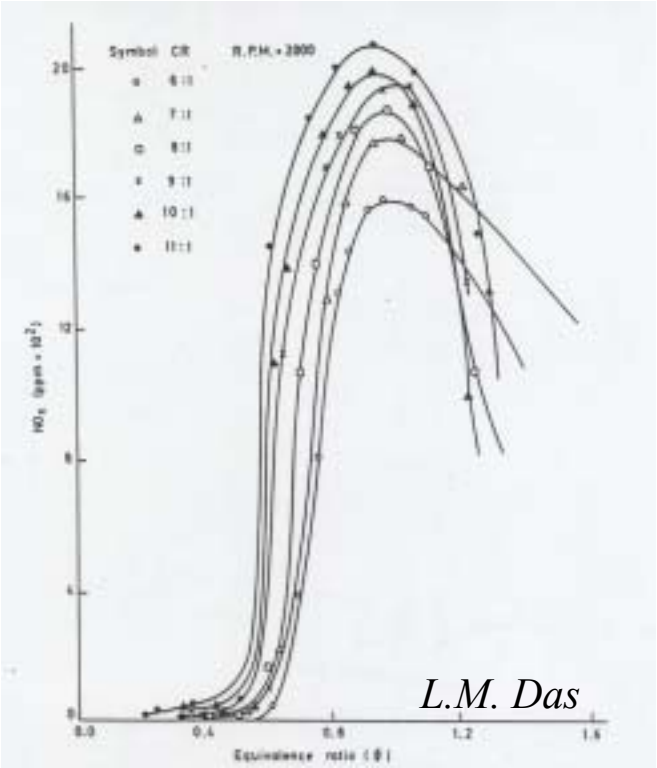

OTTO Cycle Departure

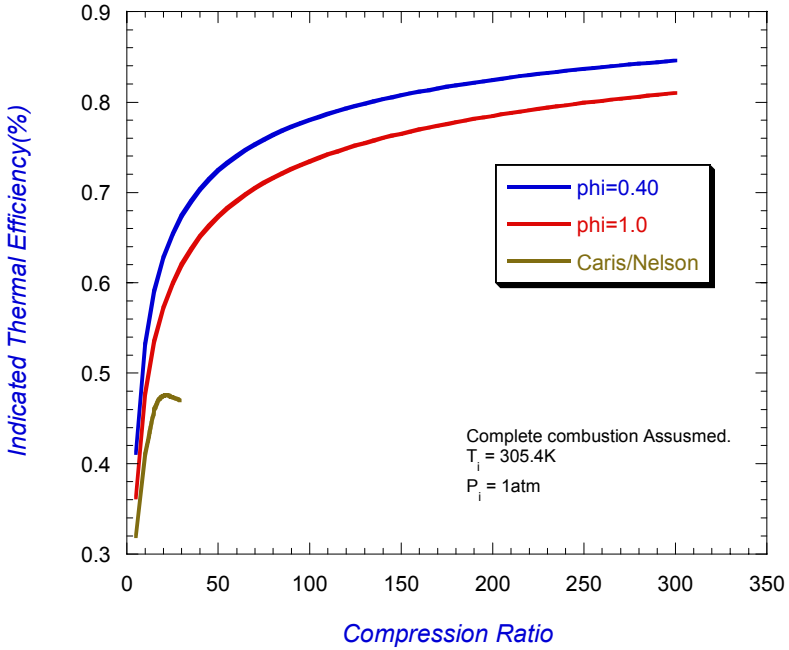

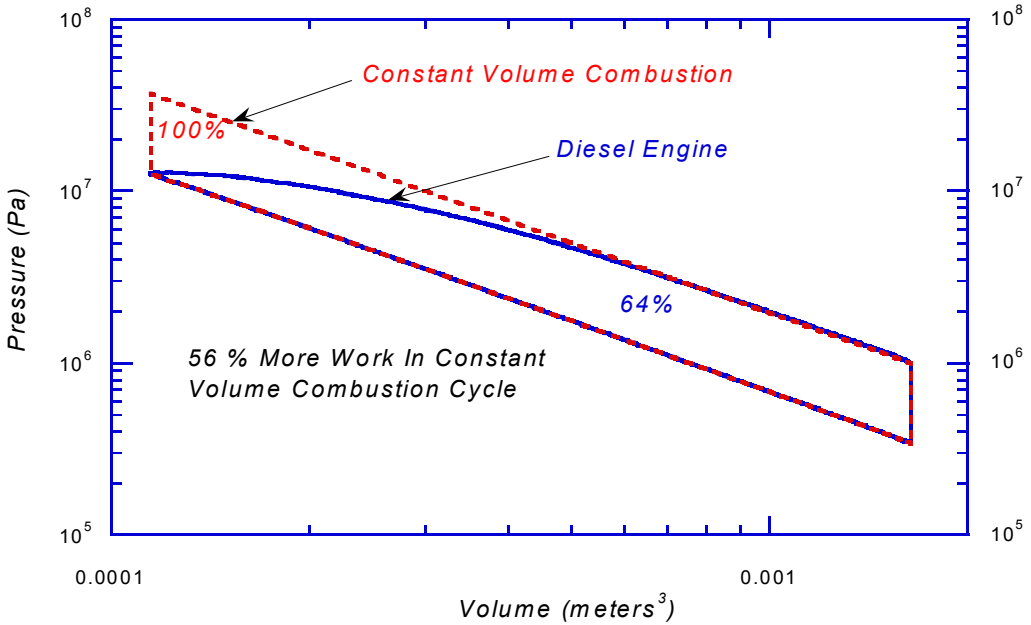

Lean Burn With NO_x Difficult With Hydrocarbon Fuels

Goal

- *Ideal OTTO Cycle-Constant Volume Combustion*
- *High Compression Ratio – 30:1*
- *≈ 0 - NO_x Engine Out*
- *Electricity Output – Constant Power*
- *Mechanically Simple*

Approach

- *Utilize Homogeneous Charge Compression Ignition(HCCI) to accomplish lean, ≈ 0 - NO_x output and constant volume combustion*

- *Control compression ratio for ignition timing and fuel flexibility*

- *Generate electricity directly from piston motion*

Free Piston Engine – Linear Alternator

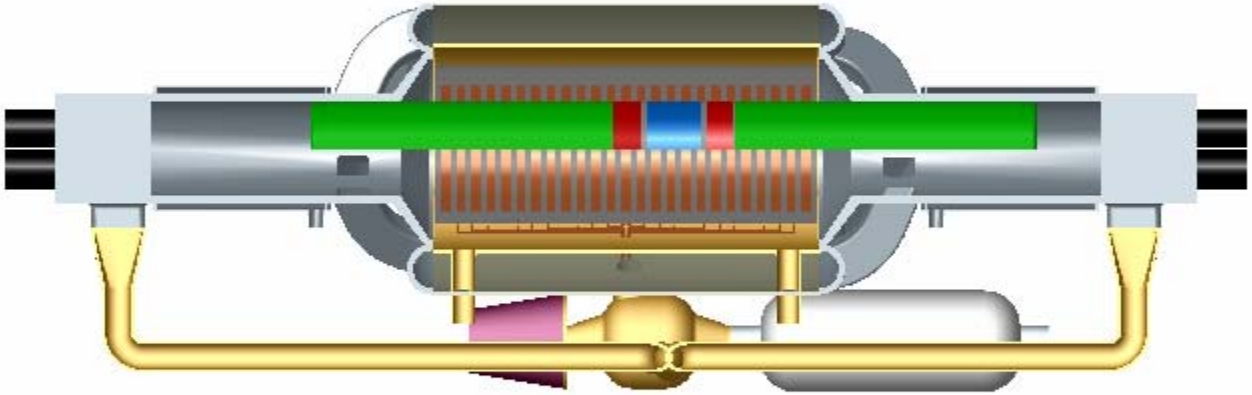

Advantages

- *Electronic control of compression ratio with no displacement penalty*

- *Tremendous fuel flexibility and NO_x control*
  - *Ammonia*
  - *Bio-Gas – low BTU*

- *Mechanical simplicity – no piston side loads*

- *Advantageous trajectory to minimize time at high temperature*

Program Plan

1. *Demonstrate combustion performance*

2. *Design and build prototype*
   A. *Linear alternator*
   B. *Two stroke cycle scavenging system*
   C. *Control electronics*

Autoignition Experiment Gas Manifold

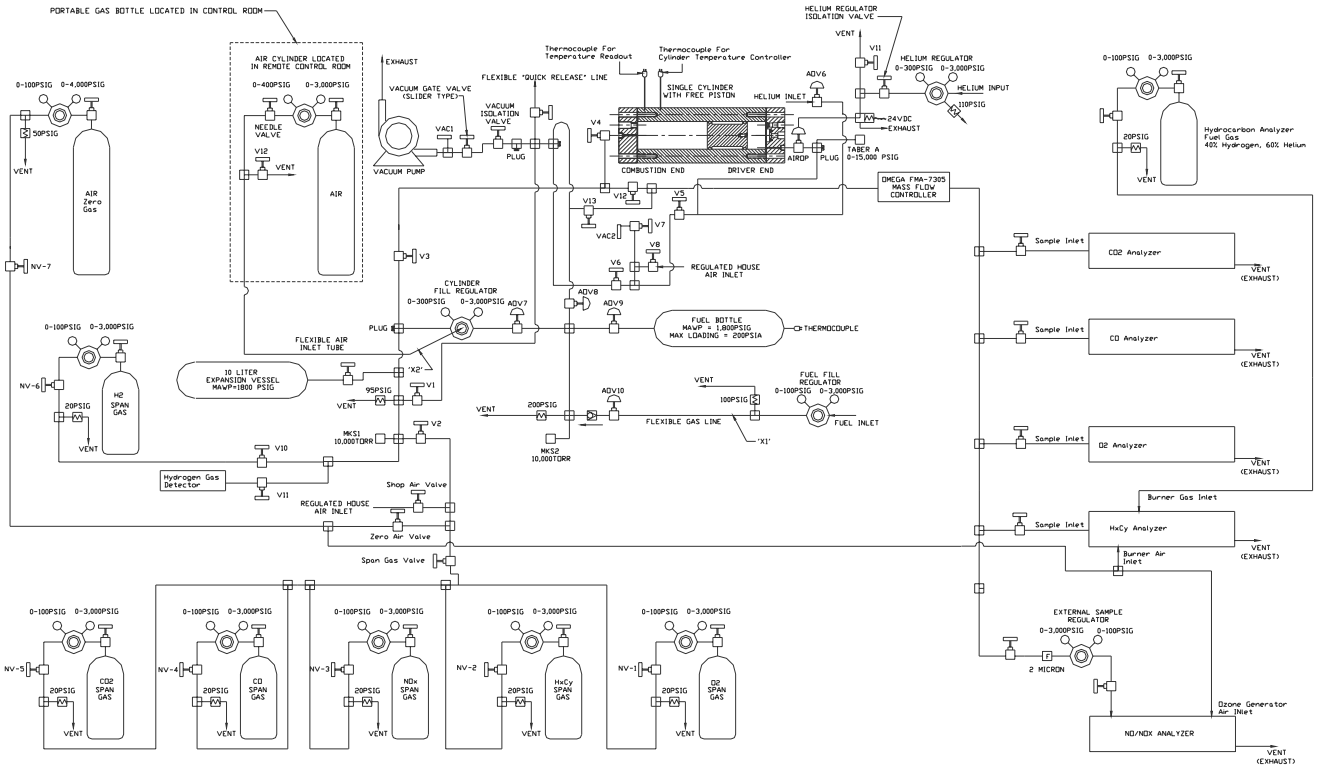

Combustion Experiment Test Cell

Piston Position vs. Time

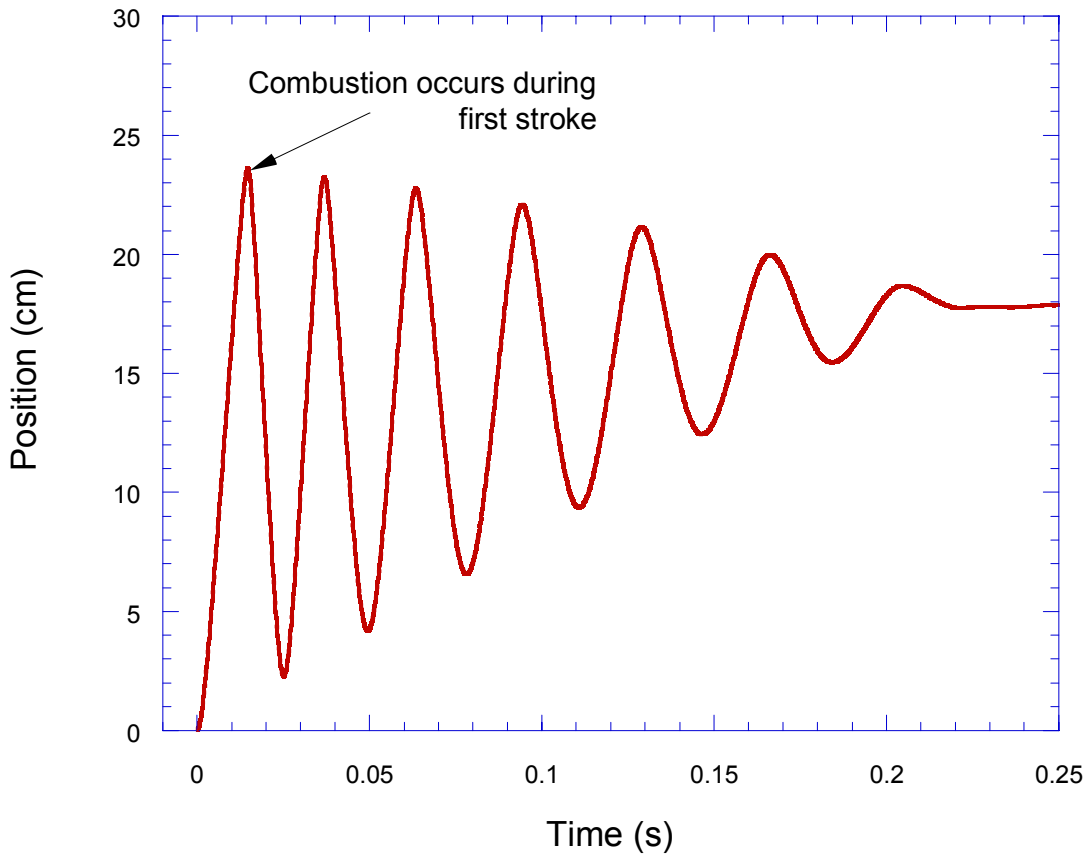

Cylinder Pressure & Piston Position vs. Time

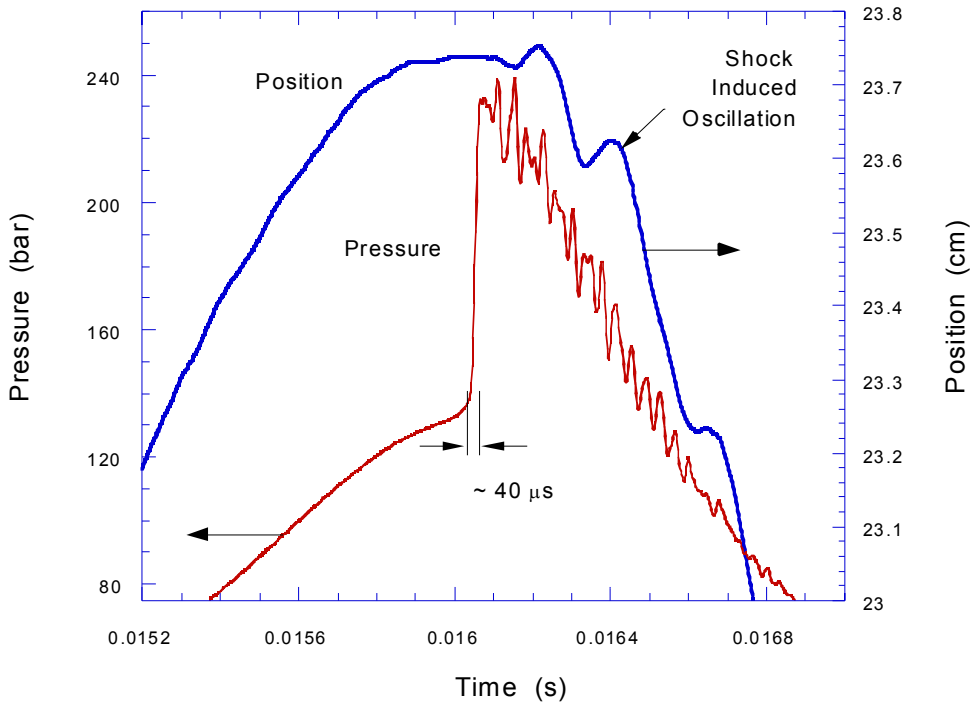

Hydrogen Fuel, Logarithmic Pressure-Volume Diagram

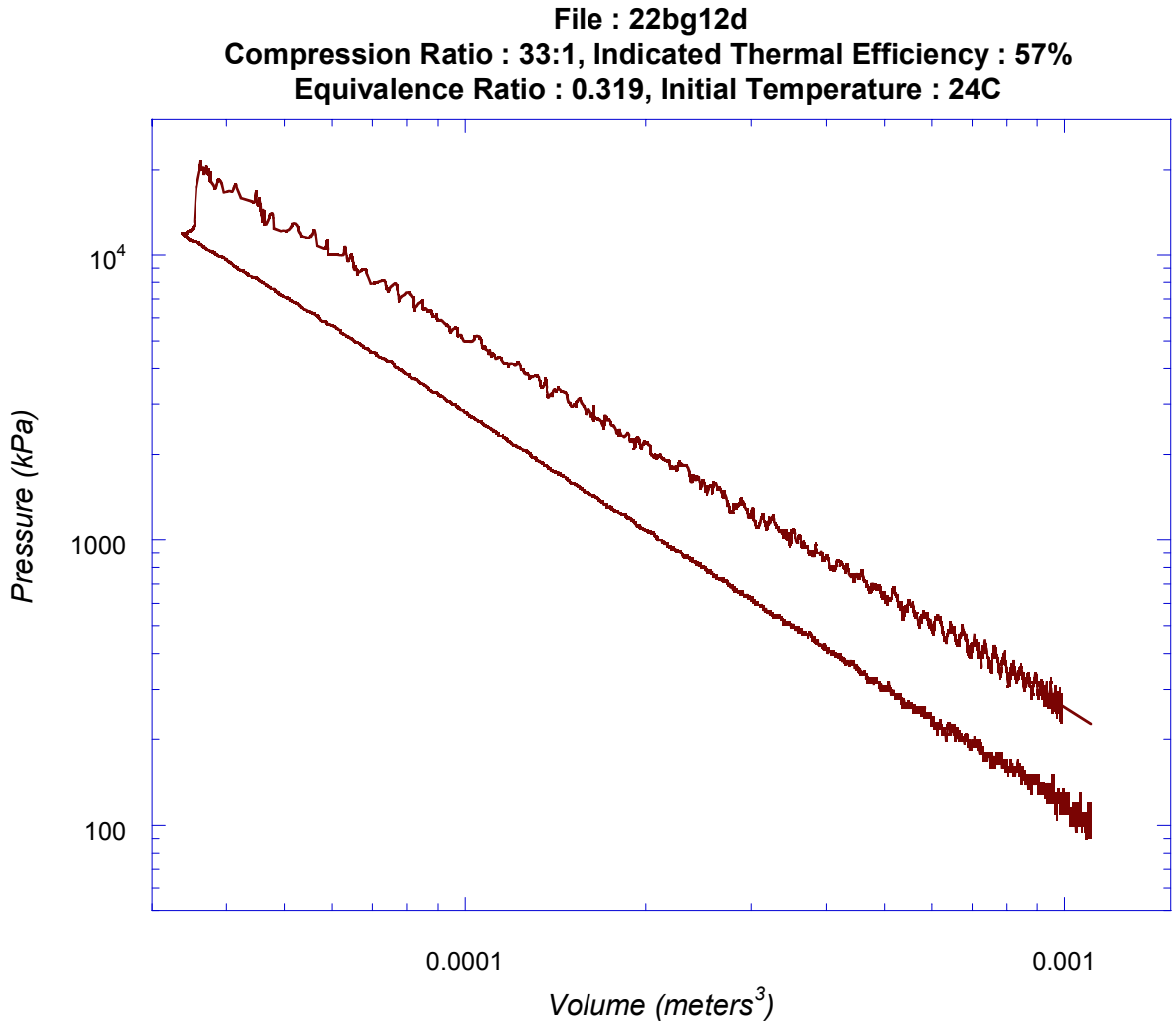

Natural Gas

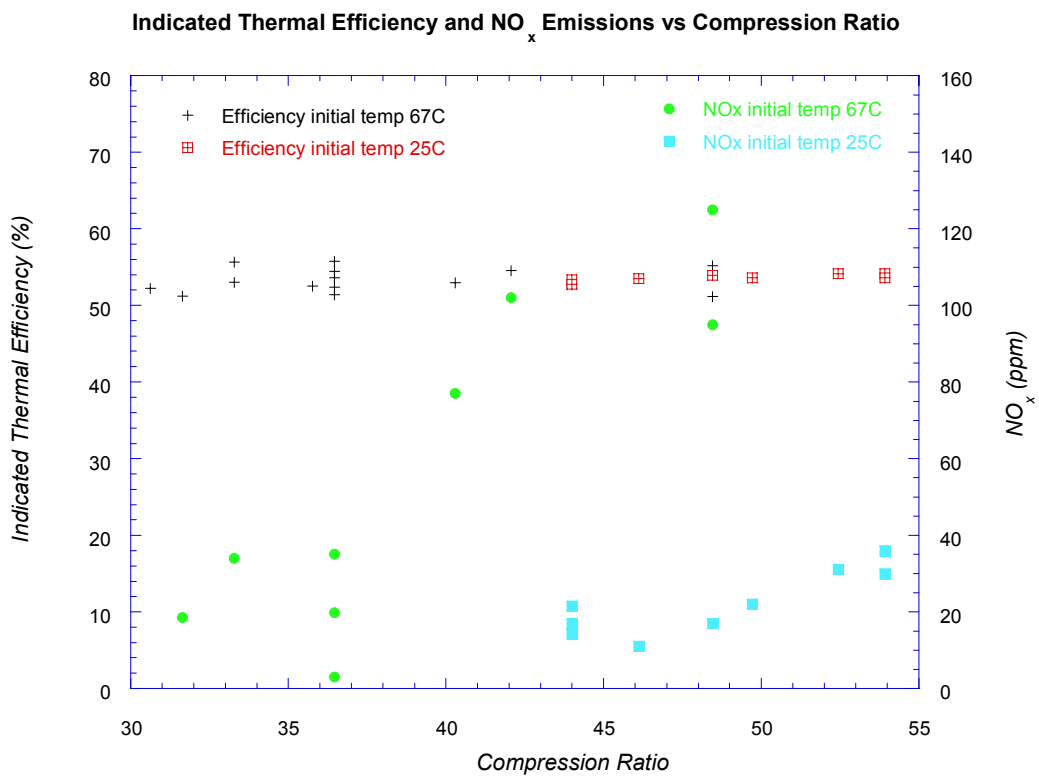
Indicated Thermal Efficiency and NO$_x$ Emissions vs Compression Ratio
Efficiency initial temp 67C
Efficiency initial temp 25C
NOx initial temp 67C
NOx initial temp 25C
Indicated Thermal Efficiency (%)
NO$_x$ (ppm)
Compression Ratio
0
10
20
30
40
50
60
70
80
0
20
40
60
80
100
120
140
160
30
35
40
45
50
55

Natural Gas

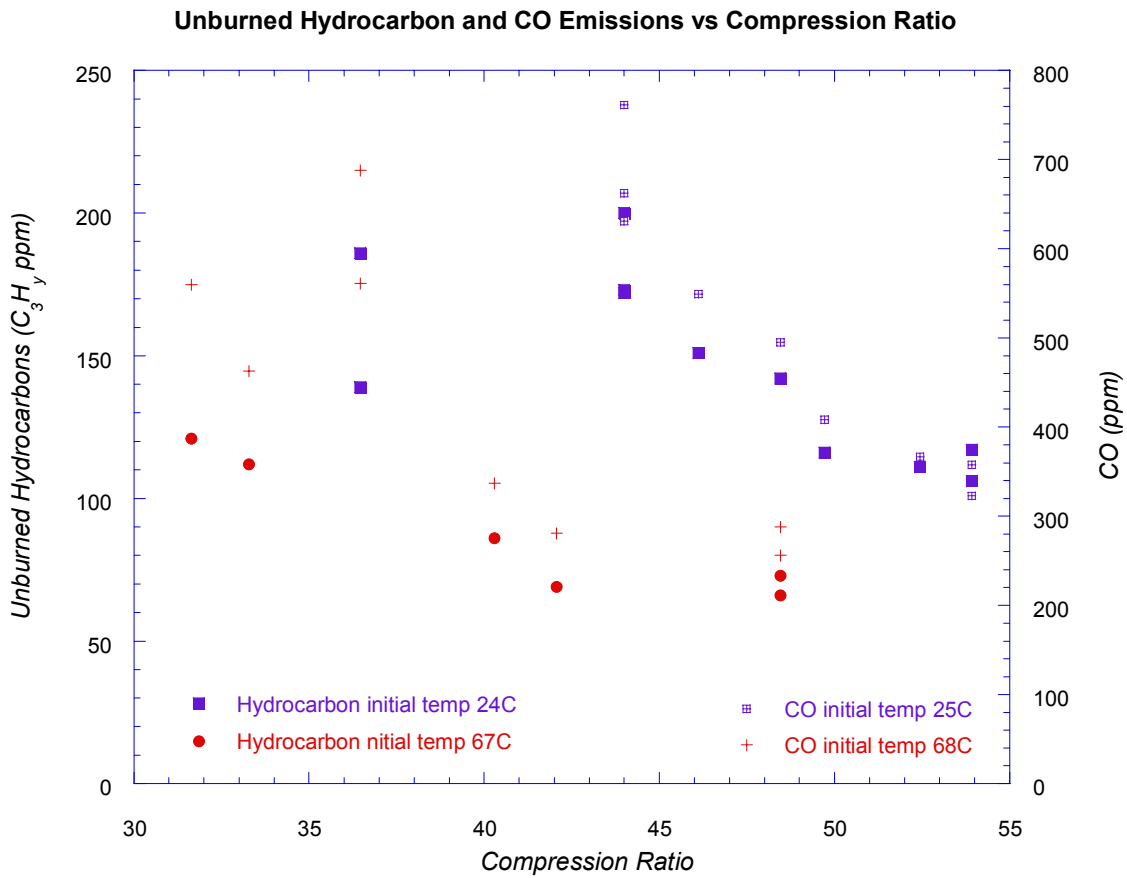

(0.8%)

Bio - Gas

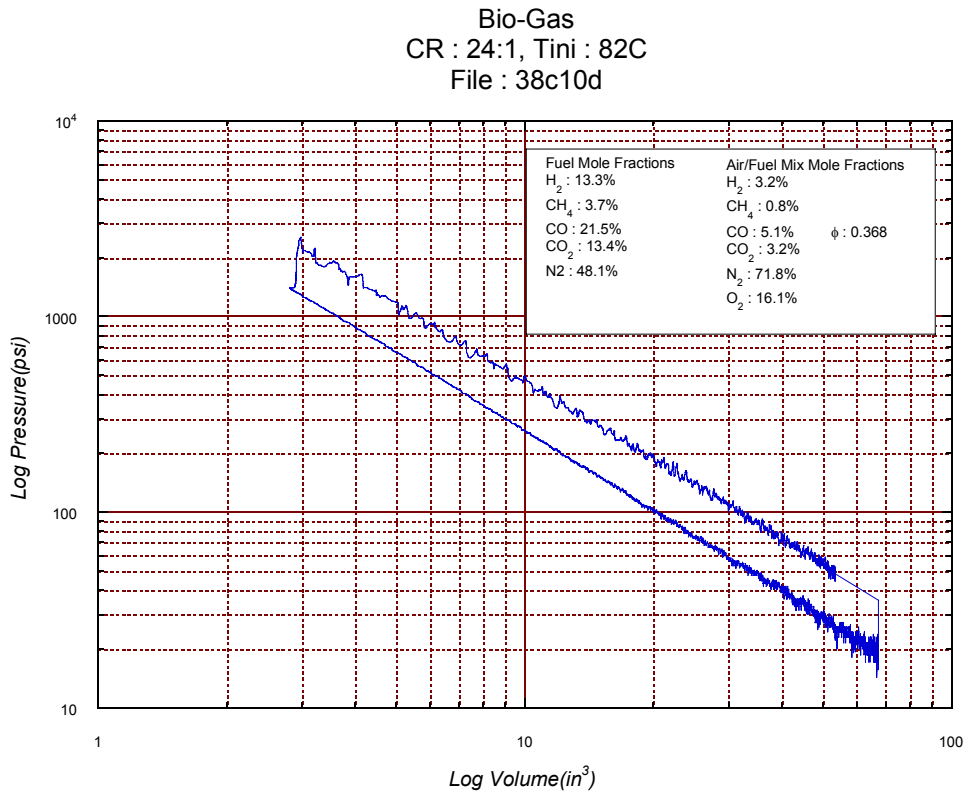
Bio-Gas
CR : 24:1, Tini : 82C
File : 38c10d
Fuel Mole Fractions
H2 : 13.3%
CH4 : 3.7%
CO : 21.5%
CO2 : 13.4%
N2 : 48.1%
Air/Fuel Mix Mole Fractions
H2 : 3.2%
CH4 : 0.8%
CO : 5.1%
CO2 : 3.2%
N2 : 71.8%
O2 : 16.1%
ϕ : 0.368
Log Pressure(psi)
10^4
1000
100
10
1
10
100
Log Volume(in^3)

Publications, Awards, Patents

SAE Paper 1999-01-0619

A Numerical Study of a Free Piston IC Engine Operating on Homogeneous Charge Compression Ignition Combustion

Peter Van Blarigan
S. Scott Goldsborough

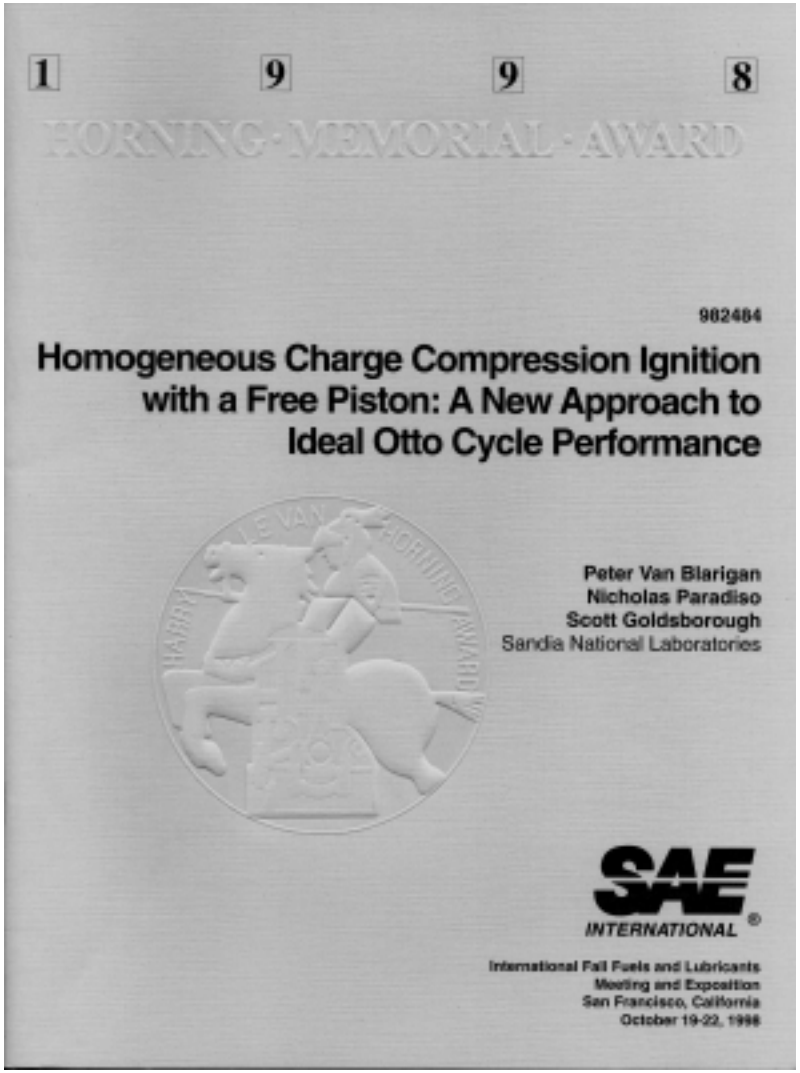

United States Patent

US 6,199,519, B1
Free-Piston Engine
March 13, 2001

Peter Van Blarigan

Alternator Design

Parallel Development Plan

In House

FLUX2D

Velocity Profile

Anisotropic Materials

I^2R Losses

Build & Test

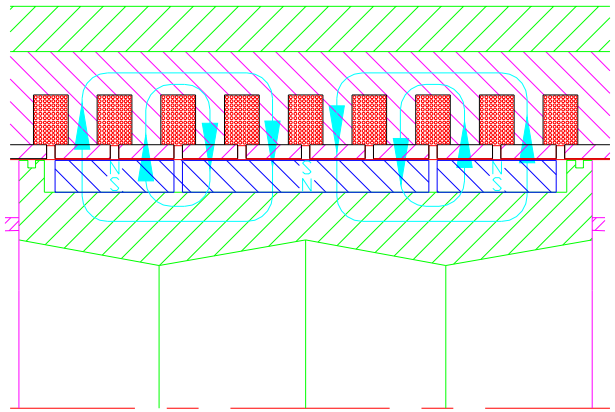

Magnequench

Design, fabricate and supply at no cost :

No other commercial development partners

Magnetic Properties Development

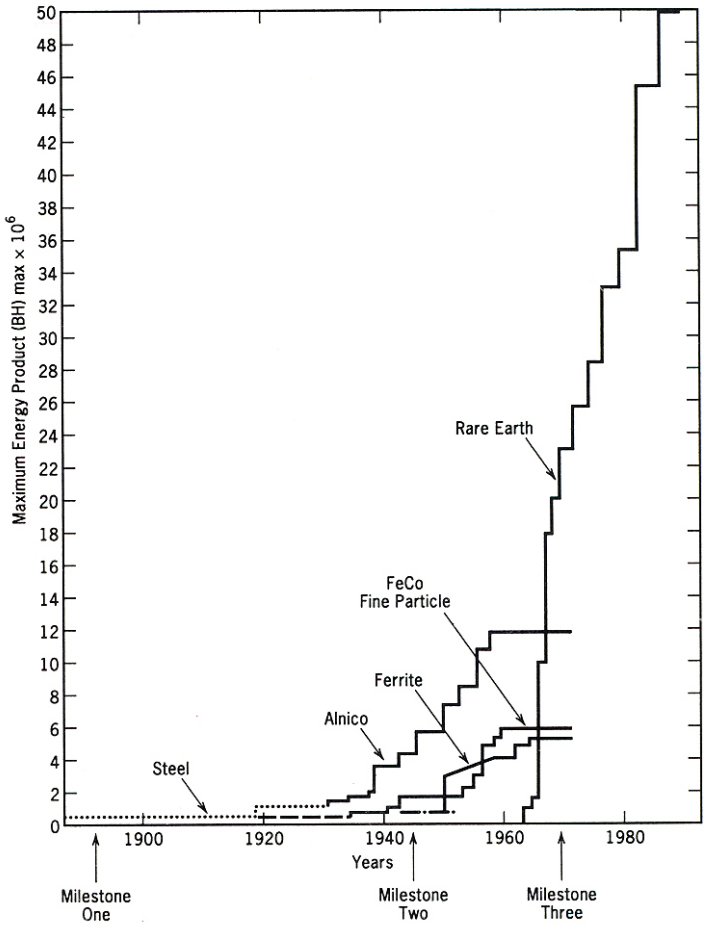

Linear Alternator Design

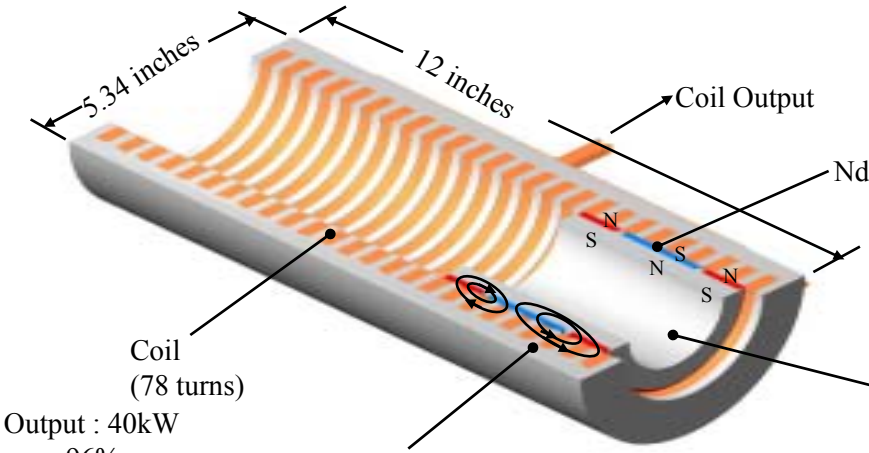

Power Output : 40kW
Efficiency : 96%
Weight 60 pounds

Magnequench Alternator Assembly

Linear Alternator Test Fixture

CFD Analysis of Cylinder & Port Flow

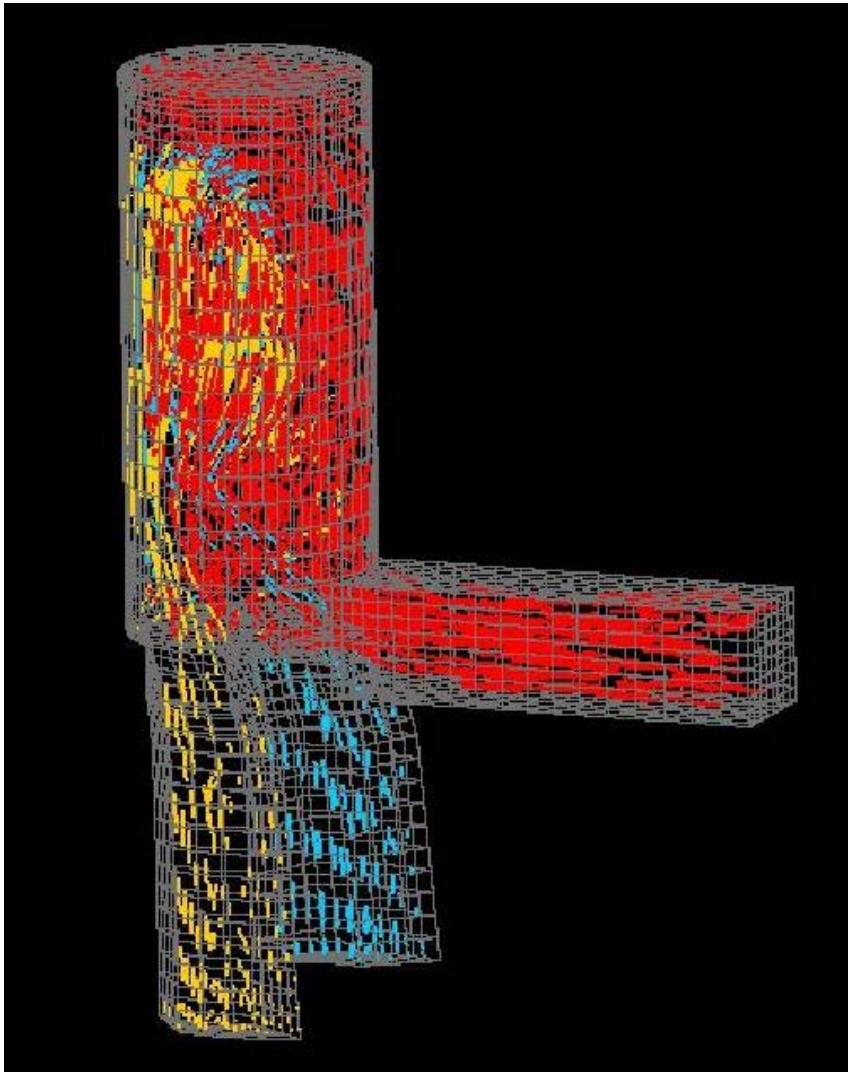

CFD Analysis of Cylinder Pressures

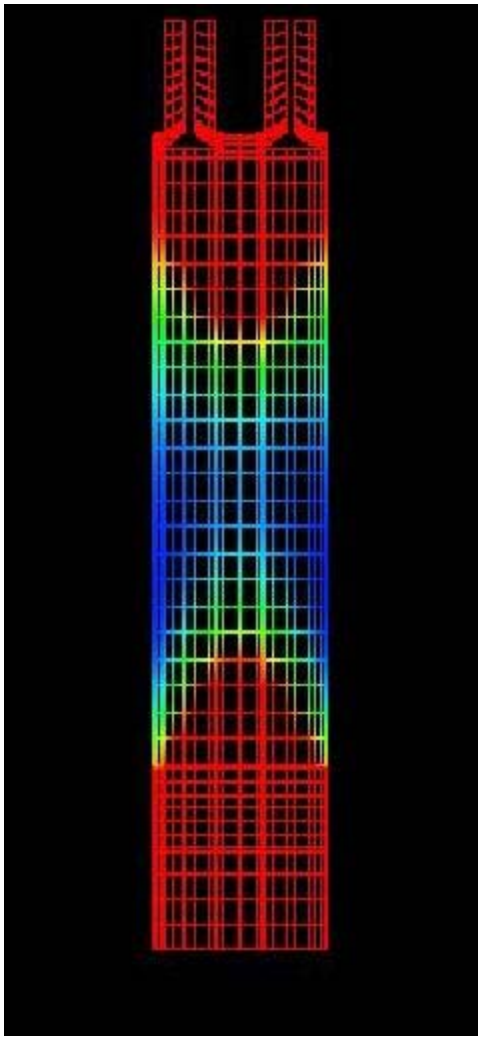

Scavenging Experiment

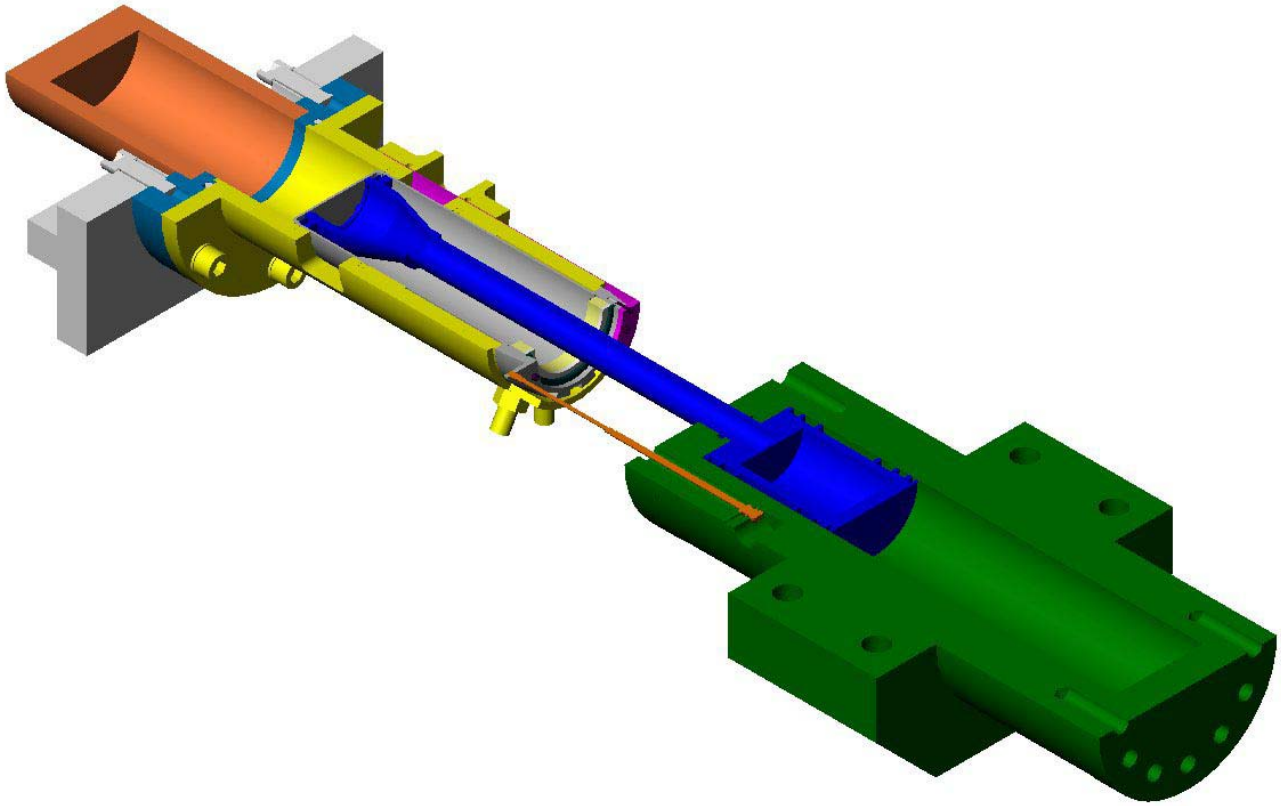

Free Piston-Linear Alternator Mounting Table

Cooperative Research

Caterpillar

Piston design and lubrication

Magnequench

Alternator design and fabrication

Unique Mobility

Power electronics and control system

Delphi

Exhaust valve control and operation

Milestones

Completed

- *Combustion performance*
- *Free piston/combustion model*
- *Scavenging system design*
- *Small combustion system*
- *Sizing/performance for aircraft*
- *Scavenging system experiment design*

Milestones

To Complete

- *Exhaust valve actuation*
- *Alternator testing / Mod 2 design*
- *Fuel injection system*
- *Hardware design / integration*
- *Control system / start up*

DOE 2010 Goals

High efficiency : 50% fuel to electricity based on experiments and practice

Environmental superiority : $\approx 0 - NO_x$

Reduced cost - ?

Fuel flexibility –
- *hydrogen*
- *ammonia*
- *low btu producer bio-gas*
- *lots more*

Reliability - ?

<u>Summary</u>

All goals can be met

Summary

- *Potential for a 20% increase in efficiency relative to existing engines*
- *Inherently low NOx and fuel flexibility*
- *Combustion system potential experimentally verified*
- *Progress being made on all fronts*

Risks

- *Lack of funding and staffing commitment to solve inevitable problems*
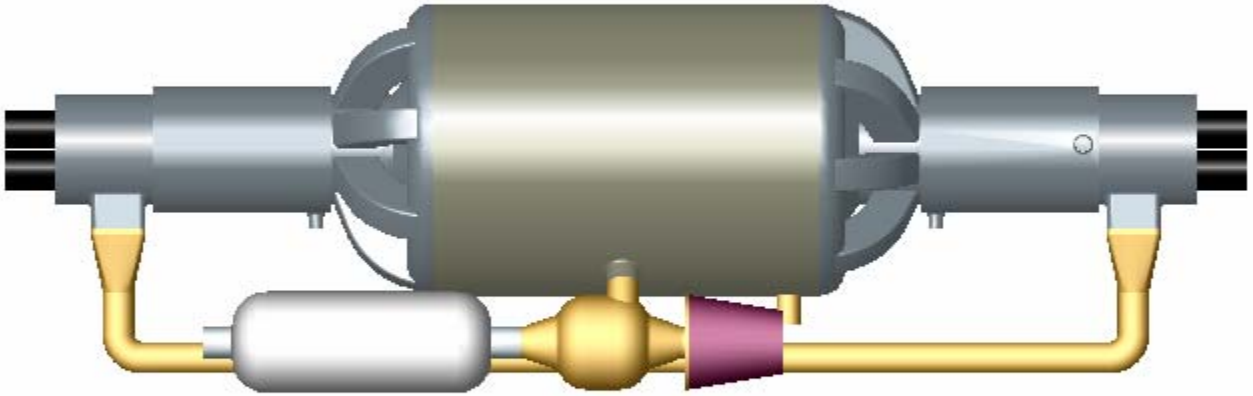
Free Piston-Linear Alternator