ENERGYPLUS™

Input Output Reference

The Encyclopedic Reference to EnergyPlus Input and Output

Date: November 25, 2002

COPYRIGHT © 1996-2002 THE BOARD OF TRUSTEES OF THE UNIVERSITY OF ILLINOIS AND THE REGENTS OF THE UNIVERSITY OF CALIFORNIA THROUGH THE ERNEST ORLANDO LAWRENCE BERKELEY NATIONAL LABORATORY.

ALL RIGHTS RESERVED. NO PART OF THIS MATERIAL MAY BE REPRODUCED OR TRANSMITTED IN ANY FORM OR BY ANY MEANS WITHOUT THE PRIOR WRITTEN PERMISSION OF THE UNIVERSITY OF ILLINOIS OR THE ERNEST ORLANDO LAWRENCE BERKELEY NATIONAL LABORATORY.

ENERGYPLUS IS A TRADEMARK OF THE US DEPARTMENT OF ENERGY.

TABLE OF CONTENTS

Input-Output Reference 1

What's different about EnergyPlus Input and Output? 1

IDD Conventions 1

Group -- Simulation Parameters 4

Version 5

TimeStep In Hour 5

Building 5

Figure 1. Illustration of Building North Axis 7

Figure 2. Illustration of Convex and Non-convex Zones 9

Airflow Model 9

Inside Convection Algorithm 10

Outside Convection Algorithm 11

Solution Algorithm Selection 11

Sky Radiance Distribution 12

Shadowing Calculations 12

Zone Volume Capacitance Multiplier 13

Run Control 13

Simulation Parameter Outputs 14

Group -- Location – Climate – Weather File Access 15

Location 15

RunPeriod 16

DesignDay 18

Figure 3. Daily range Multiplier for Design Days 19

SpecialDayPeriod 22

Table 1. Date Field Interpretation 23

DaylightSavingPeriod 24

TABLE OF CONTENTS

GroundTemperatures 25

GroundReflectances 27

Snow Ground Reflectance Modifiers 29

Climate Group Outputs 30

Weather Data Related Outputs 31

Figure 4. Solar Position Illustration 34

Table 2. Relationship of Angles (degrees) to Time 34

Group -- Schedules 34

Day Type 35

ScheduleType 35

DaySchedule 36

WeekSchedule 37

Schedule 38

Schedule Outputs 41

Group – Surface Construction Elements 41

Specifying the Building Envelope 41

Materials 41

Material:Regular 42

Material:Regular-R 44

Material:Air 45

MaterialProperty:Moisture:MTF 46

MaterialProperty:Moisture:EMPD 48

Materials for Glass Windows and Doors 50

Material:WindowGlass 50

Material:WindowGlass:AltInput 54

Conversion from Glass Optical Properties Specified as Index of Refraction and Transmittance at Normal Incidence 55

TABLE OF CONTENTS

Material:WindowGas 56

Material:WindowGasMixture 58

Material:WindowShade 61

Figure 5. Vertical section (a) and perspective view (b) of glass and interior shade layers showing variables used in the gap air flow analysis. In (b), the air-flow opening areas A_{bot}, A_{top}, A_l, A_r and A_h are shown schematically. See *Engineering Manual* for definition of thermal variables. 63

Figure 6. Examples of air-flow openings for an interior shade covering glass of height *H* and width *W*. Not to scale. (a) Horizontal section through shade with openings on the left and right sides (top view). (b) Vertical section through shade with openings at the top and bottom (side view). In (a) Left-Side Opening Multiplier = A_l/sH = min(l/s,1) and Right-Side Opening Multiplier = A_r/sH = min(r/s,1). In (b) Top Opening Multiplier = A_{top}/sW = t/s and Bottom Opening Multiplier = A_{bot}/sW = b/s. 63

Material:WindowBlind 65

Figure 7. (a) Side view of a window blind with horizontal slats (or top view of blind with vertical slats) showing slat geometry. The front face of a slat is shown by a heavy line. The slat angle is defined as the angle between the glazing outward normal and the slat outward normal, where the outward normal points away from the front face of the slat. (b) Slat orientations for representative slat angles. The slat angle varies from 0°, when the front of the slat is parallel to the glazing and faces toward the outdoors, to 90°, when the slat is perpendicular to the glazing, to 180°, when the front of the slat is parallel to the glazing and faces toward the indoors. The minimum and maximum slat angles are determined by the slat thickness, width and separation. .. 72

WindowGlassSpectralData 72

Construction 75

Figure 8. Floor 38 illustration 76

Figure 9. Illustration for material ordering in Windows 77

Construction With Internal Source 78

Construction from Window5 Data File 81

Construction Element Outputs 82

Group – Thermal Zone Description/Geometry 83

Zone 83

Figure 10. Illustration of Zone North Axis and Origins 84

Zone Outputs 86

TABLE OF CONTENTS

Surface(s) 87

Interzone Surfaces 88

Surface View Factors 89

SurfaceGeometry 89

Figure 11. EnergyPlus Coordinate System 90

Surface Vertices 91

Figure 12. Illustration for Surface Vertices 92

Surface:HeatTransfer 92

Surface:HeatTransfer:Sub 96

Surface:HeatTransfer:InternalMass 100

Figure 13. Representing 11 internal walls as internal mass 101

Surface Output Variables/Reports 102

Figure 14. Vertical window showing solar horizontal profile angle, solar vertical profile angle and solar incidence angle. 107

Figure 15. Example of a DXF drawing view 109

Shading Surfaces 110

Surface:Shading:Detached, Surface:Shading:Detached:Fixed, Surface:Shading:Detached:Building 110

Surface:Shading:Attached 112

Figure 16. Illustration for Attached Shading Surface 113

WindowShadingControl 114

WindowFrameAndDivider 123

Figure 17. A window with a frame and divider. 125

Figure 18. Illustration showing frame and divider dimensioning. 126

Figure 19. Illustration showing divider types. 127

Figure 20. (a) Vertical section through a window (with frame) showing outside and inside reveal surfaces and inside sill. (b) Perspective view looking from the outside of a window (without frame) showing reveal surfaces. Note that “Outside Reveal Depth”

TABLE OF CONTENTS

is not a user input; it is calculated by the program from the window and wall vertices. 130

Importing Windows from WINDOW 5 133

Figure 21. Window5 Glazing system with dual glazing constructions135

Other Side Coefficients 138

Figure 22. Illustration for Other Side Coefficients 141

Movable Insulation 141

Zone Thermal Output(s) 142

Group – Space Gains 144

People 144

Table 3. Metabolic Rates for Various Activities 145

People Output 148

Lights 150

Lights Output 152

Meters for Lights Outputs 154

Table 4. Distribution of Lights to Meters 154

Electric Equipment 154

Gas Equipment 155

Other Equipment, Hot Water Equipment, Steam Equipment 157

Electric, Gas, Other, Hot Water, Steam Equipment Output(s) 157

Baseboard Heat (Outside Temperature Controlled) 159

Table 5. Outdoor Temperature Controlled Baseboard Heat Temperature vs. Capacity 160

Baseboard Heat Output 161

Meters for Equipment Outputs 162

Table 6. Distribution of Equipment to Meters 162

Daylighting 162

TABLE OF CONTENTS

Daylighting:Detailed 163

Table 7. Stepped Lighting Control Example 164

Table 8. Recommended Values -- Discomfort Glare Index 165

Figure 23. Illustration of continuous dimming relationship..... 165

Figure 24. Stepped lighting control with Number of Steps = 3. 166

Figure 25. For daylighting purposes the thermal zone enclosed by the dashed boundary line should be modeled as a typical zone (Room-1) with a zone multiplier of 4..... 169

Figure 26. Rooms A, B, C and D have different daylighting characteristics. If lumped into a single thermal zone the daylighting calculation will be inaccurate because the blockage of direct light by the interior walls between these rooms will not be taken into account. To get a good daylighting calculation each room should be input as a separate thermal zone..... 169

Figure 27. Two independently-controlled lighting zones, each with 50% of the area of the thermal zone..... 170

Figure 28. A thermal zone with four rooms. Only room A, with 40% of the floor area, is daylit. EnergyPlus does not model daylighting through the interior windows between A and the back rooms, B, C and D. 170

Daylighting:Simple 171

Daylighting Output..... 172

Group – ExteriorEnergyUse Equipment..... 173

ExteriorLights 173

ExteriorLights Output 173

ExteriorFuelEquipment..... 174

ExteriorWaterEquipment 175

ExteriorFuelEquipment, ExteriorWaterEquipment Outputs 175

Group – AirFlow 176

Infiltration..... 176

Infiltration Output..... 178

Ventilation 178

Ventilation Output..... 181

TABLE OF CONTENTS

Mixing 181

Mixing Output 182

Cross Mixing 183

Cross Mixing Output 184

Overview of the COMIS/EnergyPlus Link 184

Figure 29. Relationship among COMIS objects (right-hand side) and between COMIS objects and regular EnergyPlus objects. Arrows indicate references from one object to another. 186

Figure 30. Plan view of a simple air flow network showing a possible air flow pattern in which all of the windows and doors are open. 187

COMIS/EnergyPlus Sample Run 187

What COMIS/EnergyPlus Can and Cannot Do 187

Figure 31. Air-flow network that is illegal in COMIS because there are two separate groups of zones with air flow (one group is Zone-2 plus Zone-3 and the other is Zone-1). To make this legal a link (a crack or opening) between Zone-1 and Zone-2 would have to be added or the zones in one of the groups would have to be “turned off” as COMIS zones. 188

Description of the COMIS Input Objects 189

COMIS Simulation 189

COMIS Air Flow:Crack 194

COMIS Standard Conditions for Crack Data 196

COMIS Air Flow: Opening 197

Figure 32. Window (or door) showing geometrical factors associated with an opening through which air flows. 200

COMIS Surface Data 203

COMIS Zone Data 205

Figure 33. Modulation of venting area according to inside-outside temperature difference. 208

Figure 34. Modulation of venting area according to inside-outside enthalpy difference. 209

COMIS Site Wind Conditions 210

TABLE OF CONTENTS

COMIS External Node 211

COMIS CP Array 212

COMIS CP Values 213

Figure 35. Plan view of a building with a rectangular footprint showing wind-related angles for the east façade. The wind direction angle is measured clockwise from North. The façade azimuth is the angle, measured clockwise, between North and the façade outward normal. The wind incidence angle is the angle, measured clockwise, between the façade outward normal and the wind direction. 215

Table 9. Cp values for the facades of a building with a rectangular footprint (see Figure 35)*. 215

Figure 36. Plan view of a building with a rectangular footprint showing wind-related angles for the roof (assumed flat and horizontal). The wind direction angle is measured clockwise from North. The roof azimuth is the angle, measured clockwise, between North and the outward normal of a façade of width *W*. The wind incidence angle is the angle, measured clockwise, between the façade outward normal and the wind direction. 216

Table 10. Cp values for the horizontal roof of a building with a rectangular footprint (see Figure 36).* 216

Figure 37. Plan of a building with an 80m x 20m rectangular footprint. In determining wind pressure coefficients, the facades have either L/W = 4 or L/W = 1/4. 217

COMIS Standard Conditions for Crack Data 217

The COMIS Input File 218

Figure 38. Sample COMIS input file, eplusout.cif, produced by COMIS/EnergyPlus. This sample differs from the actual file in that reference line numbers have been added and blank space in some of the lines has been removed to avoid line wrapping. For what's in this file, see "Description of Contents of Sample COMIS Input File." 220

EnergyPlus/COMIS Output Variables 222

Table 11. Value of opening factor multiplier for different venting conditions. 223

Group – Design Objects 225

Input for Design Calculations and Component Autosizing 225

Table 12. Details of Autosizable Objects/Fields 226

Sizing Parameters 230

Sizing Parameters Outputs 230

TABLE OF CONTENTS

Zone Sizing 230

Zone Sizing Outputs 234

System Sizing 234

System Sizing Outputs 237

Plant Sizing 237

Plant Sizing Outputs 238

HVAC: Primary and Secondary Systems 238

Figure 39. Example Node Diagram 239

Group – Node-Branch Management 240

Node List 240

Node List Output 241

Branch List 241

Branch List Output 242

Branch 242

Branch Output 244

Connector List 244

Connector List Output 245

Pipe 246

Pipe Output 246

Group – Plant-Condenser Loops 246

Plant Loop 246

Figure 40. Plant Loop Input Syntax Map 247

Plant Loop Outputs 250

Condenser Loop 250

Figure 41. Condenser Loop Input Syntax Map 251

Condenser Loop Outputs 255

TABLE OF CONTENTS

Connection Component:PlantLoop 255

Connection Component:PlantLoop Outputs 257

Heat Recovery Loop 257

Figure 42. Heat Recovery Loop Schematic 258

Group – Plant-Condenser Control 259

Operation Schemes (Plant and Condenser) 259

Plant Operation Schemes 260

Condenser Operation Schemes 261

Load Range Based Operation 261

Load Range Equipment List 263

Group – Plant-Condenser Equipment 264

Equipment Types (Plant and Condenser) 264

Generic Chiller Outputs 264

Chiller: Absorption 267

Absorption Chiller Outputs 271

Chiller:CONST COP 271

Constant COP Chiller Outputs 273

Chiller:Electric 274

Electric Chiller Outputs 279

Chiller:EngineDriven 279

Engine Driven Chiller Outputs 287

Chiller:Gas Turbine 289

Gas Turbine Chilller Outputs 297

Chiller:Gas Absorption 298

Gas Absorption Chiller Outputs 305

Boiler: Simple 307

TABLE OF CONTENTS

Boiler Outputs 310

WaterHeater: Simple 311

Water Heater Outputs 315

HeatPump:WaterToWater Cooling & HeatPump:WaterToWater Heating318

Figure 43. Schematic of EnergyPlus Ground Loop Heat Exchanger318

Purchased: Chilled Water 323

Purchased Chilled Water Outputs 324

Purchased: Hot Water 324

Purchased Hot Water Outputs 325

Pump:Variable Speed 325

Variable Speed Pump Outputs 328

Pump:Constant Speed 329

Constant Speed Pump Outputs 330

Cooling Tower:Single Speed 330

Cooling Tower:Single Speed Outputs 335

Cooling Tower:Two Speed 335

Cooling Tower:Two Speed Outputs 341

Ground Heat Exchanger:Vertical 342

Figure 44. Schematic of EnergyPlus Ground Loop Heat Exchanger343

Ground Heat Exchanger:Pond 347

Figure 45. Example of Pond Ground Heat Exchanger as only heat exchanger on condenser loop 348

Figure 46. Pond Ground Heat Exchanger with other heat exchangers on condenser loop 348

Pond Heat Exchanger Outputs 351

Ground Heat Exchanger:Surface 351

Figure 47. Example of Surface Ground Heat Exchanger as only heat exchanger on condenser loop 352

TABLE OF CONTENTS

Figure 48. Surface Ground Heat Exchanger with other heat exchangers on condenser loop 352

Surface Heat Exchanger Outputs 354

Group – Plant-Condenser Flow Control 355

Splitter,Mixer 356

Splitter 356

Mixer 356

Group – Air Distribution 357

Air Primary Loop 357

Figure 49. Air Loop Input Syntax Map 360

Controller List 360

System Availability Manager List 361

Outside Air System 362

Air Loop Equipment List 364

Outside Air Inlet Node List 365

Outside Air Mixer 366

Group – Zone Equipment 367

Figure 50. Zone Equipment Input Syntax Map 368

Figure 51. Zone Equipment 369

Figure 52. Air Loop/Zone Equipment Node Diagram 369

Air Distribution Unit 370

Controlled Zone Equip Configuration 371

Zone Equipment List 372

Group – Zone Controls and Thermostats 373

Zone Control:Humidistat 373

Zone Control:Humidistat Outputs 374

Zone Control:Thermostatic 374

TABLE OF CONTENTS

Zone Thermostats 377

Single Heating Setpoint 378

Single Cooling Setpoint 378

Single Heating Cooling Setpoint 378

Dual Setpoint with Deadband 378

Group -- Air Path 379

Zone Supply Air Path, Zone Return Air Path 379

Zone Supply Air Path 379

Zone Return Air Path 380

Zone Return Plenum 381

Figure 53. Illustration of Zone Return Plenum 381

Zone Supply Plenum 382

Figure 54. Illustration of Zone Supply Plenum 383

Zone Mixer, Zone Splitter 384

Zone Splitter 384

Zone Mixer 385

Group -- Coils 385

Figure 55. Example Air Loop Heating & Cooling Coil 386

Coil:Water:SimpleCooling 386

Simple Cooling Water Coil Outputs 387

Coil:Water:SimpleHeating 387

Simple Heating Water Coil Outputs 388

Coil:Electric:Heating 388

Electric Heating Coil Outputs 389

Coil:Gas:Heating 389

Gas Heating Coil Outputs 391

TABLE OF CONTENTS

Coil:Water:DetailedFlatCooling 392

Figure 56. Geometry of a Cooling Coil (CC)..... 393

Figure 57.Number of Coolant Circuits (CCNCC)..... 394

Detailed Water Coil Outputs..... 397

Coil:DX:CoolingBypassFactorEmpirical 397

DX Cooling Coil Outputs 402

Coil:DX:HeatingEmpirical..... 403

DX Heating Coil Outputs 411

Group – Fans 412

Table 13. Fan Coefficient Values 412

Fan:Simple:Const Volume 412

Simple Constant Volume Fan Outputs..... 413

Fan:Simple:OnOff 413

OnOff Fan Outputs..... 415

Fan:Simple:Variable Volume..... 415

Simple Variable Volume Fan Outputs 417

Zone Exhaust Fan..... 417

Zone Exhaust Fan Outputs 419

Group -- Humidifiers..... 419

Humidifier:Steam:Electrical 419

Humidfier:Steam:Electrical Outputs 421

Group – Desiccant Dehumidifiers 421

Desiccant Dehumidifier:Solid 421

Solid Desiccant Dehumidifier 428

Group – Air Distribution Units..... 428

Dual Duct:Const Volume..... 429

TABLE OF CONTENTS

Dual Duct:VAV 430

Single Duct:Const Volume:Reheat 431

Single Duct:VAV:Reheat 433

Single Duct:Series PIU:Reheat 436

Single Duct:Series PIU:Reheat Outputs 440

Single Duct:Parallel PIU:Reheat 440

Single Duct:Parallel PIU:Reheat Outputs 445

Group – Local Convective Units 445

Purchased Air 445

Purchased Air Outputs 446

Direct Air 446

Fan Coil Unit: 4 Pipe 448

Fan Coil Outputs 452

Unit Ventilator 453

Unit Ventilator Outputs 461

Unit Heater 462

Unit Heater Outputs 465

Furnace and Unitary Systems 466

Furnace:BlowThru:HeatOnly 466

Figure 58. Schematic of EnergyPlus Furnace Model 466

Furnace:BlowThru:HeatOnly Outputs 470

Furnace:BlowThru:HeatCool 470

Figure 59. Schematic of EnergyPlus Heat/Cool Furnace 470

Figure 60. Schematic of Blow Thru Furnace with High Humidity Control 475

Furnace:BlowThru:HeatCool Outputs 477

UnitarySystem:BlowThru:HeatOnly 477

TABLE OF CONTENTS

Figure 61. Schematic of EnergyPlus Heat-Only Unitary System..... 478

Unitary System:BlowThru:HeatOnly Outputs 482

UnitarySystem:BlowThru:HeatCool..... 482

Figure 62. Schematic of EnergyPlus Heat/Cool Unitary System..... 482

Figure 63. Schematic of Blow Thru Unitary System (HeatCool) with High Humidity Control 487

UnitarySystem:BlowThru:HeatCool Outputs 489

UnitarySystem:HeatPump:AirToAir 490

Figure 64. Schematic of EnergyPlus Unitary Air-to-Air Heat Pump. 490

UnitarySystem:HeatPump:AirToAir Example Specification..... 496

UnitarySystem:HeatPump:AirToAir Outputs 497

Air Conditioner:Window:Cycling 498

Air Conditioner:Window:Cycling Outputs 502

DXSystem:AirLoop 503

Figure 65. Schematic of EnergyPlus DX System in Air Loop 504

DXSystem:AirLoop Outputs 505

Group – Radiative Convective Units 506

Baseboard Heater:Water:Convective..... 506

Baseboard Heater Outputs 507

Low Temp Radiant System:Hydronic..... 507

Hydronic Low Temperature Radiant System Outputs..... 511

Low Temp Radiant System:Electric 512

Electric Low Temperature Radiant System Outputs 514

High Temp Radiant System 514

High Temperature Radiant System Outputs 520

Group – System Availability Managers 521

System Availability Manager:Scheduled 521

TABLE OF CONTENTS

System Availability Manager:Night Cycle 522

Group – Set Point Managers 523

Set Point Manager:Scheduled 523

Set Point Manager:Outside Air 524

Set Point Manager:SingleZone Reheat 526

Set Point Manager:Single Zone Min Hum 528

Set Point Manager:Mixed Air 529

Set Point Manager:Warmest 531

Group – Controllers 533

Controls (Air Loop and Zone Equipment) 533

Controller:Simple 533

Controller:Outside Air 535

Controller:Zone Loop (Not Applicable) 538

Group – Evaporative Coolers 538

EvapCooler:Direct:CelDekPad 538

Figure 66. Direct Stage Evaporative Cooler 539

Figure 67. Psychrometric Chart -- Constant Enthalpy 539

EvapCooler:Direct:CelDekPad Outputs 541

EvapCooler:InDirect:CelDekPad 541

Figure 68. Evaporative Cooler -- Indirect Dry Coil 541

Figure 69. Secondary Air Process -- Indirect Dry Coil Evap Cooler 542

EvapCooler:InDirect:CelDekPad Outputs 544

EvapCooler:InDirect:WetCoil 544

Figure 70. Evaporative Cooler -- Wet Coil 544

Figure 71. Secondary Air Process – Indirect Wet Coil Evap Cooler 545

EvapCooler:InDirect:WetCoil Outputs 546

TABLE OF CONTENTS

Group – Heat Recovery 547

Heat Exchanger:Air to Air:Flat Plate 547

Heat Exchanger:Air to Air:Flat Plate Outputs 550

Group -- Electric Load Center-Generator Specifications 550

Electric Load Center:Distribution 550

Electric Load Center:Generators 551

Generator: Diesel 552

Generator:Diesel Outputs 556

Generator:Gas Turbine 557

Generator:Gas Turbine Outputs 562

Group – Photovoltaics 563

Photovoltaics 563

PhotoVoltaics Outputs 570

Group – Performance Curves 571

Curve:Quadratic 571

Curve:Cubic 572

Curve:Biquadratic 573

Group – Fluid Properties 574

FluidNames 575

FluidPropertyTemperatures 576

FluidPropertySaturated 577

FluidPropertySuperheated 578

Glycol Fluid Type 580

FluidPropertyConcentration 580

Input for Output 582

Group – Report 582

TABLE OF CONTENTS

Report 582

Type_of_Report = Surfaces 582

Figure 72. Example building from DXF report. 583

Type_of_Report = Variable Dictionary 584

Type_of_Report = Constructions 586

Report Variable 587

Report Meter 588

Table 14. Table of Metered Fuel Types..... 589

Table 15. End Use Category Types 589

Table 16. Overall Meter Types 589

Report PollutionCalculation..... 590

Figure 73. Pollution Report after Processing..... 595

Output 596

Figure 74. Example Chart from Standard Output File 597

Using “ReadVarsESO” (Creating Charts, etc. from Output Files)..... 597

Table 17. "RVI" file contents..... 598

Weather Data.....600

Table 18. Weather File Date Field Interpretation..... 600

Missing Weather File Data 604

Table 19. Missing weather replacement values 604

Weather Data Records..... 604

Weather Data Hourly Interpolation..... 606

Table 20. Illustration of Data Interpolation for 15 minute timesteps 607

Table 21. Illustration of Data Interpolation for 10 minute timesteps 607

Weather File Data Reporting (errors) during Simulation 607

Running EnergyPlus.....608

TABLE OF CONTENTS

Energy+.ini 608

Table 22. EnergyPlus Output Files 609

Errors 610

Table 23. EnergyPlus Errors 610

Timing Studies 610

Table 24. Timing Comparisons (EnergyPlus vs. BLAST) 611

Appendix A. Units and Abbreviations 612

Standard EnergyPlus Units 612

Table 25. Standard EnergyPlus Units 612

Appendix B. Simple IDF file 614

Appendix C. Input Macros 618

Introduction 618

Incorporating External Files 618

Selectively Accepting or Skipping Lines of Input 619

Defining Blocks of Input 621

Arithmetic Operations 622

Macro Debugging and Listing Control 624

Listing Format 626

Appendix D. Acknowledgments 627

Copyright Notice 627

Other Acknowledgments 628

Input-Output Reference

This document is intended to be an encyclopedic reference for the EnergyPlus Input Data Dictionary (IDD), Input Data File (IDF) and potential resultant outputs (various output files).

The following descriptions are "grouped" by the elements in the IDD (ref: Getting Started Document and the IDD Conventions). In some cases, the descriptions of reporting will be done for an object (e.g. Lighting electrical consumption or thermal comfort value for a group of people) and in some cases for the entire group (e.g., ambient condition reports).

What's different about EnergyPlus Input and Output?

The usual procedure for non-interactive programs is to process all the input necessary to "do the job", perform the actions required by the input, and somewhere along the way produce reports on the actions. Usually, there will be error messages on incorrect input statements and/or incorrect conditions detected during processing. Usually, the input is echoed in its entirety so that the context of errors is shown clearly.

EnergyPlus does all the above. However, some nuances are different from the usual actions.

1) EnergyPlus reads the data dictionary (Energy+.idd) and the input data file (in.idf) prior to doing anything else. Only after this is done does processing start. HOWEVER, the input processor only knows as much as the data dictionary has told it. It knows which fields should be alpha and which should be numeric. All of this information (including the IDD) is echoed to the audit file (audit.out) in case errors occur. Most of the errors show up (out of context) in the standard error file (eplusout.err) – there might be enough information to decipher where the error is or you may have to look at the more inclusive audit file. Invalid numeric fields are detected during this processing and default numeric fields are filled. For more information on the IDD, its structure and implications, please see the IDD Conventions discussion below.
2) The biggest difference between EnergyPlus and more traditional input processing is that EnergyPlus is modular in its actual filling in the details for the simulation. Because of the modular structure of EnergyPlus, each module is responsible for "getting" its own input. It receives this input from the input processor in the form of alpha and numeric fields. Each module typically gets all its input the first time it is called. The implication for the user is that error messages may show up in somewhat peculiar places. A further implication is that no order is needed in the input data file! Data that is not needed by a particular simulation is not processed.
3) The data dictionary has the capability to do "automatic" range checking on numeric fields as well as fill in numeric defaults. Both filling in defaults and "automatic" range checking are done when the data is read. Other checks may need a combination of fields and won't be done until the data is "processed" (after the simulation starts).
4) A couple of other differences that might not be true in other programs: Blanks are significant in alpha fields SO DesignDay is not the same as Design Day (1 space between Design and Day) nor Design Day (2 spaces between Design and Day). Alpha objects, however, *are* case insensitive SO DesignDay is the same as 'designday' or 'DESIGNDAY'.

IDD Conventions

The following is a basic description of the structure of the IDD (it's actually taken directly from the IDD file). As noted within, **!** signifies a comment character as does the ****. **** has also been adopted as a convention for including more specific comments about each field in an object.

These have been used with success in the IDFEditor and it is hoped the flexibility will provide other interface developers with useful information.

```
! ***************************************************************************
!
! Object Description
! ------------------
! To define an object (a record with data), develop a key word that is unique
! Each data item to the object can be A (Alphanumeric string) or N (numeric)
! Number each A and N.  This will show how the data items will be put into the
!  arrays that are passed to the Input Processor "Get" (GetObjectItem) routines.
! All alpha fields are limited to 60 characters.  Numeric fields should be valid
! numerics (can include such as 1.0E+05) and are placed into single precision
! variables.
!
! NOTE: Even though a field may be optional, a comma representing that field must
!       be included (unless it is the last field in the object).  Since the
!       entire input is "field-oriented" and not "keyword-oriented", the EnergyPlus
!       Input Processor must have some representation (even if blank) for each
!       field.
!
! Object Documentation
! --------------------
! In addition, the following special comments appear one per line and
! most are followed by a value.  Comments may apply to a field or the object
! or a group of objects.
!
! Field-level comments:
!
!  \field           Name of field
!                     (should be succinct and readable, blanks are encouraged)
!
!  \note            Note describing the field and its valid values
!
!  \required-field  To flag fields which may not be left blank
!                     (this comment has no "value")
!
!  \units           Units (must be from EnergyPlus standard units list)
!                   EnergyPlus units are standard SI units
!
!  \ip-units        IP-Units (for use by input processors with IP units)
!
!  \minimum         Minimum that includes the following value
!
!  \minimum>        Minimum that must be > than the following value
!
!  \maximum         Maximum that includes the following value
!
!  \maximum<        Maximum that must be < than the following value
!
!  \default         Default for the field (if N/A then omit entire line)
!
!  \autosizable     Flag to indicate that this field can be used with the Auto Sizing
!                   routines to produce calculated results for the field.  If a value
!                   follows this, then that will be used when the "Autosize" feature
!                   is flagged.  To trigger autosizing for a field, enter Autosize as
!                   the field's value.  Only applicable to numeric fields.
!
!  \type            Type of data for the field -
!                     integer
!                     real
!                     alpha       (arbitrary string),
!                     choice      (alpha with specific list of choices, see \key)
```

```
!                      object-list (link to a list of objects defined elsewhere,
!                                   see \object-list and \reference)
!
!  \key              Possible value for "\type choice" (blanks are significant)
!                      use multiple \key lines to indicate all valid choices
!
!  \object-list      Name of a list of object names that are valid entries
!                 for this field (used with "\reference")
!                 see ZONE and Surface:HeatTransfer objects below for examples
!                 ** Note that a field may have only one \object-list reference.
!                 ** If it must reference more than one object-list, then a composite
!                 object-list should be created which contains all valid references.
!
!  \reference        Name of a list of object names to which this object belongs
!                 used with "\type object-list" and with "\object-list"
!                 see ZONE and Surface:HeatTransfer objects below for examples:
!
!                         ZONE,
!                           A1 , \field Zone Name
!                                \type alpha
!                                \reference ZoneNames
!                         Surface:HeatTransfer,
!                           A4 , \field InsideFaceEnvironment
!                                \note Zone the surface is a part of
!                                \type object-list
!                                \object-list ZoneNames
!
!        For each zone, the field "Zone Name" may be referenced
!        by other objects, such as Surface:HeatTransfer, so it is commented
!        with "\reference ZoneNames"
!        Fields that reference a zone name, such as a Surface:HeatTransfer's
!        "InsideFaceEnvironment", are commented as
!        "\type object-list" and "\object-list ZoneNames"
!        ** Note that a field may have multiple \reference commands.
!        ** This is useful if the object belongs to a small specific object-list
!        as well as a larger more general object-list.
!
! Object-level comments:
!
!  \memo             Memo describing the object
!
!  \unique-object    To flag objects which should appear only once in an idf
!                      (this comment has no "value")
!
!  \required-object To flag objects which are required in every idf
!                      (this comment has no "value")
!
!  \min-fields       Minimum number of fields that should be included in the
!                    object.  If appropriate, the Input Processor will fill
!                    any missing fields with defaults (for numeric fields).
!                    It will also supply that number of fields to the "get"
!                    routines using blanks for alpha fields (note -- blanks
!                    may not be allowable for some alpha fields).
!
!  \obsolete         This object has been replaced though is kept (and is read)
!                    in the current version.  Please refer to documentation as
!                    to the dispersal of the object.  If this object is encountered
!                    in an IDF, the EnergyPlus InputProcessor will post an
!                    appropriate message to the error file.
!
!  \extensible       This object is dynamically extensible -- meaning, if you
!            change the IDD appropriately (if the object has a simple list
!            structure -- just add items to the list arguments (i.e. BRANCH LIST).
```

```
!           These will be automatically redimensioned and used during the simulation.
!
! Group-level comments:
!
!  \group          Name for a group of related objects
!
```

In the descriptions below, you will see IDD snippets for each input object. The LOCATION object will serve as an example.

```
Location,
  A1 , \field LocationName
       \type  alpha
  N1 , \field Latitude
       \units deg
       \type real
  N2 , \field Longitude
       \units deg
       \type real
  N3 , \field TimeZone
       \units hr (decimal)
       \type real
  N4 ; \field Elevation
       \units m
       \type real
```

For the purposes of this example, the IDD snippet above is somewhat abbreviated from the true definition that you will find in the IDD file and below in the more complete description of the Location object.

First, the object name is given. (Location) This is followed by a comma in both the definition (IDD) and in an input file (IDF). In fact, all fields except the terminating field of an IDD class object and IDF object are followed by commas. The final field in an IDD class object or in an IDF object is terminated by a semi-colon.

Next is an alpha field, the location name. As noted above, for input, spaces are significant in this field. The main inputs for Location are numeric fields. These are numbered (as is the alpha field) for convenience. The \ designations will show various information about the objects as described above in the IDD conventions discussion. Of importance for reading this document are the units and possible minimum and maximum values for a field.

There is automatic processing of the \minimum, \maximum and \default data for numeric fields. Any infractions of the \minimum, \maximum fields are automatically detected and messages will appear in the standard error file. After all the input is checked, infractions will cause program termination (before the bulk of the simulation is completed). Defaults are also enforced if you leave the numeric field blank.

Some objects need all the parameters listed by the definition; some do not. In the descriptions that follow, we will try to indicate which parts are optional. Usually, these will be the last fields in the object input or definition. Even if items are not used for a particular object (e.g. Multiplier in the Surface:HeatTransfer:Sub and type=Door), the field must be included unless it is the *last field in the object*. So, for this instance, one must include a multiplier field (must be numeric and would need to obey any \minimum, \maximum rules) for doors.

Group – Simulation Parameters

This group of objects (Version, Building, Timestep in Hour, Sky Radiance Distribution, Inside Convection Algorithm, Outside Convection Algorithm, Shadowing Calculations, Zone Volume Capacitance Multiplier, Run Control) influences the simulation in various ways.

Version

Field: Version ID

The Version object allows you to enter the proper version that your IDF was created for. This is checked against the current version of EnergyPlus and a Severe error issued (non-terminating) if it does not match the current version string.

TimeStep In Hour

Field: TimeStep in Hour

This parameter specifies how many time steps in each hour will be used for the main "time step" simulation. Note that the system/HVAC/plant simulation has an internally controlled "variable" time step, which will reduce as necessary (to converge) from this basic time step. The time step entered here is usually known as the Zone Time Step.

```
TIMESTEP IN HOUR,
       \unique-object
  N1 ; \field Time Step in Hour
       \required-field
       \note Number in hour: validity 1 to 6: 4 suggested
       \note Should be evenly divisible into 60
       \note Specifying 6 as maximum as higher values may cause instability.
       \default 4
       \type integer
       \minimum 1
       \maximum 6
```

And, the IDF example:

```
TIMESTEP IN HOUR, 6;  !Suggested default for most system simulations
```

Suggested defaults are 4 for non-HVAC simulations, 6 for simulations with HVAC.

> Note that hourly data (such as outdoor conditions expressed by Design Days or Weather data) are interpolated to the Zone Time Step. This is discussed In a later section: Weather Data Hourly Interpolation

Building

These are parameters that control certain elements of the simulation.

```
BUILDING,
       \unique-object
       \required-object
       \min-fields 6
  A1 , \field Building Name
       \required-field
       \default NONE
  N1 , \field North Axis
       \note degrees from true North
       \units deg
       \type real
       \default 0.0
  A2 , \field Terrain
       \note  Country=FlatOpenCountry | Suburbs=RoughWoodedCountryTownsSuburbs | City=CityCenter
       \type choice
       \key Country
       \key Suburbs
       \key City
       \default Suburbs
  N3 , \field Loads Convergence Tolerance Value
       \units W
       \type real
       \minimum> 0.0
       \default .04
```

```
  N4 , \field Temperature Convergence Tolerance Value
       \units C
       \type real
       \minimum> 0.0
       \default .4
  A3 ; \field Solar Distribution
       \note  MinimalShadowing | FullExterior | FullInteriorAndExterior
       \type choice
       \key MinimalShadowing
       \key FullExterior
       \key FullInteriorAndExterior
       \default MinimalShadowing
```

And example from an IDF:

```
BUILDING,PSI HOUSE DORM AND OFFICES,  ! Building Name
   36.87000    ,   ! Building Azimuth
  Suburbs,   ! Building Terrain
  3.9999999E-02,   ! Loads Convergence Tolerance
  0.4000000    ,   ! Temperature Convergence Tolerance
    FullInteriorAndExterior;   ! Solar Distribution
```

The Building class describes parameters that are used during the simulation of the building.

Field: Building Name

Building name is specified merely for output convenience.

Field: North Axis

The Building North Axis is **specified relative to true North**. Buildings frequently do not line up with true north. For convenience, one may enter surfaces in a “regular” coordinate system and then shift them via the use of the North Axis. The value is specified in degrees from “true north” (clockwise is positive).

The figure below shows how the building north axis can be rotated to correspond with one of the major axes of an actual building. The relevance of this field is described more completely under “SurfaceGeometry”; in particular, the value of “North Axis” is *ignored* if a coordinate system other than “relative” is used.

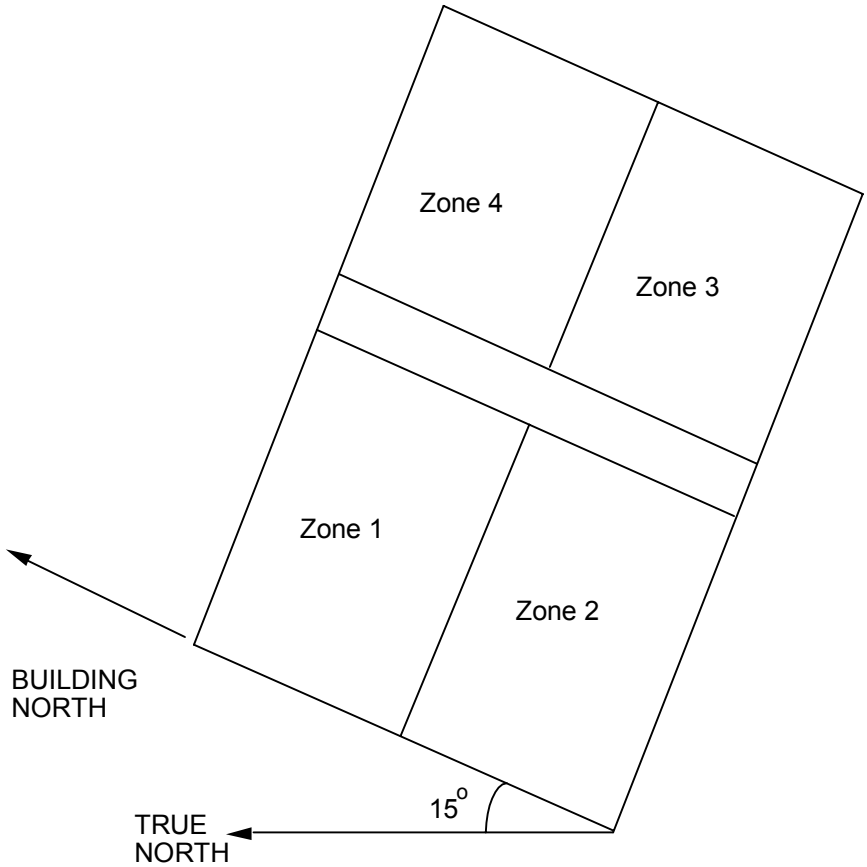

Figure 1. Illustration of Building North Axis

Field: Terrain

The wind velocity as a function of height above ground is assumed to follow the power law:

$$\frac{V_z}{V_g} = \left(\frac{Z}{A_g}\right)^{1/\alpha}$$

where

V_z = wind speed at height z above ground
V_g = wind speed above the boundary layer
Z_g = height of boundary layer
$1/\alpha$ = exponent (see description below)

Z_g and α are dependent upon terrain type.

Terrain Type Value	Terrain Description	Zg	
Country	Flat, Open Country	275 m	7.0
Suburbs	Rough, Wooded Country, Suburbs	400 m	3.5
City	Towns, city outskirts, center of large cities	520 m	2.5

Typically, wind speed measurements are taken at 10 m above ground and V_z can be computed from the reported wind speed (V) by the following formula:

$$V_Z = V * \left(\frac{Z}{9.14} \right)^{1/\alpha}$$

**Reference: A.G. Davenport, Wind Loads on Structures, Technical Paper No. 88, Division of Building Research, Building Research Council, Ottawa, CA, 1960.

Field: Loads convergence

This value represents the number at which the loads values must agree before “convergence” is reached.

Field: Temperature Convergence

This value represents the number at which the zone temperatures must agree (from previous iteration) before “convergence” is reached.

Convergence of the simultaneous heat balance/HVAC solution is reached when either the loads or temperature criterion is satisfied.

Field: Solar Distribution

Setting this value determines how EnergyPlus will treat beam solar radiation entering a zone through exterior windows. There are three choices: **MinimalShadowing**, **FullExterior** and **FullInteriorAndExterior**.

MinimalShadowing

In this case, there is no exterior shadowing except from window and door reveals. All beam solar radiation entering the zone is assumed to fall on the floor, where it is absorbed according to the floor's solar absorptance. Any reflected by the floor is added to the transmitted diffuse radiation, which is assumed to be uniformly distributed on all interior surfaces. If no floor is present in the zone, the incident beam solar radiation is absorbed on all interior surfaces according to their absorptances. The zone heat balance is then applied at each surface and on the zone's air with the absorbed radiation being treated as a flux on the surface.

FullExterior

In this case, shadow patterns on exterior surfaces caused by detached shading, wings, overhangs, and exterior surfaces of all zones are computed. As for MinimalShadowing, shadowing by window and door reveals is also calculated. Beam solar radiation entering the zone is treated as for MinimalShadowing.

FullInteriorAndExterior

This is the same as FullExterior except that instead of assuming all transmitted beam solar falls on the floor the program calculates the amount of beam radiation falling on each surface in the zone, including floor, walls and windows, by projecting the sun's rays through the

exterior windows, taking into account the effect of exterior shadowing surfaces and window shading devices.

If this option is used, you should be sure that the surfaces of the zone totally enclose a space. This can be determined by viewing the **eplusout.dxf** file with a program like AutoDesk's Volo View Express. You should also be sure that the zone is **convex**. Examples of convex and non-convex zones are shown in the figure below. The most common non-convex zone is an L-shaped zone. (A formal definition of convex is that any straight line passing through the zone intercepts at most two surfaces.) If the zone's surfaces do not enclose a space or if the zone is not convex you should use Solar Distribution = **FullExterior** instead of **FullInteriorAndExterior**.

If you use **FullInteriorAndExterior** the program will calculate how much beam radiation falling on an interior window is absorbed by the window, how much is reflected back into the zone, and how much is transmitted into the adjacent zone. (Interior windows are assumed to have no shading device). Note, however, that daylighting through interior windows is not calculated.

If you use **FullInteriorAndExterior** the program will also calculate how much beam radiation falling on the inside of an exterior window (from other windows in the zone) is absorbed by the window, how much is reflected back into the zone, and how much is transmitted to the outside. In this calculation the effect of an interior or exterior shading device, if present, is accounted for.

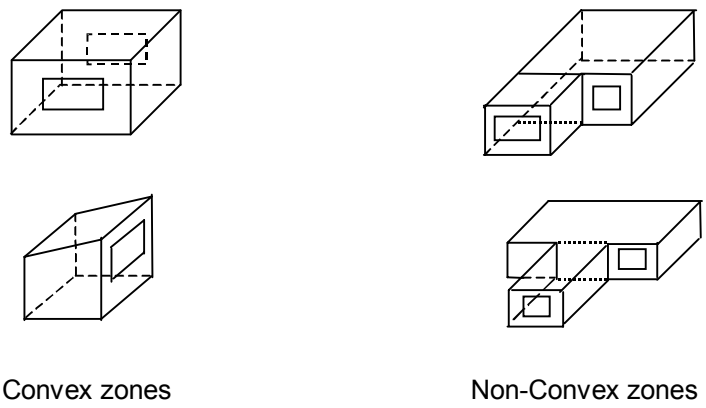

Figure 2. Illustration of Convex and Non-convex Zones

Airflow Model

EnergyPlus allows users to model airflow into and through a building using either a simplified infiltration model and user-specified interzone airflows, or the COMIS multi-zone airflow model. COMIS, which stands for "Conjunction of Multi-zone Infiltration Specialists", is a network-based multi-zone airflow model developed by a multinational team in the framework of International Energy Agency's Annex 23 for simulating airflows through the building fabric due to infiltration or natural ventilation, and from zone to zone, as well as the interactions of the HVAC system, ducts, and exhaust hoods and fans. Currently, only the air flows through the building fabric and from zone to zone has been implemented, and not the air flow through the ducts and mechanical systems.

Field: AirFlowModelValue

This alpha field designates which kind of airflow model will be used during the simulation. The choices are "Simple" or "COMIS". For the Simplified Air Flow Model, the allowable inputs

are then **Infiltration**, **Mixing**, and **Cross Mixing**. These are described later under “Group AirFlow”. For the COMIS Multi-zone Air Flow Model, the allowable inputs are described in the second part of the AirFlow Group. All of the COMIS-related inputs begin with the word "COMIS".

```
Airflow Model,
      \unique-object
      \memo See Group Air Flow for inputs.
 A1 ; \field AirFlowModelValue
      \type choice
      \key Simple
      \key COMIS
```

An IDF example :

```
AIRFLOW MODEL, COMIS ;    ! Use COMIS Air Flow Model
```

Inside Convection Algorithm

Four interior convection models may be selected in EnergyPlus. The simple natural convection model applies constant heat transfer coefficients depending on the surface orientation. The detailed natural convection model correlates the heat transfer coefficient to the temperature difference for various orientations. This model is based on flat plate experiments. The third model is a mixed and forced convection model for ceiling diffuser configurations. The model correlates the heat transfer coefficient to the air change rate for ceilings, walls and floors. These correlations are based on experiments performed in an isothermal room with a cold ceiling jet. The fourth model is a natural convection model correlated for Trombe wall passive solar applications.

To avoid discontinuities in surface heat transfer rate calculations, all of correlations have been extrapolated beyond the lower limit of the data set (3 ACH) to a natural convection limit which is applied during the hours when the system is off. These models are explained in greater detail in the EnergyPlus Engineering Reference Document.

Field: Inside Convection Value

The model specified in this field is the default algorithm for all zones. The optional Zone Inside Convection Algorithm field in the Zone object may be used to selectively override this value on a zone-by-zone basis.

```
INSIDE CONVECTION ALGORITHM,
       \memo Default Inside Convection Algorithm to be used for all zones
       \unique-object
  A1 ; \field InsideConvectionValue
       \required-field
       \type choice
       \key Simple
       \key Detailed
       \key CeilingDiffuser
       \key TrombeWall
       \note Simple = constant natural convection (ASHRAE)
       \note Detailed = variable natural convection based on temperature difference (ASHRAE)
       \note CeilingDiffuser = ACH based forced and mixed convection correlations
       \note  for ceiling diffuser configuration with simple natural convection limit
       \note TrombeWall = variable natural convection in an enclosed rectangular cavity
```

IDF Example:

```
INSIDE CONVECTION ALGORITHM,Detailed;
```

Outside Convection Algorithm

Field: Outside Convection Value

Two exterior convection models may be selected in EnergyPlus. The simple convection model applies constant heat transfer coefficients depending on the roughness and windspeed. The correlation is based on Figure 1, Page 22.4, 1989 ASHRAE Handbook of Fundamentals. The detailed convection model applies heat transfer coefficients depending on the roughness, windspeed, and terrain of the building's location. This is described more fully in the Engineering Reference.

Note that in either case (Simple or Detailed), when the surface is wet – it is raining – then the convection coefficient appears as a very large number (1000.) – and the surface is exposed to the Outdoor Wet Bulb Temperature rather than the Outdoor Dry Bulb Temperature.

```
OUTSIDE CONVECTION ALGORITHM,
       \unique-object
  A1 ; \field OutsideConvectionValue
       \required-field
       \type choice
       \key Simple
       \key Detailed
       \note Simple = ASHRAE Simple
       \note Detailed = ASHRAE Detailed
```

IDF Example:

```
OUTSIDE CONVECTION ALGORITHM,Detailed;
```

Solution Algorithm Selection

The solution algorithm selection provides a way to select what type of heat in moisture transfer algorithm will be used across the building constructions.

Field: SolutionAlgo

Three values are allowed to select which solution will be used. The **CTF** selection is a sensible heat only solution and does not take into account moisture storage or diffusion in the construction elements. The **MTF** selection is a simultaneous heat and mass transfer solution with vapor adsorption taking place in the building construction. This solution technique uses the Evaporation-Condensation theory and needs additional moisture material property information. The **EMPD** selection is a sensible heat diffusion and an inside surface moisture storage algorithm that also needs additional moisture material property information. See the appropriate moisture material property objects for additional information.

With the current implementation, it is difficult to use the MTF simulation approach for annual simulations without careful consideration of the moisture capacitance coefficients due to the moisture non-linearities. Please reference the MTF Moisture Material non-linearities in the Engineering manual for the limitations.

```
SOLUTION ALGORITHM,
       \memo Determines which Heat Balance Algorithm will be used ie. CTF, MTF, or EMPD
       \unique-object
  A1 ; \field SolutionAlgo
       \required-field
       \type choice
       \key CTF
       \key MTF
       \key EMPD
       \default CTF
```

And, a default IDF example

```
SOLUTION ALGORITHM,CTF;   ! Solution Algorithm
```

Sky Radiance Distribution

```
SKY RADIANCE DISTRIBUTION,
       \unique-object
  N1 ; \field SkyRadianceValue
       \required-field
       \note  0=isotropic | 1=anisotropic
       \type integer
       \default 1
       \minimum 0
       \maximum 1
```

For the purposes of development and possibly through V1.0 release, this option will allow selection of the old algorithm (isotropic sky) or the new replacement Perez model (anisotropic sky) for shadowing of sky diffuse solar radiation. For each exterior surface, a factor is calculated that multiplies the internally-calculated sky view factor for the surface to account for the anisotropy of the sky solar radiance distribution. The anisotropy of the sky solar radiance affects sky diffuse solar incident on sloped surfaces, like walls.

The sky diffuse solar shadowing works by dividing the sky dome into patches and using the direct-solar shadowing calculations to get the shading from each patch. Adding the effects from all the patches gives sky diffuse shadowing factors.

Note that the default for Sky Radiance Distribution is Anisotropic..

An IDF example:

```
SKY RADIANCE DISTRIBUTION,0; ! Sky Radiance (isotropic)
```

Shadowing Calculations

In order to speed up the calculations, shadowing calculations (sun position, etc) are performed over a period of days. Note that this value may be very important for determining the amount of sun entering your building and by inference the amount of cooling or heating load needed for maintaining the building. Though termed “shadowing” calculations, it in affect determines the sun position for a particular day in a weather file period simulation. (Each design day will use the date of the design day object). Even though weather file data contains the amount of solar radiation, the internal calculation of sun position will govern how that affect various parts of the building. By default, this is every 20 days throughout a weather run period.

Field: Period_for_Calculations

This numeric field will cause the shadowing calculations to be done periodically using the number in the field as the number of days in each period. Using this field will allow you to synchronize the shadowing calculations with changes in shading devices. Using the default of 20 days in each period is the average number of days between significant changes in solar position angles.

```
SHADOWING CALCULATIONS,
       \unique-object
  N1 ; \field Period_for_calculations
       \required-field
       \minimum 1
       \default 20
       \note 0=Use Default Periodic Calculation|<else> calculate every <value> day
       \note only really applicable to RunPeriods
```

If shadowing surfaces are used with the transmittance property, the user should be careful to synchronize this calculation with the scheduled occurance of the transmittance (if any) (or use 1, which will be the most accurate but will cause more time in the calculations). Example:

```
SHADOWING CALCULATIONS,1;
```

Zone Volume Capacitance Multiplier

Zone Volume Capacitance Multiplier = 1.0 is the capacitance of the air in the volume of the specified zone. This multiplier can be increased if the zone air capacitance needs to be increased for stability of the simulation.

```
ZONE VOLUME CAPACITANCE MULTIPLIER,
       \unique-object
  N1 ; \field Capacitance Multiplier
       \type real
       \default 1.0
       \note Used for Stability in Predictor Corrector Step by Increasing Reactive Capacity
```

One of the few EnergyPlus defaulted items. If not defined, it defaults to 1.0.

Run Control

The input for Run Control allows the user to specify what kind of calculations a given EnergyPlus simulation will perform. For instance the user may want to perform one or more of the sizing calculations but not proceed to a annual weather file simulation. Or the user might have all flow rates and equipment sizes already specified and desire an annual weather without any preceding sizing calculations. The Run Control input allows all permutations of run selection by means of 5 yes/no inputs.

> Only one Run Control object is permitted for each EnergyPlus input file. While a Run Control is needed to trigger sizing calculations, it is optional for other runs (design days, run periods). The actions will still be shown in the eplusout.eio file (see below).

Field: Do the zone sizing calculation

Input is Yes or No. The default is No.

Field: Do the system sizing calculation

Input is Yes or No. The default is No.

Field: Do the plant sizing calculation

Input is Yes or No. The default is No.

Field: Do the design day simulations

Input is Yes or No. The default is Yes.

Field: Do the weather file simulation

Input is Yes or No. The default is Yes.

The full IDD specification follows:

```
RUN CONTROL,
       \unique-object
  A1, \field Do the zone sizing calculation
      \type choice
      \key Yes
      \key No
      \default No
  A2, \field Do the system sizing calculation
      \type choice
      \key Yes
      \key No
      \default No
  A3, \field Do the plant sizing calculation
      \type choice
      \key Yes
      \key No
      \default No
  A4, \field Do the design day simulations
      \type choice
      \key Yes
      \key No
      \default Yes
  A5; \field Do the weather file simulation
      \type choice
      \key Yes
      \key No
      \default Yes
```

An IDF example:

```
RUN CONTROL,
   Yes, !zone sizing
   No,  ! system sizing
   No,  ! plant sizing
   No,  ! design day full simulation
   No;  ! weather file full simulation
```

Simulation Parameter Outputs

These appear in the eplusout.eio file:

```
! <Version>, Version ID
 Version, 1.0.1
! <Time Steps per Hour>, #TimeSteps, Minutes per TimeStep
 TimeSteps Per Hour,  4, 15
! <Run Control>, Do Zone Sizing, Do System Sizing, Do Plant Sizing, Do Design Days, Do Weather Simulation
 Run Control, No, No, No, Yes, Yes
! <Building Information>, Building Name,North Axis {deg},Terrain,  Loads Convergence Tolerance Value,
Temperature Convergence Tolerance Value,  Solar Distribution
 Building, PSI HOUSE DORM AND OFFICES,  36.870,Suburbs,   0.04000,   0.40000,FullInteriorAndExterior
! Inside Convection Algorithm, Value {Simple | Detailed | CeilingDiffuser | TrombeWall}
Inside Convection Algorithm,Detailed
! Outside Convection Algorithm, Value {Simple | Detailed}
Outside Convection Algorithm,Detailed
! Solution Algorithm, Value {CTF | EMPD | MTF}
Solution Algorithm, CTF
! Sky Radiance Distribution, Value {0=Isotropic | 1=Anisotropic}
Sky Radiance Distribution, 1
! Shadowing/Sun Position Calculations [Annual Simulations], Value {days}
Shadowing/Sun Position Calculations, 20
! <AirFlow Model>, Simple/Comis
 AirFlow Model, COMIS
! Zone Volume Capacitance Multiplier, Value
Zone Volume Capacitance Multiplier,   1.000
```

Group – Location – Climate – Weather File Access

This group of objects (Location, RunPeriod, DesignDay, GroundTemperatures, SpecialDayPeriod, DaylightSavingPeriod) describes the ambient conditions for the simulation.

Location

The location class describes the parameters for the building's location. Only one location is allowed. Weather data file location, if it exists, will override any location data in the IDF. Thus, for an annual simulation, a Location does not need to be entered.

Field: LocationName

This alpha field is used as an identifying field in output reports.

Field: Latitude

This field represents the latitude (in degrees) of the facility. By convention, North Latitude is represented as positive; South Latitude as negative. Minutes should be represented in decimal fractions of 60. (15' is 15/60 or .25)

Field: Longitude

This field represents the longitude (in degrees) of the facility. By convention, East Longitude is represented as positive; West Longitude as negative. Minutes should be represented in decimal fractions of 60. (15' is 15/60 or .25)

Field: TimeZone

This field represents the time zone of the facility (relative to Greenwich Mean Time or the 0th meridian). Time zones west of GMT (e.g. North America) are represented as negative; east of GMT as positive. Non-whole hours can be represented in decimal (e.g. 6:30 is 6.5).

Field: Elevation

This field represents the elevation of the facility in meters (relative to sea level).

```
Location,
       \unique-object
       \min-fields 5
  A1 , \field LocationName
       \required-field
       \type  alpha
  N1 , \field Latitude
       \units deg
       \minimum -90.0
       \maximum +90.0
       \default 0.0
       \note + is North, - is South, degree minutes represented in decimal (i.e. 30 minutes is .5)
       \type real
  N2 , \field Longitude
       \units deg
       \minimum -180.0
       \maximum +180.0
       \default 0.0
       \note - is West, + is East, degree minutes represented in decimal (i.e. 30 minutes is .5)
       \type real
  N3 , \field TimeZone
       \units hr (decimal)
       \minimum -12.0
       \maximum +12.0
       \default 0.0
       \note  Time relative to GMT.
       \type real
  N4 ; \field Elevation
       \units m
       \minimum -300.0
       \maximum< 6096.0
       \default 0.0
       \type real
```

Units with their abbreviations are shown in Appendix A. And, as shown in an IDF:

```
Location, DENVER COLORADO,     ! Location Name
   39.75000    ,     ! Latitude {N+ S-}
  -104.8700    ,     ! Longitude {W- E+}
  -7.000000    ,     ! TimeZoneNumber {GMT+/-}
  1610.26;           ! Elevation {m}
```

Most all examples in this document will include comment lines that illustrate each data field's value. However, this is not necessary (though it makes the IDF more readable). The previous example could also be:

```
Location, DENVER COLORADO,39.75,-104.87,-7,1610.26;
```

RunPeriod

The RunPeriod class describes the elements necessary to create a weather file simulation. Multiple run periods may be input. EnergyPlus accepts weather files in the special EnergyPlus weather format (described below in this document). These files can describe Daylight Saving Time periods as well as holidays within their definitions. The RunPeriod class will allow the user to override the use of both the Daylight Saving Period (i.e. use or ignore) and holidays that are embedded within the weather file. Note that the weather file also may contain design condition information, typical and extreme period information, ground temperatures based on air temperature calculations.

Field: Begin Month

This numeric field should contain the starting month number (1=January, 2=February, etc.) for the annual run period desired.

Field: Begin Day Of Month

This numeric field should contain the starting day of the starting month (must be valid for month) for the annual run period desired.

Field: End Month

This numeric field should contain the ending month number (1=January, 2=February, etc.) for the annual run period desired.

Field: End Day Of Month

This numeric field should contain the ending day of the ending month (must be valid for month) for the annual run period desired.

Field: Day Of Week For Start Day

For flexibility, the day of week indicated on the weather file can be overridden by this field's value. Valid days of the week (Sunday, Monday, Tuesday, Wednesday, Thursday, Friday, Saturday) must be entered in this field.

Field: Use WeatherFile Holidays/Special Days

Weather files can contain holiday designations or other kinds of special days. These day types cause a corresponding day's schedule (see SCHEDULE definitions below) to be used during that day. This field should contain the word **Yes** if holidays or other special days indicated directly on the weather file should retain their "day type" or **No** if holidays or other special days on the weather file should be ignored. Reference SpecialDayPeriod below to enter your own special days and holidays.

Note that a blank or null field in this field will indicate **Yes**.

Field: Use WeatherFile DaylightSavingPeriod

Weather files can contain indicators of Daylight Saving period days. For flexibility, you may want to ignore these designations on the weather file. This field should contain the word **Yes** if you will accept daylight saving period days as contained on the weather file (note: not all weather files may actually have this period) or **No** if you wish to ignore Daylight Saving period days that may be on the weather file.

Note that a blank or null field in this field will indicate **Yes**.

Field: Apply Weekend Holiday Rule

In some countries (notably the US), when holidays fall on weekends, they are often observed on a weekday close to the holiday day. (Usually if the specific day falls on a Saturday, the observed day is Friday; if on a Sunday, the observed day is Monday). EnergyPlus will represent this custom using the value in this field. If the field is **Yes**, then specific date holidays that have a duration of one day, will be "observed" on the Monday after the day. (Specific day holidays are such as January 1 – a day-month combination). If the field is blank or **No**, then the holiday will be shown on the day-month as entered. As this option is listed at the RunPeriod, all applicable special days for the run will use the rule – there is no override for individual special days.

Note that a blank or null field in this field will indicate **No**.

Note: EnergyPlus processed weather files available on the EnergyPlus web site: http://www.energyplus.gov/weatherdata.html have neither special days specified nor daylight saving period.

```
RunPeriod,
   \min-fields 8
  N1 , \field Begin Month
       \required-field
       \minimum 1
       \maximum 12
       \type integer
  N2 , \field Begin Day Of Month
       \required-field
       \minimum 1
       \maximum 31
       \type integer
  N3 , \field End Month
       \required-field
       \minimum 1
       \maximum 12
       \type integer
  N4 , \field End Day Of Month
       \required-field
       \minimum 1
       \maximum 31
       \type integer
  A1 , \field Day Of Week For Start Day
       \note  =<blank - use WeatherFile>|Sunday|Monday|Tuesday|Wednesday|Thursday|Friday|Saturday];
       \default UseWeatherFile
       \type choice
       \key Sunday
       \key Monday
       \key Tuesday
       \key Wednesday
       \key Thursday
       \key Friday
       \key Saturday
       \key UseWeatherFile
  A2,  \field Use WeatherFile Holidays/Special Days
       \note If yes or blank, use holidays as specified on Weatherfile.
       \note If no, do not use the holidays specified on the Weatherfile.
       \note Note: You can still specify holidays/special days using the SpecialDayPeriod object(s).
       \type choice
       \default Yes
       \key Yes
       \key No
  A3,  \field Use WeatherFile DaylightSavingPeriod
       \note If yes or blank, use daylight saving period as specified on Weatherfile.
       \note If no, do not use the daylight saving period as specified on the Weatherfile.
       \type choice
       \default Yes
       \key Yes
       \key No
  A4;  \field Apply Weekend Holiday Rule
       \note if yes and single day holiday falls on weekend, "holiday" occurs on following Monday
       \type choice
       \key Yes
       \key No
       \default No
```

And, as shown in an IDF:

```
RunPeriod,     ! Annual simulation
           5,          1,  ! Start Month , Day
           5,         10,   ! End Month, Day
            ,    ! Will use day as shown on Weatherfile
            ,    ! Will use Holidays as embedded within the weather file
            ,    ! Will use Daylight Saving Time as embedded within the weather file
            ;    ! Will not reassign weekend holidays to Monday
```

DesignDay

The design day input describes the parameters to effect a “design day” simulation, often used for load calculations or sizing equipment. Using the values in these fields, EnergyPlus

"creates" a complete day's worth of weather data (air temperatures, solar radiation, etc.) Multiple design days may be input.

Field: DesignDayName

This field, like Location, is used simply for reporting and identification. This name must be unique among the Design Days entered.

Field: Maximum Dry-Bulb Temperature

This numeric field should contain the day's maximum dry bulb temperature in degrees Celsius. (Reference Appendix A of this document for EnergyPlus standard units and abbreviations).

Field: Daily Temperature Range

A design day can have a "high" temperature and a "low" temperature (or can be a constant temperature for each hour of the day). If there is a difference between high and low temperatures, this field should contain the difference from the high to the low. EnergyPlus distributes this range over the 24 hours in the day as shown in the figure below:

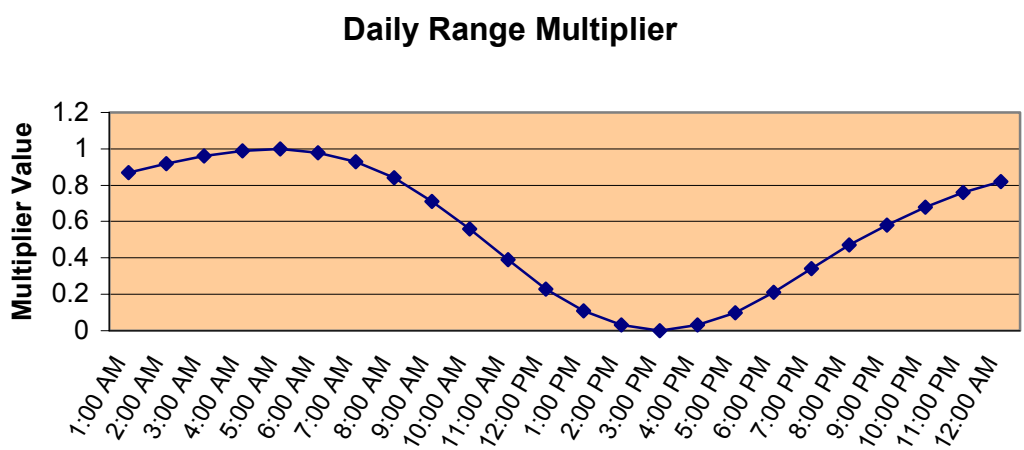

Figure 3. Daily range Multiplier for Design Days

More explicitly, EnergyPlus creates an air temperature for each timestep by using the entered maximum dry bulb temperature in conjunction with the entered daily range and the above multiplier values. The actual equation used is shown below:

$$T_{current} = T_{Max} - T_{range} \bullet T_{Multiplier}$$

where

$T_{current}$= Air temperature of current Hour of Day

T_{Max}= User supplied Max Dry Bulb Temperature

T_{range}= User supplied Daily Temperature Range

$T_{Multiplier}$= Range multiplier as shown on the above graph

The range multiplier values represent typical conditions of diurnal temperatures (i.e. the low temperature for the day occurring about 5:00 AM and the maximum temperature for the day occurring about 3:00 PM.

Field: Wet-Bulb Temperature At MaxTemp

This numeric field represents the wet bulb temperature (degrees Celsius) at the maximum temperature for the day. Using this value, along with the Maximum Dry Bulb Temperature and Barometric Pressure, a humidity ratio is calculated and then used to calculate the Wet Bulb Temperatures at each hour.

Field: Barometric Pressure

This numeric field is the constant barometric pressure (Pascals) for the entire day.

Field: Wind Speed

This numeric field is the wind speed in meters/second (constant throughout the day) for the day.

Field: Wind Direction

This numeric field is the source wind direction in degrees. By convention, winds from the North would have a value of 0., from the East a value of 90.

Field: Sky Clearness

This value represents the "clearness" value for the day. This value, along with the solar position as defined by the Location information and the date entered for the design day, help define the solar radiation values for each hour of the day.

Field: Rain Indicator

This numeric field indicates whether or not the building surfaces are wet. If the value is 1, then it is assumed that the building surfaces are wet. Wet surfaces may change the conduction of heat through the surface.

Field: Snow Indicator

This numeric field indicates whether or not there is snow on the ground. If the value is 1, then it is assumed there is snow on the ground. Snow on the ground changes the ground reflectance properties.

Field: Day Of Month

This numeric field specifies the day of the month. That, in conjunction with the month and location information, determines the current solar position and solar radiation values for each hour of the day.

Field: Month

This numeric field specifies the month. That, in conjunction with the day of the month and location information, determines the current solar position and solar radiation values for each hour of the day.

Field: Day Type

This alpha field specifies the day type for the design day. This value indicates which day profile to use in schedules. For further information, see the Schedule discussion later in this document {Group -- Schedules}. Note that two of the possible day types have been designated "SummerDesignDay", "WinterDesignDay" – allowing the user to customize schedules for the design conditions.

Field: Daylight Saving Time Indicator

This numeric field specifies whether to consider this day to be a “Daylight Saving Day”. This essentially adds 1 hour to the scheduling times used in items with schedules.

```
DesignDay,
   \min-fields 14
  A1 , \field DesignDayName
       \type alpha
       \required-field
       \reference DesignDays
  N1 , \field Maximum Dry-Bulb Temperature
       \required-field
       \units C
       \minimum> -70
       \maximum< 70
       \note
       \type real
  N2 , \field Daily Temperature Range
       \required-field
       \units C
       \minimum 0
       \type real
       \note must still produce appropriate maximum dry bulb
  N3 , \field Wet-Bulb Temperature At MaxTemp
       \required-field
       \units C
       \minimum> -70
       \maximum< 70
       \type real
  N4 , \field Barometric Pressure
       \required-field
       \units Pa
       \minimum> 70000
       \maximum< 120000
       \type real
  N5 , \field Wind Speed
       \required-field
       \units m/s
       \minimum 0
       \maximum 40
       \type real
  N6 , \field Wind Direction
       \required-field
       \units deg
       \minimum 0
       \maximum 359.9
       \note North=0.0 East=90.0
       \type real
  N7 , \field Sky Clearness
       \required-field
       \minimum 0.0
       \maximum 1.2
       \default 0.0
       \note 0.0 is totally unclear, 1.0 is totally clear
       \type real
  N8 , \field Rain Indicator
       \minimum 0
       \maximum 1
       \default 0
       \note 1 is raining, 0 is not
       \type integer
```

```
N9 , \field Snow Indicator
     \minimum 0
     \maximum 1
     \default 0
     \note 1 is Snow on Ground, 0 is no Snow on Ground
     \type integer
N10, \field Day Of Month
     \required-field
     \minimum 1
     \maximum 31
     \type integer
     \note must be valid for Month field
N11, \field Month
     \required-field
     \minimum 1
     \maximum 12
     \type integer
A2 , \field Day Type
     \required-field
     \note Day Type selects the schedules appropriate for this design day
     \type choice
     \key Sunday
     \key Monday
     \key Tuesday
     \key Wednesday
     \key Thursday
     \key Friday
     \key Saturday
     \key Holiday
     \key SummerDesignDay
     \key WinterDesignDay
     \key CustomDay1
     \key CustomDay2
N12; \field Daylight Saving Time Indicator
     \minimum 0
     \maximum 1
     \default 0
     \note 1=Yes, 0=No
     \type integer
```

SpecialDayPeriod

For weather file run periods, special day run periods can be described. These will always be in effect for the selected days in the run period. Depending on the Use Special Days value in the RunPeriod object, these can augment any special days included on the weather file.

> Note: EnergyPlus processed weather files available on the EnergyPlus web site: http://www.energyplus.gov/weatherdata.html have neither special days specified nor daylight saving period.

Field: Holiday Name

This alpha field is the title for the special day period. It must be unique among all the special day period objects entered.

Field: StartDate

This field is the starting date for the special day period. Dates in this field can be entered in several ways as shown in the accompanying table:

Table 1. Date Field Interpretation

Field Contents	Interpretation
<number> / <number>	Month / Day
<number> Month	Day and Month
Month <number>	Day and Month
<number> Weekday in Month	Numbered weekday of month
Last Weekday In Month	Last weekday of month

In the table, Month can be one of (January, February, March, April, May, June, July, August, September, October, November, December). Abbreviations of the first three characters are also valid.

In the table, Weekday can be one of (Sunday, Monday, Tuesday, Wednesday, Thursday, Friday, Saturday). Abbreviations of the first three characters are also valid.

Field: duration (number of days)

This numeric field specifies how long the special day period lasts.

Field: SpecialDayType

This alpha field designates the “day type” for schedule use during the special period. It must be one of (Holiday, SummerDesignDay, WinterDesignDay, CustomDay1, CustomDay2).

```
SpecialDayPeriod,
     \min-fields 4
     \memo This object sets up holidays/special days to be used during weather file
     \memo run periods.  (These are not used with DesignDay objects.)
     \memo Depending on the value in the run period, days on the weather file may also
     \memo be used.  However, the weather file specification will take precedence over
     \memo any specification shown here.  (No error message on duplicate days or overlapping
     \memo days).
 A1, \field Holiday Name
     \required-field
 A2, \field StartDate
     \required-field
     \memo  Dates can be several formats:
     \memo  <number>/<number>  (month/day)
     \memo  <number> <Month>
     \memo  <Month> <number>
     \memo <Nth> <Weekday> in <Month)
     \memo Last <WeekDay> in <Month>
     \memo <Month> can be January, February, March, April, May, June, July, August, September, October,
November, December
     \memo Months can be the first 3 letters of the month
     \memo <Weekday> can be Sunday, Monday, Tuesday, Wednesday, Thursday, Friday, Saturday
     \memo <Nth> can be 1 or 1st, 2 or 2nd, etc. up to 5(?)
 N1, \field duration (number of days)
     \minimum 1
     \maximum 366
     \default 1
 A3; \field SpecialDayType
       \required-field
       \note SpecialDayType selects the schedules appropriate for each day so labeled
       \type choice
       \key Holiday
       \key SummerDesignDay
       \key WinterDesignDay
       \key CustomDay1
       \key CustomDay2
       \default Holiday
```

An example in the IDF would be:

```
SpecialDayPeriod, President's Day, 3rd Monday in February,1,Holiday;
SpecialDayPeriod, Thanksgiving, 4th Thursday in November, 1,Holiday;
SpecialDayPeriod, Halloween, 10/31, 1, Holiday;
SpecialDayPeriod, Vacation, 5/1, 14, CustomDay1;
```

DaylightSavingPeriod

Similar to a Special Day Period, a Daylight Saving Period may be entered to be applied to Run Periods. These will always be in effect, regardless of the value entered on the RunPeriod object. Note that this period will always override any daylight saving period specified in a weather file.

> Note: EnergyPlus processed weather files available on the EnergyPlus web site: http://www.energyplus.gov/weatherdata.html have neither special days specified nor daylight saving period.

Field: StartDate

This is the starting date of the daylight saving period. Note that it can be entered in several formats as shown in Table 1. Date Field Interpretation.

Field: EndDate

This is the ending date of the daylight saving period. Note that it can be entered in several formats as shown in Table 1. Date Field Interpretation.

```
DaylightSavingPeriod,
     \unique-object
     \min-fields 2
     \memo This object sets up the daylight saving period for any RunPeriod.
     \memo Ignores any daylightsavingperiod values on the weather file and uses this definition.
     \memo (These are not used with DesignDay objects.)
 A1, \field StartDate
     \required-field
 A2; \field EndDate
     \required-field
     \memo  Dates can be several formats:
     \memo  <number>/<number>  (month/day)
     \memo  <number> <Month>
     \memo  <Month> <number>
     \memo <Nth> <Weekday> in <Month)
     \memo Last <WeekDay> in <Month>
     \memo <Month> can be January, February, March, April, May, June, July, August, September, October,
November, December
     \memo Months can be the first 3 letters of the month
     \memo <Weekday> can be Sunday, Monday, Tuesday, Wednesday, Thursday, Friday, Saturday
     \memo <Nth> can be 1 or 1st, 2 or 2nd, etc. up to 5(?)
```

And in the IDF:

```
! U.S. Standard for Daylight Saving
DaylightSavingPeriod,1st Sunday in April, Last Sunday in October;
! Brazil standard
DaylightSavingPeriod,1st Sunday in October, Last Sunday in February;
! European Standard
DaylightSavingPeriod, Last Sunday in March, Last Sunday in October;
! Syria Standard
DaylightSavingPeriod, 4/1, 10/1;
```

Of course, these could not all appear in the same IDF as only one DaylightSavingPeriod object per input file is allowed. More information on Daylight Saving Periods can be seen on the web at: http://www.webexhibits.org/daylightsaving/

GroundTemperatures

Ground temperatures are used for the current simple ground temperature model. There can be only one ground temperature object included, and it is used as the outside surface temperature for all surfaces with OutsideFaceEnvironment=Ground. The outside surface temperature for individual surfaces can be modified using the OtherSideCoefficients (ref: Other Side Coefficients) object which allows Toutside to be a linear function of the current ground temperature. The result is a ground temperature profile similar to the ground temperature object, but scaled up or down by a constant multiplier for the twelve months. It is suggested that the ground temperature object values be the ones that cause the largest heat flux, and the modified profiles be used for surfaces that will have smaller heat fluxes. A more detailed explanation of Ground Heat Transfer is given in the Auxiliary Programs document.

Note that the ground temperatures included in full year weather files may not be suitable of being used directly in these fields – thus, there is no method to select them from an "attached" weather file. The ground temperatures included in the weather converter (and weather file) calculations are for "undisturbed" soil of "typical" conditions – hardly the appropriate soil under a typical building.

Field: Month Temperature(s) – 12 fields in all

Each numeric field is the monthly ground temperature (degrees Celsius) used for the indicated month (January=1st field, February=2nd field, etc.)

```
GroundTemperatures,
       \unique-object
       \min-fields 12
  N1 , \field January Ground Temperature
       \required-field
       \units C
       \type real
       \default 13
  N2 , \field February Ground Temperature
       \required-field
       \units C
       \type real
       \default 13
  N3 , \field March Ground Temperature
       \required-field
       \units C
       \type real
       \default 13
  N4 , \field April Ground Temperature
       \required-field
       \units C
       \type real
       \default 13
  N5 , \field May Ground Temperature
       \required-field
       \units C
       \type real
       \default 13
  N6 , \field June Ground Temperature
       \required-field
       \units C
       \type real
       \default 13
  N7 , \field July Ground Temperature
       \required-field
       \units C
       \type real
       \default 13
  N8 , \field August Ground Temperature
       \required-field
       \units C
       \type real
       \default 13
  N9 , \field September Ground Temperature
       \required-field
       \units C
       \type real
       \default 13
  N10, \field October Ground Temperature
       \required-field
       \units C
       \type real
       \default 13
  N11, \field November Ground Temperature
       \required-field
       \units C
       \type real
       \default 13
  N12; \field December Ground Temperature
       \required-field
       \units C
       \type real
       \default 13
```

And, the IDF example:

```
GroundTemperatures,  1.22222233E+01,  1.27777786E+01,  1.44444447E+01,  1.66666679E+01,  1.94444447E+01,
2.33333340E+01,  2.22222233E+01,  2.00000000E+01,  1.77777786E+01,  1.66666679E+01,  1.44444447E+01,
1.27777786E+01;
```

GroundReflectances

Ground reflectance values are used to calculate the ground reflected solar amount. This fractional amount (entered monthly) is used in the following equation:

$$\text{GroundReflectedSolar}=(\text{BeamSolar} \bullet \text{COS}(\text{SunZenithAngle})+\text{DiffuseSolar}) \bullet \text{GroundReflectance}$$

Of course, the Ground Reflected Solar is never allowed to be negative. The ground reflectance can be further modified when snow is on the ground by the Snow Ground Reflectance Modifier. To use no ground reflected solar in your simulation, enter 0.0 for each month.

Field: January Average Ground Reflectance

This field is a decimal number between 0.0 and 1.0 and is used to characterize the average reflectivity of the ground in January.

Field: February Average Ground Reflectance

This field is a decimal number between 0.0 and 1.0 and is used to characterize the average reflectivity of the ground in February.

Field: March Average Ground Reflectance

This field is a decimal number between 0.0 and 1.0 and is used to characterize the average reflectivity of the ground in March.

Field: April Average Ground Reflectance

This field is a decimal number between 0.0 and 1.0 and is used to characterize the average reflectivity of the ground in April.

Field: May Average Ground Reflectance

This field is a decimal number between 0.0 and 1.0 and is used to characterize the average reflectivity of the ground in May.

Field: June Average Ground Reflectance

This field is a decimal number between 0.0 and 1.0 and is used to characterize the average reflectivity of the ground in June.

Field: July Average Ground Reflectance

This field is a decimal number between 0.0 and 1.0 and is used to characterize the average reflectivity of the ground in July.

Field: August Average Ground Reflectance

This field is a decimal number between 0.0 and 1.0 and is used to characterize the average reflectivity of the ground in August.

Field: September Average Ground Reflectance

This field is a decimal number between 0.0 and 1.0 and is used to characterize the average reflectivity of the ground in September.

Field: October Average Ground Reflectance

This field is a decimal number between 0.0 and 1.0 and is used to characterize the average reflectivity of the ground in October.

Field: November Average Ground Reflectance

This field is a decimal number between 0.0 and 1.0 and is used to characterize the average reflectivity of the ground in November.

Field: December Average Ground Reflectance

This field is a decimal number between 0.0 and 1.0 and is used to characterize the average reflectivity of the ground in December.

The IDD Definition:

```
GroundReflectances,
  \unique-object
  \min-fields 12
  N1 , \field January Ground Reflectance
        \default 0.2
        \type real
        \minimum 0.0
        \maximum 1.0
        \units dimensionless
   N2 , \field February Ground Reflectance
        \default 0.2
        \type real
        \minimum 0.0
        \maximum 1.0
        \units dimensionless
   N3 , \field March Ground Reflectance
        \default 0.2
        \type real
        \minimum 0.0
        \maximum 1.0
        \units dimensionless
   N4 , \field April Ground Reflectance
        \default 0.2
        \type real
        \minimum 0.0
        \maximum 1.0
        \units dimensionless
```

```
  N5 , \field May Ground Reflectance
       \default 0.2
       \type real
       \minimum 0.0
       \maximum 1.0
       \units dimensionless
  N6 , \field June Ground Reflectance
       \default 0.2
       \type real
       \minimum 0.0
       \maximum 1.0
       \units dimensionless
  N7 , \field July Ground Reflectance
       \default 0.2
       \type real
       \minimum 0.0
       \maximum 1.0
       \units dimensionless
  N8 , \field August Ground Reflectance
       \default 0.2
       \type real
       \minimum 0.0
       \maximum 1.0
       \units dimensionless
  N9 , \field September Ground Reflectance
        \default 0.2
        \type real
        \minimum 0.0
        \maximum 1.0
        \units dimensionless
  N10 , \field October Ground Reflectance
        \default 0.2
        \type real
        \minimum 0.0
        \maximum 1.0
        \units dimensionless
  N11 , \field November Ground Reflectance
        \default 0.2
        \type real
        \minimum 0.0
        \maximum 1.0
        \units dimensionless
  N12 ; \field December Ground Reflectance
        \default 0.2
        \type real
        \minimum 0.0
        \maximum 1.0
        \units dimensionless
```

And use in an IDF:

```
 GroundReflectances,
    0.600,     !January Ground Reflectance
    0.600,     !February Ground Reflectance
    0.400,     !March Ground Reflectance
    0.300,     !April Ground Reflectance
    0.200,     !May Ground Reflectance
    0.200,     !June Ground Reflectance
    0.200,     !July Ground Reflectance
    0.200,     !August Ground Reflectance
    0.200,     !September Ground Reflectance
    0.200,     !October Ground Reflectance
    0.300,     !November Ground Reflectance
    0.400;     !December Ground Reflectance
```

Snow Ground Reflectance Modifiers

It is generally accepted that snow resident on the ground increases the basic ground reflectance. EnergyPlus allows the user control over the snow ground reflectance for both “normal ground reflected solar” calculations (see above) and snow ground reflected solar

modified for daylighting. These are entered under this object and both default to 1 (same as normal ground reflectance – no special case for snow which is a conservative approach).

Field: Ground Reflected Solar Modifier

This field is a decimal number between 0.0 and 1.0 which is used to modified the basic monthly ground reflectance when snow is on the ground (from design day input or weather data values).

$$\text{GroundReflectance}_{\text{used}} = \text{GroundReflectance} \bullet Modifier_{Snow}$$

Field: Daylighting Reflected Solar Modifier

This field is a decimal number between 0.0 and 1.0 which is used to modified the basic monthly ground reflectance when snow is on the ground (from design day input or weather data values).

$$\text{DaylightingGroundReflectance}_{\text{used}} = \text{GroundReflectance} \bullet Modifier_{Snow}$$

```
Snow Ground Reflectance Modifiers,
  N1, \field Ground Reflected Solar Modifier
  \minimum 0.0
  \default 1.0
 \note Value for modifying the "normal" ground reflectance when Snow is on ground
 \note  when calculating the "Ground Reflected Solar Radiation Value"
 \note  a value of 1.0 here uses the "normal" ground reflectance
 \note  Ground Reflected Solar = (BeamSolar*CosSunZenith + DiffuseSolar)*GroundReflectance
 \note  This would be further modified by the Snow Ground Reflectance Modifier when Snow was on the ground
 \note  When Snow on ground, effective GroundReflectance is
 \note      normal GroundReflectance*"Ground Reflectance Snow Modifier"
 \note  Ground Reflectance achieved in this manner will be restricted to [0.0,1.0]
  N2; \field Daylighting Ground Reflected Solar Modifier
  \minimum 0.0
  \default 1.0
 \note Value for modifying the "normal" daylighting ground reflectance when Snow is on ground
 \note  when calculating the "Ground Reflected Solar Radiation Value"
 \note  a value of 1.0 here uses the "normal" ground reflectance
 \note  Ground Reflected Solar = (BeamSolar*CosSunZenith + DiffuseSolar)*GroundReflectance
 \note  This would be further modified by the Snow Ground Reflectance Modifier when Snow was on the ground
 \note   When Snow on ground, effective GroundReflectance is
 \note   normal GroundReflectance*"Daylighting Ground Reflectance Snow Modifier"
 \note  Ground Reflectance achieved in this manner will be restricted to [0.0,1.0]
```

Outputs will show both the inputs from the above object as well as monthly values for both Snow Ground Reflectance and Snow Ground Reflectance for Daylighting.

Climate Group Outputs

Climate related variables appear in two places for EnergyPlus outputs. When the simple (monthly) GroundTemperature input is done and for all location data, lines appear in the eplusout.eio file:

```
! <GroundTemperatures>, Months From Jan to Dec {Deg C}
 GroundTemperatures,  12.22,  12.78,  14.44,  16.67,  19.44,  23.33,  22.22,  20.00,  17.78,  16.67,
14.44,  12.78
! <Location>, Location Name, Latitude, Longitude, Time Zone Number, Elevation {m}
 Location, DENVER COLORADO,   39.75, -104.87,   -7.00,      1610.26
! <GroundReflectances>, Months From Jan to Dec {dimensionless}
 GroundReflectances,  0.60,  0.60,  0.40,  0.30,  0.20,  0.20,  0.20,  0.20,  0.20,  0.20,  0.20,  0.40
! <Snow Ground Reflectance Modifiers>, Normal, Daylighting {dimensionless}
 Snow Ground Reflectance Modifiers,   1.000,   1.000
! <Snow GroundReflectances>, Months From Jan to Dec {dimensionless}
 Snow GroundReflectances,  0.60,  0.60,  0.40,  0.30,  0.20,  0.20,  0.20,  0.20,  0.20,  0.20,  0.20,
0.40
! <Snow GroundReflectances For Daylighting>, Months From Jan to Dec {dimensionless}
 Snow GroundReflectances For Daylighting,  0.60,  0.60,  0.40,  0.30,  0.20,  0.20,  0.20,  0.20,  0.20,
0.20,  0.20,  0.40
```

In addition for each “environment” simulated, information about the environment is shown:

```
! <Environment>,Environment Name,Environment Type, Start Date, End Date, Start DayOfWeek, Duration
{#days}, Source:Start DayOfWeek,  Use Daylight Saving, Use Holidays, Apply Weekend Holiday Rule
! <Environment:Special Days>, Special Day Name, Special Day Type, Source, Start Date, Duration {#days}
! <Environment:Daylight Saving>, Daylight Saving Indicator, Source, Start Date, End Date
! <Environment:Design_Day_Misc>,DayOfYear,ASHRAE A Coeff,ASHRAE B Coeff,ASHRAE C Coeff,Solar Constant-
Annual Variation,Eq of Time {minutes}, Solar Declination Angle {deg}
! <Environment:WarmupDays>, NumberofWarmupDays
```

For example, a DesignDay:

```
Environment,PHOENIX ARIZONA WINTER,DesignDay, 1/21, 1/21,MONDAY,  1,N/A,N/A,N/A,N/A
Environment:Daylight Saving,No,DesignDay
Environment:Design_Day_Misc, 21,1228.9,0.1414,5.7310E-002,1.0,-11.14,-20.0
```

Or a RunPeriod:

```
Environment,CHICAGO IL TMY2-94846 WMO#=725300,WeatherRunPeriod, 1/
1,12/31,SUNDAY,365,UseWeatherFile,Yes,Yes,No
Environment:Daylight Saving,No,
Environment:Special Days,NEW YEARS DAY,Holiday,WeatherFile, 1/ 1,  1
Environment:Special Days,MEMORIAL DAY,Holiday,WeatherFile, 5/31,  1
Environment:Special Days,INDEPENDENCE DAY,Holiday,WeatherFile, 7/ 5,  1
Environment:Special Days,LABOR DAY,Holiday,WeatherFile, 9/ 6,  1
Environment:Special Days,THANKSGIVING,Holiday,WeatherFile,11/25,  1
Environment:Special Days,CHRISTMAS,Holiday,WeatherFile,12/25,  1
Environment:WarmupDays,  4
```

Note that in this display, using “weekend rule” and specific date holidays, the actual observed dates are shown in the output display – in the example above, Independence Day (July 4) is actually observed on July 5.

Weather Data Related Outputs

Variables related to ambient environment data are available at timestep and higher resolutions. Below is a variable dictionary of these variables and subsequent definitions:

```
Zone,Average,Outdoor Dry Bulb [C]
Zone,Average,Outdoor Dew Point [C]
Zone,Average,Outdoor Wet Bulb [C]
Zone,Average,Outdoor Barometric Pressure [Pa]
Zone,Average,Outdoor Relative Humidity [%]
Zone,Average,Outdoor Humidity Ratio [kgWater/kgAir]
Zone,Average,Wind Speed [m/s]
Zone,Average,Wind Direction [degree]
Zone,Average,Sky Temperature [C]
Zone,Average,Diffuse Solar [W/m2]
Zone,Average,Direct Solar [W/m2]
Zone,Average,Ground Reflected Solar [W/m2]
Zone,Average,Ground Temperature [C]
```

```
Zone,Average,Outdoor Enthalpy [J/kg]
Zone,Average,Outdoor Air Density [kg/m3]
Zone,Average,Solar Azimuth Angle [degree]
Zone,Average,Solar Altitude Angle [degree]
Zone,Average,Solar Hour Angle [degree]
```

Note that these data values may be interpolated from "hour" points (ref: Weather Data Hourly Interpolation). The data values represent the "average" over the reporting resolution period.

Field: Outdoor Dry Bulb [C]

This is the outdoor dry bulb temperature in degrees C.

Field: Outdoor Dew Point [C]

This is the outdoor dew point temperature in degrees C.

Field: Outdoor Wet Bulb [C]

The outdoor wet bulb temperature is derived (at the timestep) from the values for dry bulb temperature, humidity ratio and barometric pressure.

Field: Outdoor Barometric Pressure [Pa]

This is the atmospheric/barometric pressure in Pa.

Field: Outdoor Relative Humidity [%]

This is the outdoor relative humidity expressed in percent.

Field: Outdoor Humidity Ratio [kgWater/kgAir]

The outdoor humidity ratio is derived (at the timestep) from the dry bulb temperature, relative humidity and barometric pressure.

Field: Wind Speed [m/s]

This is the outdoor wind speed in m/s.

Field: Wind Direction [degree]

This is the wind direction (N=0, E=90, S=180, W=270).

Field: Sky Temperature [C]

The sky temperature is derived from horizontal IR. It is expressed in degrees C. Note that Sigma is the Stefan-Boltzmann constant in the following equation:

$$Sky\ Temperature = \left(\frac{Horizontal\ IR}{Sigma}\right)^{\frac{1}{4}} - 273.15_{Conversion\ from\ Kelvin\ to\ Centigrade}$$

Field: Diffuse Solar [W/m2]

Diffuse solar is the amount of solar radiation in W/m^2 received from the sky (excluding the solar disk) on a horizontal surface.

Field: Direct Solar [W/m2]

Direct solar is amount of solar radiation in W/m^2 received within a 5.7° field of view centered on the sun. This is also known as Beam Solar.

Field: Ground Reflected Solar [W/m2]

The ground reflected solar amount (W/m^2) is derived from the Beam Solar, Diffuse Solar, User specified Ground Reflectance (for month) and Solar Altitude Angle:

$$Groundreflectedsolar = \left(Beamsolar \bullet COS(SolarAltitudeAngle) + Diffusesolar\right) \bullet \text{Groundreflectance}_{\text{month}}$$

where if the calculation returns a value < 0.0, then 0.0 will be reported.

Field: Ground Temperature [C]

The ground temperature is reported in degrees C – this is a user-specified input by month.

Field: Outdoor Enthalpy [J/kg]

Outdoor enthalpy is derived at each timestep from the Outdoor Dry Bulb and the Outdoor Humidity Ratio. It is reported in J/kg.

Field: Outdoor Air Density [kg/m3]

Outdoor air density is derived at each timestep from the Outdoor Barometric Pressure, the Outdoor Dry Bulb temperature and the Outdoor Humidity Ratio. It is reported in units kg/m^3.

Field: Solar Altitude Angle [degree]

The Solar Altitude Angle (β) is the angle of the sun above the horizontal (degrees).

Field: Solar Azimuth Angle [degree]

The Solar Azimuth Angle (ϕ) is measured from the North (clockwise) and is expressed in degrees. This is shown more clearly in the following figure.

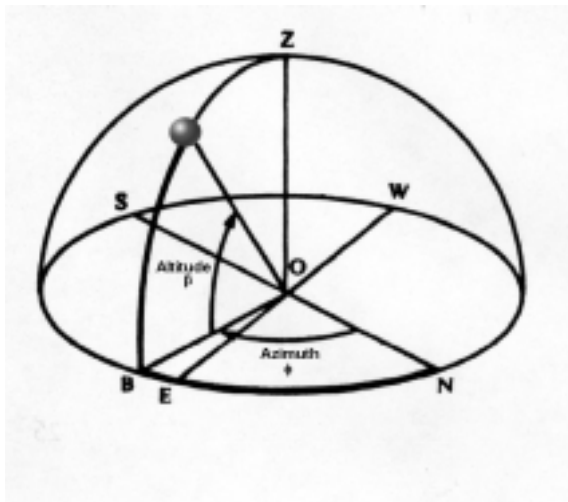

Figure 4. Solar Position Illustration

Field: Solar Hour Angle [degree]

The Solar Hour Angle (*H*) gives the apparent solar time for the current time period (degrees). It is common astronomical practice to express the hour angle in hours, minutes and seconds of time rather than in degrees. You can convert the hour angle displayed from EnergyPlus to time by dividing by 15. (Note that 1 hour is equivalent to 15 degrees; 360° of the Earth's rotation takes place every 24 hours.) The relationship of angles in degrees to time is shown in the following table:

Table 2. Relationship of Angles (degrees) to Time

Unit of Angle	Equivalent time
1 radian	3.819719 hours
1 degree	4 minutes
1 arcmin	4 seconds
1 arcsec	0.066667 seconds

Solar Position

The sun's position in the sky is expressed in terms of the solar altitude and the solar azimuth. Further, these angles depend on the local latitude, the solar declination (which is a function of the date) and the apparent solar time (solar hour angle).

Group – Schedules

This group of objects allows the user to influence scheduling of many items (such as occupancy density, lighting, thermostatic controls, occupancy activity). In addition, schedules are used to control shading element density on the building.

EnergyPlus schedules consist of three pieces: a day description, a week description, and an annual description. An optional element is the schedule type. Each description level builds off the previous sub-level. The day description is simply a name and the 24 hourly values to be associated with that name. The week description also has an identifier (name) and twelve additional names corresponding to previously defined day descriptions. There are names for each individual day of the week plus holiday, summer design day, winter design day and two

more custom day designations. Finally, the annual schedule contains an identifier and the names and FROM-THRU dates of the week schedules associate with this annual schedule. The annual schedule can have several FROM-THRU date pairs.

Schedules are processed by the EnergyPlus Schedule Manager, stored within the Schedule Manager and are accessed through module routines to get the basic values (timestep, hourly, etc).

Day Type

A brief description of "Day Type" which is used in the Design Day object, Special Day Period object, the Sizing objects and also used by reference in the Week Schedule object (discussed later in this section).

Schedules work on days of the week as well as certain specially designated days. Days of the week are the normal – Sunday, Monday, Tuesday, Wednesday, Thursday, Friday and Saturday. Special day types that can be designated are: Holiday, SummerDesignDay, WinterDesignDay, CustomDay1, CustomDay2. These day types can be used at the user's convenience to designate special scheduling (e.g. lights, electric equipment, set point temperatures) using these days as reference.

For example, a normal office building may have normal "occupancy" rules during the weekdays but significantly different use on weekend. For this, you would set up rules/schedules based on the weekdays (Monday through Friday, in the US) and different rules/schedules for the weekend (Saturday and Sunday, in the US). However, you could also specially designate SummerDesignDay and WinterDesignDay schedules for sizing calculations. These schedules can be activated by setting the Day Type field in the Design Day object to the appropriate season (**SummerDesignDay** for cooling design calculations; **WinterDesignDay** for heating design calculations).

In a different building, such as a theater/playhouse, the building may only have occupancy during certain weeks of the year and/or certain hours of certain days. If it was every week, you could designate the appropriate values during the "regular" days (Sunday through Saturday). But this would also be an ideal application for the "CustomDay1" and/or "CustomDay2". Here you would set the significant occupancy, lighting, and other schedules for the custom days and use unoccupied values for the normal weekdays. Then, using a weather file and setting SpecialDayPeriods as appropriate, you will get the "picture" of the building usage during the appropriate periods.

ScheduleType

A "schedule type" can be used to validate portions of the other schedules.

Field: ScheduleType Name

This alpha field should contain a unique (within the schedule types) designator. It is referenced wherever "ScheduleTypes" can be referenced.

Field: range

Since schedule values, in their base descriptions, are all numeric, this field will represent the min and max range for the values. If this field is left blank, then the schedule type is not limited to a minimum/maximum value range.

Field: Numeric Type

This field designates how the range values are validated. Using **CONTINUOUS** in this field allows for all numbers, including fractional amounts, within the range to be valid. Using

DISCRETE in this field allows only integer values between the minimum and maximum range values to be valid.

```
ScheduleType,
       \memo ScheduleType contains ScheduleTypes for DAYSCHEDULE, and SCHEDULE
  A1,  \field ScheduleType Name
       \reference ScheduleTypeNames
       \memo used to validate ScheduleType in SCHEDULE and DAYSCHEDULE objects
  A2,  \field range
       \note put in minimum:maximum here or blank if not a limited value, e.g. 0.0:1.0 for fraction
  A3;  \field Numeric Type
       \note Numeric type is either Continuous (all numbers within the min and
       \note max are valid or Discrete (only integer numbers between min and
       \note max are valid.  (Could also allow REAL and INTEGER to mean the
       \note same things
       \type choice
       \key CONTINUOUS
       \key DISCRETE
```

Several IDF Examples will illustrate the use:

```
ScheduleType,Any Number;  ! Not limited
ScheduleType,Fraction, 0.0 : 1.0 ,CONTINUOUS;
ScheduleType,Temperature,-60:200,CONTINUOUS;
ScheduleType,Control Type,0:4,DISCRETE;
ScheduleType,On/Off,0:1,DISCRETE;
```

DaySchedule

The DaySchedule contains an hour-by-hour profile for a single simulation day.

Field: Name

This field should contain a unique (within all DaySchedules) designation for this schedule. It is referenced by WeekSchedules to define the appropriate schedule values.

Field: ScheduleType

This field contains a reference to the ScheduleType. If found in a list of ScheduleTypes (see above), then the restrictions on the ScheduleType will be used to validate the hourly field values (below).

Field: Hour Values (1-24)

These fields contain the hourly values for each of the 24 hours in a day. (Hour field 1 represents clock time 00:00:01 AM to 1:00:00 AM, hour field 2 is 1:00:01 AM to 2:00:00 AM, etc.) The values in these fields will be passed to the simulation as indicated for “scheduled” items.

```
DAYSCHEDULE,
       \min-fields 26
       \memo A DAYSCHEDULE contains 24 values for each hour of the day.
  A1 , \field Name
       \required-field
       \type alpha
       \reference DayScheduleNames
  A2 , \field ScheduleType
       \type object-list
       \object-list ScheduleTypeNames
  N1 , \field Hour 1
       \type real
       \default 0
  N2 , \field Hour 2
       \type real
       \default 0
-- etc to 24 hour values
```

For brevity each of the hour fields is not listed here – see the IDD for complete definition. An IDF example:

```
DAYSCHEDULE, Day On Peak, Fraction,
        0.,0.,0.,0.,0.,0.,0.,0.,0.,1.,1.,1.,1.,1.,1.,1.,1.,1.,0.,0.,0.,0.,0.,0.;
```

WeekSchedule

Field: Name

This field should contain a unique (within all WeekSchedules) designation for this schedule. It is referenced by Schedules to define the appropriate schedule values.

Field: Day Type Fields (12 day types – Sunday, Monday, …)

These fields contain DaySchedule names for the appropriate day types. Days of the week (or special days as described earlier) will then use the indicated hourly profile as the actual schedule value.

```
WEEKSCHEDULE,
  \min-fields 13
       \memo  A WEEKSCHEDULE contains 12 DAYSCHEDULES, one for each day type.
  A1 , \field Name
       \required-field
       \reference WeekScheduleNames
       \type alpha
  A2 , \field Sunday DAYSCHEDULE Name
       \required-field
       \type object-list
       \object-list DayScheduleNames
  A3 , \field Monday DAYSCHEDULE Name
       \required-field
       \type object-list
       \object-list DayScheduleNames
  A4 , \field Tuesday DAYSCHEDULE Name
       \required-field
       \type object-list
       \object-list DayScheduleNames
  A5 , \field Wednesday DAYSCHEDULE Name
       \required-field
       \type object-list
       \object-list DayScheduleNames
  A6 , \field Thursday DAYSCHEDULE Name
       \required-field
       \type object-list
       \object-list DayScheduleNames
  A7 , \field Friday DAYSCHEDULE Name
       \required-field
       \type object-list
       \object-list DayScheduleNames
  A8 , \field Saturday DAYSCHEDULE Name
       \required-field
       \type object-list
       \object-list DayScheduleNames
  A9 , \field Holiday DAYSCHEDULE Name
       \required-field
       \type object-list
       \object-list DayScheduleNames
  A10, \field SummerDesignDay DAYSCHEDULE Name
       \required-field
       \type object-list
       \object-list DayScheduleNames
  A11, \field WinterDesignDay DAYSCHEDULE Name
       \required-field
       \type object-list
       \object-list DayScheduleNames
  A12, \field CustomDay1 DAYSCHEDULE Name
       \required-field
       \type object-list
       \object-list DayScheduleNames
  A13; \field CustomDay2 DAYSCHEDULE Name
       \required-field
       \type object-list
       \object-list DayScheduleNames
```

An IDF example:

```
WEEKSCHEDULE, Week on Peak,
        Day On Peak,Day On Peak,Day On Peak,
        Day On Peak,Day On Peak,Day On Peak,
        Day On Peak,Day On Peak,Day On Peak,
        Day On Peak,Day On Peak,Day On Peak;
```

Schedule

Each schedule entered must cover the entire year or a fatal error will result.

Field: Name

This field should contain a unique (within all Schedules) designation for this schedule. It is referenced by various “scheduled” items (e.g. Lights, People, Infiltration) to define the appropriate schedule values.

Field: ScheduleType

This field contains a reference to the ScheduleType. If found in a list of ScheduleTypes (see above), then the restrictions on the ScheduleType could be used to validate the referenced WeekSchedule (which reference DaySchedule) hourly field values. Currently, this feature is not enforced or the Schedule command.

Field Set (WeekSchedule, Start Month and Day, End Month and Day)

Each of the designated fields is used to fully define the schedule values for the indicated time period). Up to 53 sets can be used. An error will be noted and EnergyPlus will be terminated if an incomplete set is entered. Missing time periods will also be noted as warning errors; for these time periods a zero (0.0) value will be returned when a schedule value is requested. Each of the sets has the following 5 fields:

Field: Name of WEEKSCHEDULE

This field contains the appropriate WeekSchedule name for the designated time period.

Field: Start Month

This numeric field is the starting month for the schedule time period.

Field: Start Day

This numeric field is the starting day for the schedule time period.

Field: End Month

This numeric field is the ending month for the schedule time period.

Field: End Day

This numeric field is the ending day for the schedule time period.

```
SCHEDULE,
 \min-fields 7
       \memo A SCHEDULE contains from 1 to 52 WEEKSCHEDULES
  A1 , \field Name
       \required-field
       \type alpha
       \reference ScheduleNames
  A2 , \field ScheduleType
       \type object-list
       \object-list ScheduleTypeNames
  A3 , \field Name of WEEKSCHEDULE 1
       \required-field
       \type object-list
       \object-list WeekScheduleNames
  N1 , \field Start Month 1
       \required-field
       \type integer
       \minimum 1
       \maximum 12
  N2 , \field Start Day 1
       \required-field
       \type integer
       \minimum 1
       \maximum 31
  N3 , \field End Month 1
       \required-field
       \type integer
       \minimum 1
       \maximum 12
  N4 , \field End Day 1
       \required-field
       \type integer
       \minimum 1
       \maximum 31
  A4 , \field Name of WEEKSCHEDULE 2
       \type object-list
       \object-list WeekScheduleNames
  N5 , \field Start Month 2
       \type integer
       \minimum 1
       \maximum 12
  N6 , \field Start Day 2
       \type integer
       \minimum 1
       \maximum 31
  N7 , \field End Month 2
       \type integer
       \minimum 1
       \maximum 12
  N8 , \field End Day 2
       \type integer
       \minimum 1
       \maximum 31
-- etc to 53 weekschedule "field sets"
```

For brevity, the entire definition of week schedules is not included here. See the actual IDD for full definition.

Note that there are many possible periods to be described. An IDF example with a single period:

```
SCHEDULE, On Peak, Fraction,
        Week On Peak, 1,1, 12,31;
```

And a multiple period illustration:

```
SCHEDULE,CoolingCoilAvailSched,Fraction,
        FanAndCoilAllOffWeekSched, 1,1, 3,31,
        FanAndCoilSummerWeekSched, 4,1, 9,30,
        FanAndCoilAllOffWeekSched, 10,1, 12,31;
```

The following definition will generate an error (if any scheduled items are used in the simulation):

```
SCHEDULE,MySchedule,Fraction,4,1,9,30;
```

Schedule Outputs

No direct outputs relate to schedules.

Group – Surface Construction Elements

This group of objects describes the physical properties and configuration for the building envelope and interior elements. That is, the walls, roofs, floors, windows, doors for the building.

Specifying the Building Envelope

Building element constructions in EnergyPlus are built from the basic thermal and other material property parameters in physical constructions. Materials are specified by types and named. Constructions are defined by the composition of materials. Finally, surfaces are specified for the building with geometric coordinates as well as referenced constructions.

Materials

There are three material "types" which may be used to describe layers within opaque construction elements. The choice of which of these types to use is left up to the user. However, some guidance as to which material type to use is appropriate before describing each in detail. The three opaque types are:

- Material:Regular
- Material:Regular-R
- Material:Air

Material:Regular is the "preferred" type of material. This requires knowledge of many of the thermal properties of the material, but it allows EnergyPlus to take into account the thermal mass of the material and thus allows the evaluation of transient conduction effects. Material:Regular-R is similar in nature but only requires the thermal resistance (R-value) rather than the thickness, thermal conductivity, density, and specific heat. Note that using a simple R-value only material forces EnergyPlus to assume steady state heat conduction through this material layer. Finally, Material:Air should only be used for an air gap between other layers in a construction. This type assumes that air is sufficiently lightweight to require only an R-value. In addition, since it is not exposed to any external environment, surface properties such as absorptance are not necessary.

There are two material additions that can be made to the basic material properties. These two additional material types are:

- MaterialProperty:Moisture:MTF
- MaterialProperty:Moisture:EMPD

These two material objects are used in conjunction with the basic material specification and reference back to the name of the basic material type. Without the basic material type specified the program, will give a severe error and terminate. Specifying the moisture

materials and changing the Solution Algorithm to a moisture simulation will allow the moisture simulation to take place.

Material:Regular

This definition should be used when the four main thermal properties (thickness, conductivity, density, and specific heat) of the material are known. This syntax is used to describe opaque construction elements only.

Field: Name

This field is a unique reference name that the user assigns to a particular material. This name can then be referred to by other input data (ref: Construction).

Field: Roughness

This field is a character string that defines the relative roughness of a particular material layer. This parameter only influences the convection coefficients, more specifically the exterior convection coefficient. A special keyword is expected in this field with the options being “VeryRough”, “MediumRough”, “Rough”, “Smooth”, “MediumSmooth”, and “VerySmooth” in order of roughest to smoothest options.

Field: Thickness

This field characterizes the thickness of the material layer in meters. This should be the dimension of the layer in the direction perpendicular to the main path of heat conduction. This value must be a positive.

Field: Conductivity

This field is used to enter the thermal conductivity of the material layer. Units for this parameter are W/(m-K). Thermal conductivity must be greater than zero.

Field: Density

This field is used to enter the density of the material layer in units of kg/m^3. Density must be a positive quantity.

Field: Specific Heat

This field represents the specific heat of the material layer in units of J/(kg-K). Note that these units are most likely different than those reported in textbooks and references which tend to use kJ/(kg-K) or J/(g-K). They were chosen for internal consistency within EnergyPlus. Only positive values of specific heat are allowed.

Field: Absorptance:Thermal

The thermal absorptance field in the Material input syntax represents the fraction of incident long wavelength radiation that is absorbed by the material. This parameter is used when calculating the long wavelength radiant exchange between various surfaces and affects the surface heat balances (both inside and outside as appropriate). Values for this field must be between 0.0 and 1.0 (with 1.0 representing “black body” conditions).

Field: Absorptance:Solar

The solar absorptance field in the Material input syntax represents the fraction of incident short wavelength (solar) radiation that is absorbed by the material. This parameter is used when calculating the amount of incident solar radiation absorbed by various surfaces and

affects the surface heat balances (both inside and outside as appropriate). Values for this field must be between 0.0 and 1.0.

Field: Absorptance:Visible

The visible absorptance field in the Material input syntax represents the fraction of incident visible wavelength radiation that is absorbed by the material. Visible wavelength radiation is slightly different than solar radiation in that the visible band of wavelengths is much more narrow while solar radiation includes the visible spectrum as well as infrared and ultraviolet wavelengths. This parameter is used when calculating the amount of incident visible radiation absorbed by various surfaces and affects the surface heat balances (both inside and outside as appropriate) as well as the daylighting calculations. Values for this field must be between 0.0 and 1.0.

```
MATERIAL:REGULAR,
  A1 , \field Name
       \type alpha
       \reference MaterialName
  A2 , \field Roughness
       \type choice
       \key VeryRough
       \key MediumRough
       \key Rough
       \key Smooth
       \key MediumSmooth
       \key VerySmooth
  N1 , \field Thickness
       \units m
       \type real
       \minimum> 0
  N2 , \field Conductivity
       \units W/m-K
       \type real
       \minimum> 0
  N3 , \field Density
       \units kg/m3
       \type real
       \minimum> 0
  N4 , \field Specific Heat
       \units J/kg-K
       \type real
       \minimum> 0
  N5 , \field Absorptance:Thermal
       \type real
       \minimum> 0
       \default .9
       \maximum 1
  N6 , \field Absorptance:Solar
       \type real
       \default .7
       \minimum 0
       \maximum 1
  N7 ; \field Absorptance:Visible
       \type real
       \minimum 0
       \default .7
       \maximum 1
```

An IDF example:

```
MATERIAL:Regular,A2 - 4 IN DENSE FACE BRICK,  ! Material Name
 Rough,  ! Roughness
  0.1014984    ,  ! Thickness {m}
   1.245296    ,   ! Conductivity {W/M*K}
   2082.400    ,   ! Density {Kg/M**3}
  920.4800    ,   ! Specific Heat {J/Kg*K}
  0.9000000    ,   ! Thermal Absorptance
  0.9300000    ,   ! Solar Absorptance
  0.9300000    ;   ! Visible Absorptance
```

Material:Regular-R

Use this definition when only the Thermal Resistance (R value) of the material is known. This object is used to describe opaque construction elements.

Field: Name

This field is a unique reference name that the user assigns to a particular material. This name can then be referred to by other input data (ref: Construction, Movable Insulation).

Field: Roughness

This field is a character string that defines the relative roughness of a particular material layer. This parameter only influences the convection coefficients, more specifically the exterior convection coefficient. A special keyword is expected in this field with the options being “VeryRough”, “MediumRough”, “Rough”, “Smooth”, “MediumSmooth”, and “VerySmooth” in order of roughest to smoothest options.

Field: Thermal Resistance

This field is used to enter the thermal resistance (R-value) of the material layer. Units for this parameter are (m^2-K)/W. Thermal resistance must be greater than zero. Note that most R-values in the USA are calculated in Inch-Pound units and must be converted to the SI equivalent.

Field: Absorptance:Thermal

The thermal absorptance field in the Material input syntax represents the fraction of incident long wavelength radiation that is absorbed by the material. This parameter is used when calculating the long wavelength radiant exchange between various surfaces and affects the surface heat balances (both inside and outside as appropriate). Values for this field must be between 0.0 and 1.0 (with 1.0 representing “black body” conditions).

Field: Absorptance:Solar

The solar absorptance field in the Material input syntax represents the fraction of incident short wavelength (solar) radiation that is absorbed by the material. This parameter is used when calculating the amount of incident solar radiation absorbed by various surfaces and affects the surface heat balances (both inside and outside as appropriate). Values for this field must be between 0.0 and 1.0.

Field: Absorptance:Visible

The visible absorptance field in the Material input syntax represents the fraction of incident visible wavelength radiation that is absorbed by the material. Visible wavelength radiation is slightly different than solar radiation in that the visible band of wavelengths is much more narrow while solar radiation includes the visible spectrum as well as infrared and ultraviolet wavelengths. This parameter is used when calculating the amount of incident visible radiation absorbed by various surfaces and affects the surface heat balances (both inside

and outside as appropriate) as well as the daylighting calculations. Values for this field must be between 0.0 and 1.0.

```
MATERIAL:REGULAR-R,
  A1 , \field Name
       \type alpha
       \reference MaterialName
  A2 , \field Roughness
       \type choice
       \key VeryRough
       \key MediumRough
       \key Rough
       \key Smooth
       \key MediumSmooth
       \key VerySmooth
  N1 , \field Thermal Resistance
       \units m2-K/W
       \type real
       \minimum> 0
  N2 , \field Absorptance:Thermal
       \type real
       \minimum> 0
       \default .9
       \maximum 1
  N3 , \field Absorptance:Solar
       \type real
       \minimum 0
       \default .7
       \maximum 1
  N4 ; \field Absorptance:Visible
       \type real
       \minimum 0
       \default .7
       \maximum 1
```

An IDF example:

```
MATERIAL:Regular-R,R13LAYER,  ! Material Name
 Rough,  ! Roughness
   2.290965    ,  ! Resistance {M**2K/W}
  0.9000000    ,   ! Thermal Absorptance
  0.7500000    ,   ! Solar Absorptance
  0.7500000    ;   ! Visible Absorptance
```

Material:Air

This material is used to describe the air gap in an opaque construction element. Glass elements use a different property (WindowGas) to describe the air between two glass layers.

Field: Name

This field is a unique reference name that the user assigns to a particular material. This name can then be referred to by other input data (ref: Construction).

Field: Thermal Resistance

This field is used to enter the thermal resistance (R-value) of the material layer. Units for this parameter are (m^2-K)/W. Thermal resistance must be greater than zero. Note that most R-values in the USA are calculated in Inch-Pound units and must be converted to the SI equivalent.

```
MATERIAL:AIR,
       \memo Air Space in Opaque Construction
  A1 , \field Name
       \type alpha
       \reference MaterialName
  N1 ; \field Thermal Resistance
       \units m2-K/W
       \type real
       \minimum> 0
```

And, an IDF example:

```
MATERIAL:Air,B1 - AIRSPACE RESISTANCE,  ! Material Name
  0.1603675    ;  ! Resistance {M**2K/W}
```

MaterialProperty:Moisture:MTF

This material is used to describe the four moisture material properties that are used in the MTF (Moisture Transfer Function) solution algorithm. There are some special cases that needed to be handled with the MTF implementation. Using a layer-by-layer solution affords the possibility of handling these special cases, which would not be possible with the building surface solution technique. These special cases are impermeable layers and nearly impermeable layers. To handle these cases special algorithms have been implemented for a given layer and construction:

1) All layers are MTF layers, cannot mix and match with CTF layers or resistive layers. Need to specify all the heat and moisture material properties.

2) All layers are CTF layers, cannot mix with MTF layers. These layers will need the full heat material properties and cannot use resistive layers. This is specified by leaving D_v, $\gamma\left(T\right)$, and $\beta\left(\rho_v\right)$ set to zero. This set of conditions will trigger the standard CTF only calculation, and will solve the building element layer-by-layer.

3) One or more of the layers are nearly impermeable. This is where mixing and matching permeable and nearly impermeable layers in the same building element is possible. This is specified by leaving $\gamma\left(T\right)$ and $\beta\left(\rho_v\right)$ set to zero. This set of conditions will trigger the full MTF simplification for the specified layer.

Case 1 will handle building constructions that have layers that are permeable and have moisture capacitance. These are specified in the input by supplying the all the conduction and moisture material properties for each material used in that building element. Case 2 will handle layers where there are nearly impermeable layers and there is no need for the MTF solution in that construction. This case is used when you have some surfaces that you would like to simulate the moisture with other surfaces that a sensible only solution will suffice. Most of the time, the standard CTF solution will be used in lieu of this special case. Case 3 will handle building constructions with a vapor barrier and/or a paint layer.

One of the interesting capabilities of the layer-by-layer solution technique is that each layer can be customized to make the wall more realistic. For example adding a vapor barrier made of polyethylene would effectively keep moisture from being transmitted from one side to the other, with essentially no moisture capacitance in the polyethylene material itself. Nevertheless, its inclusion in the building element does affect the moisture transfer and storage on adjacent layers. To model this with the simultaneous heat and mass balance equations (Full MTF) cause difficulties with the mass equation. The time to effectively transfer moisture through this material is so long that the numerical precision of the transfer function series to model this becomes inaccurate. To handle this type of layer, a CTF series handles the heat transfer and a permeance equation is specified to handle the vapor diffusion. This is done by setting the material properties used specifically for moisture capacitance to zero, and they are the ones used to specify the moisture isotherm. Therefore,

if $\gamma\left(T\right)$ and $\beta\left(\rho_v\right)$ are set to zero this effectively eliminates the moisture capacitance in the layer and this simplifies the simulation to only handle permeance across the material layer.

This moisture model will be done when the appropriate MTF moisture materials are specified and the Solution Algorithm parameter is set to MTF.

> Warning!
>
> With the current implementation, it is difficult to use the MTF simulation approach for annual simulations without careful consideration of the moisture capacitance coefficients due to the moisture non-linearities. Please reference the MTF Moisture Material non-linearities in the Engineering manual for the limitations.

Field: Name

This field is a unique reference name that the user assigns to a particular material. This name can then be referred to by other input data (ref: Construction).

Field: Vapor Diffusivity

This field is used to enter the vapor diffusivity of the material layer. Units for this parameter are (m^2/s). Vapor Diffusivity must be greater than zero.

Field: Porosity

This field is used to enter the porosity or the void fraction of the material layer. Units for this parameter are (m^3/m^3). Porosity must be greater than zero.

Field: Thermal-Gradient

This field is used to enter the thermal-gradient coefficient □(T) for moisture capacity based on water vapor density. Units for this parameter are (kg/kg-K). This value is curve fit for the linear portion of the Moisture Capacitance curve that is suitable for the simulation.

Field: Isothermal Moisture Capacity

This field is used to enter the Isothermal moisture capacity □($\square_V$) based on the water vapor density of the material layer. Units for this parameter are (m^3/kg). This value is curve fit for the linear portion of the Moisture Capacitance curve that is suitable for the simulation.

```
MATERIALPROPERTY:MOISTURE:MTF,
    \memo Additional properties for moisture using MTF procedure
  A1 , \field Name
       \required-field
       \type object-list
       \object-list MaterialName
       \note Moisture Material Name that the moisture properties will be added to,
       \note this the material name for the basic material properties.
  N1 , \field Vapor Diffusivity
       \required-field
       \units m2/s
       \minimum 0.0
       \type real
  N2 , \field Porosity
       \required-field
       \units m3/m3
       \minimum 0.0
       \type real
  N3,  \field Thermal-Gradient Coeff for Moisture Capacity
       \required-field
       \units kg/kg-K
       \type real
  N4;  \field Isothermal moisture capacity
       \required-field
       \units m3/kg
       \type real
```

And, an IDF example showing how it is used in conjunction with the Material:Regular in synchronous pairs:

```
  MATERIAL:Regular,
    E1 - 3 / 4 IN PLASTER OR GYP BOARD,  !- Name
    Smooth,  !- Roughness
    1.9050000E-02,  !- Thickness {m}
    0.7264224,  !- Conductivity {W/m-K}
    1601.846,  !- Density {kg/m3}
    836.8000,  !- Specific Heat {J/kg-K}
    0.9000000,  !- Absorptance:Thermal
    0.9200000,  !- Absorptance:Solar
    0.9200000;  !- Absorptance:Visible

  MATERIALPROPERTY:MOISTURE:MTF,
    E1 - 3 / 4 IN PLASTER OR GYP BOARD,  !- Name
    5.263510E-06,  !- Vapor Diffusivity {m2/s}
    7.000000E-01,  !- Porosity {m3/m3}
    8.794000E-04,  !- Thermal-Gradient Coeff for Moisture Capacity {kg/kg-K}
    1.160200;  !- Isothermal moisture capacity {m3/kg}
```

MaterialProperty:Moisture:EMPD

This material is used to describe the five moisture material properties that are used in the EMPD (Effective Mean Penetration Depth) solution algorithm. The EMPD is a simplified, lumped moisture model that simulates moisture storage and release from material services. The model uses "actual" convective mass transfer coefficients that are determined by existing heat and mass transfer relationships, e.g. the Lewis relation. An effective moisture penetration depth may be determined from either experimental or detailed simulation data by using actual surface areas and moisture sorption isotherms.

This moisture model will be done when the appropriate EMPD moisture materials are specified and the Solution Algorithm parameter is set to EMPD

Field: Name

This field is a unique reference name that the user assigns to a particular material. This name can then be referred to by other input data (ref: Construction).

Field: EMPD Value

This field is used to enter the effective moisture penetration depth of the material layer. Units for this parameter are (m).

Field: Constants to Define Equilibrium Equation

The next four fields describe the sorption isotherm curve used for building materials. These four fields are dimensionless coefficients.

```
MATERIALPROPERTY:MOISTURE:EMPD,
    \memo Additional properties for moisture using EMPD procedure
  A1 , \field Name
       \required-field
       \type object-list
       \object-list MaterialName
       \note Moisture Material Name that the moisture properties will be added to.
       \note Additional material properties required to perform the EMPD model.
       \note Effective Mean Penetration Depth (EMPD)
  N1 , \field EMPD value
       \required-field
       \note This is the Penetration depth
       \units m
       \minimum 0.0
       \type real
  N2 , \field "a", coefficient to define equilibrium equation
       \required-field
       \type real
  N3 , \field "b", coefficient to define equilibrium equation
       \required-field
       \type real
  N4 , \field "c", coefficient to define equilibrium equation
       \required-field
       \type real
  N5 ; \field "d", coefficient to define equilibrium equation
       \required-field
       \type real
```

And, an IDF example showing how it is used in conjunction with the Material:Regular in synchronous pairs:

```
  MATERIAL:Regular,
    E1 - 3 / 4 IN PLASTER OR GYP BOARD,  !- Name
    Smooth,  !- Roughness
    1.9050000E-02,  !- Thickness {m}
    0.7264224,  !- Conductivity {W/m-K}
    1601.846,  !- Density {kg/m3}
    836.8000,  !- Specific Heat {J/kg-K}
    0.9000000,  !- Absorptance:Thermal
    0.9200000,  !- Absorptance:Solar
    0.9200000;  !- Absorptance:Visible

  MATERIALPROPERTY:MOISTURE:MTF,
    E1 - 3 / 4 IN PLASTER OR GYP BOARD,  !- Name
    5.263510E-06,  !- Vapor Diffusivity {m2/s}
    7.000000E-01,  !- Porosity {m3/m3}
    8.794000E-04,  !- Thermal-Gradient Coeff for Moisture Capacity {kg/kg-K}
    1.160200;  !- Isothermal moisture capacity {m3/kg}
```

Materials for Glass Windows and Doors

The following descriptions (WindowGlass, WindowGlass:AltInput, WindowGas, WindowGasMixture, WindowShade and WindowBlind) apply to glass windows and doors. The property definitions described herein for WindowGlass, WindowGas and WindowGasMixture are supported by the National Fenestration Rating Council as standard.

"Front side" is the side of the layer opposite the zone in which the window is defined. "Back side" is the side closest to the zone in which the window is defined. Therefore, for exterior windows, "front side" is the side closest to the outdoors. For interior windows, "front side" is the side closest to the zone adjacent to the zone in which the window is defined.

The solar radiation transmitted by the window layers enters the zone and is a component of the zone load. The solar radiation absorbed in each solid layer (glass, shade or blind) participates in the window layer heat balance calculation. The visible transmittance and reflectance properties of the window are used in the daylighting calculation.

Material:WindowGlass

In the following, for exterior windows, "front side" is the side of the glass closest to the outside air and "back side" is the side closest to the zone the window is defined in. For interzone windows, "front side" is the side closest to the zone adjacent to the zone the window is defined in and "back side" is the side closest to the zone the window is defined in.

Field: Name

The name of the glass layer. It corresponds to a layer in a window construction.

Field: Optical Data Type

If Optical Data Type = SpectralAverage, the values you enter for solar transmittance and reflectance are assumed to be averaged over the solar spectrum, and the values you enter for visible transmittance and reflectance are assumed to be averaged over the solar spectrum and weighted by the response of the human eye. There is an EnergyPlus Reference Data Set for Material:WindowGlass that contains spectral average properties for many different types of glass.

If Optical Data Type = Spectral, then, in the following field, you must enter the name of a spectral data set defined with the WindowGlassSpectralData object. In this case, the values of solar and visible transmittance and reflectance in the fields below should be blank.

Field: Name of Window Glass Spectral Data Set

If Optical Data Type = Spectral, this is the name of a spectral data set defined with a WindowGlassSpectralData object.

Field: Thickness

The surface-to-surface thickness of the glass (m).

Field: Solar Transmittance at Normal Incidence

Transmittance at normal incidence averaged over the solar spectrum. Used only when Optical Data Type = SpectralAverage.

For uncoated glass, when alternative optical properties are available—such as thickness, solar index of refraction, and solar extinction coefficient—they can be converted to equivalent solar transmittance and reflectance values using the equations given in "Conversion from Alternative Specification of Glass Optical Properties.")

Field: Solar Reflectance at Normal Incidence: Front Side

Front-side reflectance at normal incidence averaged over the solar spectrum. Used only when Optical Data Type = SpectralAverage.

Field: Solar Reflectance at Normal Incidence: Back Side

Back-side reflectance at normal incidence averaged over the solar spectrum. Used only when Optical Data Type = SpectralAverage.

Field: Visible Transmittance at Normal Incidence

Transmittance at normal incidence averaged over the solar spectrum and weighted by the response of the human eye. Used only when Optical Data Type = SpectralAverage.

For uncoated glass, when alternative optical properties are available—such as thickness, visible index of refraction, and visible extinction coefficient—they can be converted to equivalent visible transmittance and reflectance values using the equations given in "Conversion from Alternative Specification of Glass Optical Properties.")

Field: Visible Reflectance at Normal Incidence: Front Side

Front-side reflectance at normal incidence averaged over the solar spectrum and weighted by the response of the human eye. Used only when Optical Data Type = SpectralAverage.

Field: Visible Reflectance at Normal Incidence: Back Side

Back-side reflectance at normal incidence averaged over the solar spectrum and weighted by the response of the human eye. Used only when Optical Data Type = SpectralAverage.

Field: IR Transmittance at Normal Incidence

Long-wave transmittance at normal incidence.

Field: IR Hemispherical Emissivity: Front Side

Front-side long-wave emissivity.

Field: IR Hemispherical Emissivity: Back Side

Back-side long-wave emissivity.

Field: Conductivity

Thermal conductivity (W/m-K).

```
MATERIAL:WINDOWGLASS,
  A1 , \field Name
       \type alpha
       \reference MaterialName
  A2 , \field Optical Data Type
       \type choice
       \key SpectralAverage
       \key Spectral
  A3 , \field Name of Window Glass Spectral Data Set
       \note Used only when Optical Data Type = Spectral
  N1 , \field Thickness
       \units m
       \type real
       \minimum> 0
  N2 , \field Solar Transmittance at Normal Incidence
       \note Used only when Optical Data Type = SpectralAverage
       \type real
       \minimum 0
       \maximum< 1
       \default 0
  N3 , \field Solar Reflectance at Normal Incidence: Front Side
       \note Used only when Optical Data Type = SpectralAverage
       \note Front Side is side closest to outside air
       \type real
       \minimum 0
       \maximum< 1
       \default 0
  N4 , \field Solar Reflectance at Normal Incidence: Back Side
       \note Used only when Optical Data Type = SpectralAverage
       \note Back Side is side closest to zone air
       \type real
       \minimum 0
       \maximum< 1
       \default 0
```

```
  N5 , \field Visible Transmittance at Normal Incidence
       \note Used only when Optical Data Type = SpectralAverage
       \type real
       \minimum 0
       \maximum< 1
       \default 0
  N6 , \field Visible Reflectance at Normal Incidence: Front Side
       \note Used only when Optical Data Type = SpectralAverage
       \type real
       \minimum 0
       \maximum< 1
       \default 0
  N7 , \field Visible Reflectance at Normal Incidence: Back Side
       \note Used only when Optical Data Type = SpectralAverage
       \type real
       \minimum 0
       \maximum< 1
       \default 0
  N8 , \field IR Transmittance at Normal Incidence
       \type real
       \default 0
       \maximum< 1
       \minimum 0
       \default 0
  N9 , \field IR Hemispherical Emissivity: Front Side
       \type real
       \maximum< 1
       \minimum> 0
  N10, \field IR Hemispherical Emissivity: Back Side
       \type real
       \maximum< 1
       \minimum> 0
  N11; \field Conductivity
       \units W/m-K
       \type real
       \minimum> 0
```

IDF examples of Spectral average and using a Spectral data set:

```
MATERIAL:WINDOWGLASS, GLASS - CLEAR SHEET 1 / 8 IN,
  SpectralAverage, ! Optical data type
  0.003, ! Thickness {m} 1/8"
  0.850, ! Solar transmittance at normal incidence
  0.075, ! Solar reflectance at normal incidence: front side
  0.075, ! Solar reflectance at normal incidence: back side
  0.901, ! Visible transmittance at normal incidence
  0.081, ! Visible reflectance at normal incidence: front side
  0.081, ! Visible reflectance at normal incidence: back side
  0.0,   ! IR transmittance at normal incidence
  0.84,  ! IR hemispherical emissivity: front side
  0.84,  ! IR hemispherical emissivity: back side
  0.9;   ! Conductivity {W/m-K}

MATERIAL:WindowGlass,SPECTRAL GLASS INNER PANE, ! Material name
    Spectral, ! Optical data type {SpectralAverage or Spectral}
    TestSpectralDataSet, ! Name of spectral data set when Optical Data Type = Spectral
    0.0099, ! Thickness {m}
    ,  ! Solar transmittance at normal incidence
    ,  ! Solar reflectance at normal incidence: front side
    ,  ! Solar reflectance at normal incidence: back side
    ,  ! Visible transmittance at normal incidence
    ,  ! Visible reflectance at normal incidence: front side
    ,  ! Visible reflectance at normal incidence: back side
    0.0,   ! IR transmittance at normal incidence
    0.84,  ! IR emissivity: front side
    0.84,  ! IR emissivity: back side
    0.798; ! Conductivity {W/m-K}
```

Material:WindowGlass:AltInput

This is an alternative way of specifying glass properties. Index of refraction and extinction coefficient are given instead of the transmittance and reflectance values used in Material:WindowGlass. However, unlike Material:WindowGlass, Material:WindowGlass:AltInput is restricted to cases where the front and back optical properties of the glass are the same. This means it cannot be used for glass with a coating on one side. In that case Material:WindowGlass should be used. Also, unlike Material:WindowGlass, Material:WindowGlass:AltInput does not allow input of glass wavelength-by-wavelength (spectral) properties.

Field: Name

The name of the glass layer. It corresponds to a layer in a window construction.

Field: Thickness

The surface-to-surface thickness of the glass (m).

Field: Solar Index of Refraction

Index of refraction averaged over the solar spectrum.

Field: Solar Extinction Coefficient

Extinction coefficient averaged over the solar spectrum (m^{-1}).

Field: Visible Index of Refraction

Index of refraction averaged over the solar spectrum and weighted by the response of the human eye.

Field: Visible Extinction Coefficient

Extinction coefficient averaged over the solar spectrum and weighted by the response of the human eye (m^{-1}).

Field: IR Transmittance at Normal Incidence

Long-wave transmittance at normal incidence.

Field: IR Hemispherical Emissivity

Long-wave hemispherical emissivity, assumed the same on both sides of the glass.

Field: Conductivity

Thermal conductivity (W/m-K).

```
MATERIAL:WINDOWGLASS:AltInput,
    \memo Glass material properties for Windows or Glass Doors
    \memo Index of Refraction/Extinction Coefficient input method
    \memo Not to be used for coated glass
  A1 , \field Name
       \required-field
       \type alpha
       \reference MaterialName
  N1 , \field Thickness
       \required-field
       \units m
       \type real
       \minimum> 0.0
  N2 , \field Solar Index of Refraction
       \required-field
       \type real
       \minimum> 1.0
  N3 , \field Solar Extinction Coefficient
       \required-field
       \units 1/m
       \type real
       \minimum> 0.0
  N4 , \field Visible Index of Refraction
       \required-field
       \type real
       \minimum> 1.0
  N5 , \field Visible Extinction Coefficient
       \required-field
       \units 1/m
       \type real
       \minimum> 0.0
  N6 , \field IR Transmittance at Normal Incidence
       \type real
       \default 0.0
       \maximum< 1.0
       \minimum 0.0
       \default 0.0
  N7 , \field IR Hemispherical Emissivity
       \note Emissivity of front and back side assumed equal
       \type real
       \maximum< 1.0
       \minimum> 0.0
       \default 0.84
  N8 ; \field Conductivity
       \units W/m-K
       \type real
       \minimum> 0.0
       \default 0.9
```

An IDF example:

```
MATERIAL:WindowGlass:AltInput,4MM CLEAR GLASS, ! Material name
    0.004, ! Thickness {m}
    1.526, ! Solar index of refraction
    30.0 , ! Solar extinction coefficient (1/m)
    1.526, ! Visible index of refraction
    30.0 , ! Visible extinction coefficient (1/m)
    0.0,   ! IR transmittance at normal incidence
    0.84,  ! IR emissivity
    0.9;   ! Conductivity {W/m-K}
```

Conversion from Glass Optical Properties Specified as Index of Refraction and Transmittance at Normal Incidence

The optical properties of uncoated glass are sometimes specified by index of refraction, *n*, and transmittance at normal incidence, *T*.

The following equations show how to convert from this set of values to the transmittance and reflectance values required by Material:WindowGlass. These equations apply only to uncoated glass, and can be used to convert either spectral-average solar properties or

spectral-average visible properties (in general, *n* and *T* are different for the solar and visible). Note that since the glass is uncoated, the front and back reflectances are the same and equal to the *R* that is solved for in the following equations.

Given *n* and *T*, find *R*:

$$r = \left(\frac{n-1}{n+1}\right)^2$$

$$\tau = \frac{\left[(1-r)^4 + 4r^2T^2\right]^{1/2} - (1-r)^2}{2r^2T}$$

$$R = r + \frac{(1-r)^2 r\tau^2}{1-r^2\tau^2}$$

Example:

T = 0.86156

n = 1.526

$$r = \left(\frac{1.526-1}{1.526+1}\right)^2$$

$$\tau = 0.93974$$

$$R = 0.07846$$

Material:WindowGas

This object specifies the properties of the gas between the panes of a multi-pane window. Gas Type = Custom allows you to specify the properties of gases other than air, Argon, Krypton or Xenon. There is an EnergyPlus Reference Data Set for Material:WindowGas that contains several types of gas of different thicknesses. See Material:WindowGasMixture for the case that the gas fill is a mixture of different gases.

Field: Name

The name of the gas fill. It refers to a layer in a window construction.

Field: Gas Type

The type of gas. The choices are Air, Argon, Krypton, or Xenon. If Gas Type = Custom you can use Conductivity Coefficient A, etc. to specify the properties of a different type of gas.

Field: Thickness

The thickness (m) of the gas layer.

The following entries are used only if Gas Type = Custom. The A and B coefficients are those in the following expression that gives a property value as a function of temperature in degrees K:

Property = Coefficient_A + Coefficient_B * T(K)

Field: Conductivity Coefficient A

The A coefficient for gas conductivity (W/m-K). Used only if Gas Type = Custom.

Field: Conductivity Coefficient B

The B coefficient for gas conductivity (W/m-K^2). Used only if Gas Type = Custom.

Field: Viscosity Coefficient A

The A coefficient for gas viscosity (kg/m-s). Used only if Gas Type = Custom.

Field: Viscosity Coefficient B

The B coefficient for gas viscosity (kg/m-s-K). Used only if Gas Type = Custom.

Field: Specific Heat Coefficient A

The A coefficient for gas specific heat (J/kg-K). Used only if Gas Type = Custom.

Field: Specific Heat Coefficient B

The B coefficient for gas specific heat (J/kg-K^2). Used only if Gas Type = Custom.

```
MATERIAL:WINDOWGAS,
    \memo Gas material properties that are used in Windows or Glass Doors
       \min-fields 3
  A1 , \field Name
       \required-field
       \type alpha
       \reference MaterialName
  A2 , \field Gas Type
       \required-field
       \type choice
       \key Air
       \key Argon
       \key Krypton
       \key Xenon
       \key Custom
  N1 , \field Thickness
       \required-field
       \units m
       \type real
       \minimum> 0.0
  N2 , \field Conductivity Coefficient A
       \units W/m-K
       \type real
       \note Used only if Gas Type = Custom
       \minimum> 0.0
  N3 , \field Conductivity Coefficient B
       \units W/m-K2
       \type real
       \note Used only if Gas Type = Custom
  N4 , \field Viscosity Coefficient A
       \units g/m-s
       \type real
       \note Used only if Gas Type = Custom
       \minimum> 0.0
  N5 , \field Viscosity Coefficient B
       \units g/m-s-K
       \type real
       \note Used only if Gas Type = Custom
  N6 , \field Specific Heat Coefficient A
       \units J/kg-K
       \type real
       \note Used only if Gas Type = Custom
       \minimum> 0.0
  N7 , \field Specific Heat Coefficient B
       \units J/kg-K2
       \type real
       \note Used only if Gas Type = Custom
  N8 ; \field Molecular Weight
       \type real
       \note Used only if Gas Type = Custom
       \minimum 20.0
       \maximum 200.0
```

An IDF example:

```
MATERIAL:WINDOWGAS,AIRGAP,
  AIR,      ! Gas type (Air - Argon - Krypton - Xenon - Custom)]
  0.0125;   ! Thickness {m} 1/2 inch
```

Material:WindowGasMixture

This object allows you to specify the fill between the panes of a multi-pane window to be a mixture of two, three or four different gases chosen from air, argon, krypton and xenon. It can also be used if only one type of gas in the fill. In this case you can also use Material:WindowGas. Note that the fractions of gas types in the mixture should add up to 1.0.

Field: Name

The name of the gas mixture. It refers to a layer in a window construction.

Field: Thickness

The thickness (m) of the gas mixture layer.

Field: Number of Gases in Mixture

The number of different types of gas in the mixture (a value from 1 to 4)

Field: Gas Type – Gas #1

The type of the first gas in the mixture. Choices are Air, Argon, Krypton and Xenon.

Field: Fraction – Gas #1

The fraction of the first gas in the mixture.

Field: Gas Type – Gas #2

The type of the second gas in the mixture. Choices are Air, Argon, Krypton and Xenon.

Field: Fraction – Gas #2

The fraction of the second gas in the mixture.

Field: Gas Type – Gas #3

The type of the third gas in the mixture. Choices are Air, Argon, Krypton and Xenon.

Field: Fraction – Gas #3

The fraction of the third gas in the mixture.

Field: Gas Type – Gas #4

The type of the fourth gas in the mixture. Choices are Air, Argon, Krypton and Xenon.

Field: Fraction – Gas #4

The fraction of the fourth gas in the mixture.

```
MATERIAL:WINDOWGASMIXTURE,
       \memo Gas mixtures that are used in Windows or Glass Doors
       \min-fields 7
  A1 , \field Name
       \required-field
       \type alpha
       \reference MaterialName
  N1 , \field Thickness
       \required-field
       \units m
       \type real
       \minimum> 0.0
  N2 , \field Number of gases in mixture
       \required-field
       \type integer
       \minimum 1
       \maximum 4
  A2 , \field Gas Type - Gas #1
       \required-field
       \type choice
       \key Air
       \key Argon
       \key Krypton
       \key Xenon
  N3 , \field Fraction - Gas #1
       \required-field
       \type real
       \minimum> 0.0
       \maximum 1.0
  A3 , \field Gas Type - Gas #2
       \required-field
       \type choice
       \key Air
       \key Argon
       \key Krypton
       \key Xenon
  N4 , \field Fraction - Gas #2
       \required-field
       \type real
       \minimum> 0.0
       \maximum 1.0
  A4 , \field Gas Type - Gas #3
       \type choice
       \key Air
       \key Argon
       \key Krypton
       \key Xenon
  N5 , \field Fraction - Gas #3
       \type real
       \minimum> 0.0
       \maximum 1.0
  A5 , \field Gas Type - Gas #4
       \type choice
       \key Air
       \key Argon
       \key Krypton
       \key Xenon
  N6 ; \field Fraction - Gas #4
       \type real
       \minimum> 0.0
       \maximum 1.0
```

An IDF example:

```
MATERIAL:WINDOWGASMIXTURE,ArgonKryptonMix,
0.0125,   ! Thickness {m} 1/2 inch
2,        ! Number of Gases in Mixture
Argon,    ! Gas Type - Gas #1
0.6,      ! Fraction - Gas #1
Krypton,  ! Gas Type - Gas #2
0.4;      ! Fraction - Gas #2
```

Material:WindowShade

This object specifies the properties of window shade materials. Reflectance and emissivity properties are assumed to be the same on both sides of the shade. Shades are considered to be perfect diffusers (all transmitted and reflected radiation is hemispherically diffuse) with transmittance and reflectance independent of angle of incidence. There is an EnergyPlus Reference Data Set for Material:WindowShade that contains properties of generic window shades.

Window shades can be on the inside of the window ("interior shades") or on the outside of the window ("exterior shades"). Between-glass shades are not currently modeled. When in place, the shade is assumed to cover all of the glazed part of the window, including dividers; it does not cover any of the window frame, if present. The plane of the shade is assumed to be parallel to the glazing.

Material:WindowShade can be used for diffusing materials such as drapery and translucent roller shades. For slat-type shading devices, like Venetian blinds, that have a strong angular dependence of transmission, absorption and reflection, it is better to use Material:WindowBlind.

Transmittance and reflectance values for drapery material with different color and openness of weave can be obtained from manufacturers or determined from 2001 ASHRAE Fundamentals, Chapter 30, Fig. 31.

Window shades can be controlled using the WindowShadingControl object.

Field: Name

Name of the shade. It is referenced as an inside or outside layer in a window construction.

Field: Solar Transmittance

Transmittance averaged over the solar spectrum. Assumed independent of incidence angle.

Field: Solar Reflectance

Reflectance averaged over the solar spectrum. Assumed same on both sides of shade and independent of incidence angle.

Field: Visible Transmittance

Transmittance averaged over the solar spectrum and weighted by the response of the human eye. Assumed independent of incidence angle.

Field: Visible Reflectance

Reflectance averaged over the solar spectrum and weighted by the response of the human eye. Assumed same on both side of shade and independent of incidence angle.

Field: Thermal hemispherical emissivity

Effective long-wave emissivity. Assumed same on both sides of shade. We can approximate this effective emissivity, ε_{eff}, as follows. Let η be the "openness" the shade, i.e., the ratio of

the area of openings in the shade to the overall shade area (see Field: Air-Flow Permeability, below). Let the emissivity of the shade material be ε. Then

$$\varepsilon_{\text{eff}} \approx \varepsilon\left(1-\eta\right)$$

For most non-metallic materials ε is about 0.9.

Field: Thermal Transmittance

Effective long-wave transmittance. Assumed independent of incidence angle. We can approximate this effective long-wave transmittance, τ_{eff}, as follows. Let η be the "openness" the shade, i.e., the ratio of the area of openings in the shade to the overall shade area. Let the long-wave transmittance of the shade material be τ. Then

$$T_{\text{eff}} \approx \eta + T\left(1-\eta\right)$$

For most materials τ is very close to zero, which gives

$$T_{\text{eff}} \approx \eta$$

Field: Thickness

Thickness of the shade material (m). If the shade is not flat, such as for pleated pull-down shades or folded drapery, the average thickness normal to the plane of the shade should be used.

Field: Conductivity

Shade material conductivity (W/m-K).

Field: Shade-to-Glass Distance

Distance from shade to adjacent glass (m). This is denoted by *s* in Figure 5 and Figure 6, below. If the shade is not flat, such as for pleated pull-down shades or folded drapery, the average shade-to-glass distance should be used. (The shade-to-glass distance is used in calculating the natural convective air flow between glass and shade produced by buoyancy effects.)

In the following, *H* is the glazing height and *W* is the glazing width.

Field: Top Opening Multiplier

Effective area for air flow at the top of the shade divided by *sW*, the horizontal area between glass and shade (see Figures below).

Field: Bottom Opening Multiplier

Effective area for air flow at the bottom of the shade divided by *sW*, the horizontal area between glass and shade (see Figures below).

Field: Left-Side Opening Multiplier

Effective area for air flow at the left side of the shade divided by *sH*, the vertical area between glass and shade (see Figures below).

Field: Right-Side Opening Multiplier

Effective area for air flow at the right side of the shade divided by *sH*, the vertical area between glass and shade (see Figures below).

Field: Field: Air-Flow Permeability

The fraction of the shade surface that is open to air flow, i.e., the total area of openings ("holes") in the shade surface divided by the shade area, *HW*. If air cannot pass through the shade material, Air-Flow Permeability = 0. For drapery fabric and screens the Air-Flow Permeability can be taken as the "openness" of the fabric (see 2001 ASHRAE Fundamentals, Chapter 30, Fig. 31), which is 0.0 to 0.07 for closed weave, 0.07 to 0.25 for semi-open weave, and 0.25 and higher for open weave.

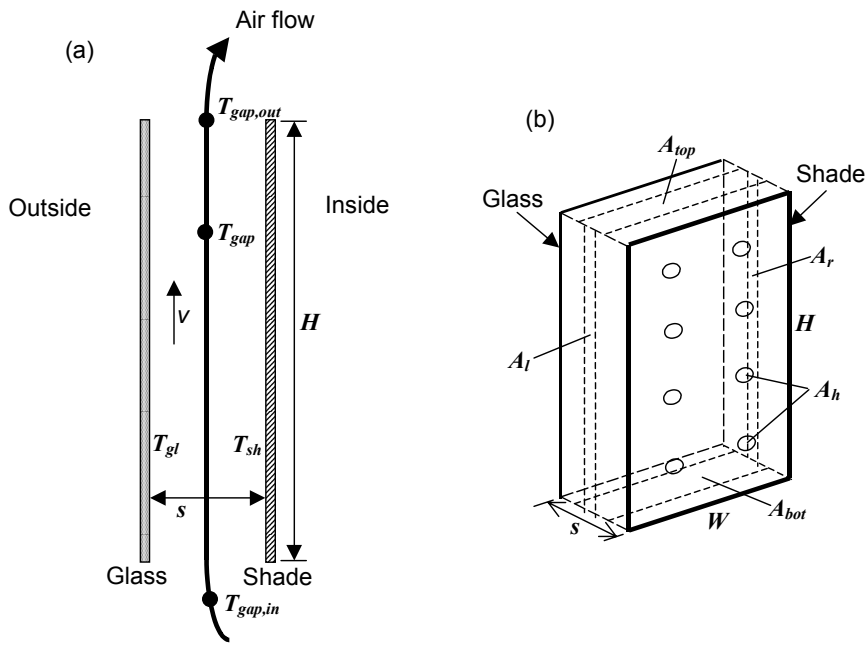

Figure 5. Vertical section (a) and perspective view (b) of glass and interior shade layers showing variables used in the gap air flow analysis. In (b), the air-flow opening areas A_{bot}, A_{top}, A_l, A_r and A_h are shown schematically. See *Engineering Manual* for definition of thermal variables.

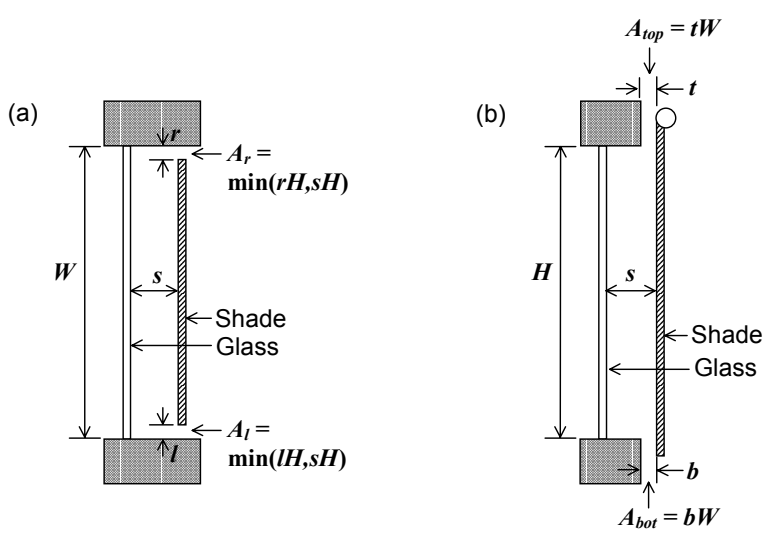

Figure 6. Examples of air-flow openings for an interior shade covering glass of height *H* and width *W*. Not to scale. (a) Horizontal section through shade with openings on the left and right sides (top view). (b) Vertical section through shade with openings at the top and bottom (side view). In (a) Left-Side Opening

Multiplier = A_l/sH = min(l/s,1) and Right-Side Opening Multiplier = A_r/sH = min(r/s,1). In (b) Top Opening Multiplier = $A_{top}/sW = t/s$ and Bottom Opening Multiplier = $A_{bot}/sW = b/s$.

```
MATERIAL:WINDOWSHADE,
  \min-fields 15
  A1 , \field Name
       \required-field
       \type alpha
       \reference MaterialName
  N1 , \field Solar transmittance
       \required-field
       \note Assumed independent of incidence angle
       \type real
       \minimum 0
       \maximum< 1
  N2 , \field Solar Reflectance
       \required-field
       \note Assumed same for both sides
       \note Assumed independent of incidence angle
       \type real
       \minimum 0
       \maximum< 1
  N3 , \field Visible transmittance
       \required-field
       \note Assumed independent of incidence angle
       \type real
       \minimum 0
       \maximum< 1
  N4 , \field Visible reflectance
       \required-field
       \note Assumed same for both sides
       \note Assumed independent of incidence angle
       \type real
       \minimum 0
       \maximum< 1
  N5 , \field Thermal hemispherical emissivity
       \required-field
       \type real
       \maximum< 1
       \minimum> 0
  N6 , \field Thermal transmittance
       \required-field
       \type real
       \maximum< 1
       \minimum 0
```

```
  N7 , \field Thickness
       \required-field
       \type real
       \units m
       \minimum> 0
  N8 , \field Conductivity
       \required-field
       \units W/m-K
       \type real
       \minimum> 0
  N9 , \field Shade-to-glass distance
       \type real
       \units m
       \minimum 0.001
       \maximum 0.30
       \default 0.050
  N10, \field Top opening multiplier
       \type real
       \minimum 0.0
       \maximum 1.0
       \default 0.5
  N11, \field Bottom opening multiplier
       \type real
       \minimum 0.0
       \maximum 1.0
       \default 0.5
  N12, \field Left-side opening multiplier
       \type real
       \minimum 0.0
       \maximum 1.0
       \default 0.5
  N13, \field Right-side opening multiplier
       \type real
       \minimum 0.0
       \maximum 1.0
       \default 0.5
  N14; \field Air flow permeability
       \type real
       \minimum 0.0
       \maximum 0.8
       \default 0.0
```

An IDF example:

```
MATERIAL:Shade ,
  FLAT DRAPES - CLOSE WEAVE MEDIUM COLOR, ! Name
  0.15         ,   ! Solar transmittance
  0.35         ,   ! Solar reflectance
  0.15         ,   ! Visible transmittance
  0.35         ,   ! Visible reflectance
  0.87         ,   ! Long-wave emissivity
  0.03         ,   ! Long-wave transmittance
  0.004        ,   ! Thickness
  0.05         ,   ! Conductivity
  0.05         ,   ! Shade-to-glass distance
  0.5          ,   ! Top opening multiplier
  0.5          ,   ! Bottom opening multiplier
  0.0          ,   ! Left-side opening multiplier
  0.0          ,   ! Right-side opening multiplier
  0.03         ;   ! Air-flow permeability
```

Material:WindowBlind

This object specifies the properties of a window blind consisting of flat, equally-spaced slats. Unlike window shades, which are modeled as perfect diffusers, window blinds have solar and visible transmission and reflection properties that strongly depend on slat angle and angle of

incidence of solar radiation. There is an EnergyPlus Reference Data Set for Material:WindowBlind that contains properties of generic window blinds.

Window blinds can be on the inside of the window ("interior blinds") or on the outside of the window ("exterior blinds"). Between-glass blinds are not currently modeled. When in place, the blind is assumed to cover all of the glazed part of the window, including dividers; it does not cover any of the window frame, if present. The plane of the blind is assumed to be parallel to the glazing. When the blind is retracted it is assumed to cover none of the window. The solar and thermal effects of the blind's support strings and/or tapes are ignored.

The WindowShadingControl object can be used to control when the blind is deployed. It can also be used to control slat angle.

Field: Name

Name of the blind. It is referenced as an inside or outside layer in a window construction.

Field: Slat Orientation

The choices are Horizontal and Vertical. "Horizontal" means the slats are parallel to the bottom (and top) of the window; this is the same as saying that the slats are parallel to the X-axis of the window. "Vertical" means the slats are parallel to the sides of the window.

Field: Slat Width

The width of the slat measured from edge to edge (m). See Figure 7.

Field: Slat Separation

The distance between the front of a slat and the back of the adjacent slat (m). See Figure 7.

Field: Slat Thickness

The distance between the faces of a slat (m). See Figure 7, below.

Field: Slat Angle

The angle (degrees) between the glazing outward normal and the slat outward normal, where the outward normal points away from the front face of the slat (degrees). See Figure 7, below.

If the WindowShadingControl for the blind has Type of Slat Angle Control for Blinds = FixedSlatAngle, the slat angle is fixed at "Slat Angle."

If Type of Slat Angle Control for Blinds = BlockBeamSolar, the slat angle is varied to block beam solar radiation and the value of "Slat Angle" is used only when the blind is in place and there is no beam solar radiation incident on the blind.

If Type of Slat Angle Control for Blinds = ScheduledSlatAngle, the slat angle is variable and "Slat Angle" is not applicable and the field should be blank.

If Type of Slat Angle Control for Blinds = FixedSlatAngle and "Slat Angle" is less than the minimum or greater than the maximum allowed by Slat Width, Slat Separation and Slat Thickness, the slat angle will be reset to the corresponding minimum or maximum and a warning will be issued.

Field: Slat Conductivity

The thermal conductivity of the slat (W/m-K).

Field: Slat Beam Solar Transmittance at Normal Incidence

The beam solar transmittance of the slat at normal incidence. Any transmitted beam radiation is assumed to be 100% diffuse (i.e., slats are translucent). Transmittance is assumed to have the same value at other angles of incidence.

Field: Slat Beam Solar Reflectance at Normal Incidence, Front Side

The beam solar reflectance at normal incidence on the front side of the slat. Assumed to have the same value at other angles of incidence (matte finish). This means that slats with a large specularly-reflective component (shiny slats) are not well modeled.

Field: Slat Beam Solar Reflectance at Normal Incidence, Back Side

The beam solar reflectance at normal incidence on the back side of the slat. Assumed to have the same value at other angles of incidence (matte finish). This means that slats with a large specularly-reflective component (shiny slats) are not well modeled.

Field: Slat Diffuse Solar Transmittance

The slat transmittance for diffuse solar radiation.

Field: Slat Diffuse Solar Reflectance, Front Side

The front-side slat reflectance for diffuse solar radiation.

Field: Slat Diffuse Solar Reflectance, Back Side

The back-side slat reflectance for diffuse solar radiation.

Field: Slat Beam Visible Transmittance at Normal Incidence

The beam visible transmittance of the slat at normal incidence. Any transmitted visible radiation is assumed to be 100% diffuse (i.e., slats are translucent). Transmittance is assumed to have the same value at other angles of incidence.

Field: Slat Beam Visible Reflectance at Normal Incidence, Front Side

The beam visible reflectance at normal incidence on the front side of the slat. Assumed to have the same value at other angles of incidence (matte finish). This means that slats with a large specularly-reflective component (shiny slats) are not well modeled.

Field: Slat Beam Visible Reflectance at Normal Incidence, Back Side

The beam visible reflectance at normal incidence on the back side of the slat. Assumed to have the same value at other angles of incidence (matte finish). This means that slats with a large specularly-reflective component (shiny slats) are not well modeled.

Field: Slat Diffuse Visible Transmittance

The slat transmittance for diffuse visible radiation.

Field: Slat Diffuse Visible Reflectance, Front Side

The front-side slat reflectance for diffuse visible radiation.

Field: Slat Diffuse Visible Reflectance, Back Side

The back-side slat reflectance for diffuse visible radiation.

Field: Slat IR (thermal) Hemispherical Transmittance

The slat IR transmittance. It is zero for solid metallic, wooden or glass slats, but may be non-zero for thin plastic slats.

Field: Slat IR (thermal) Hemispherical Emissivity, Front Side

Front-side emissivity of the slat.

Field: Slat IR (thermal) Hemispherical Emissivity, Back Side

Back-side emissivity of the slat. Approximately 0.9 for most materials. The most common exception is bare (unpainted) metal slats or slats finished with a metallic paint.

Field: Blind-to-Glass Distance

Distance from the mid-plane of the blind to the adjacent glass (m). See Figure 7. As for window shades (ref: Material:WindowShade) this distance is used in calculating the natural convective air flow between glass and blind produced by buoyancy effects.)

The following opening multipliers are defined in the same way as for window shades (see Material:WindowShade, Figure 5 and Figure 6). Note that, unlike window shades, there is no input for Air-Flow Permeability; this is automatically calculated by the program from slat angle, width and separation.

Field: Blind Top Opening Multiplier

Defined as for Material:WindowShade.

Field: Blind Bottom Opening Multiplier

Defined as for Material:WindowShade.

Field: Blind Left-Side Opening Multiplier

Defined as for Material:WindowShade.

Field: Blind Right-Side Opening Multiplier

Defined as for Material:WindowShade.

Field: Minimum Slat Angle

The minimum allowed slat angle (degrees). Used only if WindowShadingControl for the window that incorporates this blind varies the slat angle (i.e., the WindowShadingControl has Type of Slat Angle Control for Blinds = ScheduledSlatAngle or BlockBeamSolar). In this case, if the program tries to select a slat angle less than Minimum Slat Angle it will be reset to Minimum Slat Angle. (Note that if the Minimum Slat Angle itself is less than the minimum allowed by Slat Width, Slat Separation and Slat Thickness, it will be reset to that minimum.)

Field: Maximum Slat Angle

The maximum allowed slat angle (degrees). Used only if WindowShadingControl for the window that incorporates this blind varies the slat angle (i.e., the WindowShadingControl has Type of Slat Angle Control for Blinds = ScheduledSlatAngle or BlockBeamSolar). In this case, if the program tries to select a slat angle greater than Maximum Slat Angle the slat angle will be reset to Maximum Slat Angle. (Note that if the Maximum Slat Angle itself is greater than the maximum allowed by Slat Width, Slat Separation and Slat Thickness, it will be reset to that maximum.)

```
MATERIAL:WINDOWBLIND,
     \min-fields 27
  A1 , \field Name
       \required-field
       \type alpha
       \reference MaterialName
  A2 , \field Slat orientation
       \type choice
        \key Horizontal
        \key Vertical
       \reference MaterialName
       \default Horizontal
  N1 , \field Slat width
       \required-field
       \units m
       \type real
       \minimum> 0
       \maximum 1
  N2 , \field Slat separation
       \required-field
       \note Distance between adjacent slat faces
       \units m
       \type real
       \minimum> 0
       \maximum 1
  N3 , \field Slat thickness
       \note Distance between top and bottom surfaces of slat
       \note Slat is assumed to be rectangular in cross section and flat
       \type real
       \units m
       \minimum> 0
       \maximum 0.1
       \default 0.00025
  N4 , \field Slat angle
       \required-field
       \type real
       \units deg
       \minimum 0
       \maximum 180
  N5 , \field Slat conductivity
       \type real
       \units W/m-K
       \minimum> 0
       \default 221.0
       \note default is for aluminum
  N6 , \field Slat beam solar transmittance at normal incidence
       \type real
       \maximum< 1
       \minimum 0
       \default 0
  N7 , \field Slat beam solar reflectance at normal incidence, front side
       \required-field
       \type real
       \maximum< 1
       \minimum 0
  N8 , \field Slat beam solar reflectance at normal incidence, back side
       \required-field
       \type real
       \maximum< 1
       \minimum 0
  N9 , \field Slat diffuse solar transmittance
       \type real
       \maximum< 1
       \minimum 0
       \default 0
  N10, \field Slat diffuse solar reflectance, front side
       \required-field
       \type real
       \maximum< 1
       \minimum 0
```

```
N11, \field Slat diffuse solar reflectance, back side
     \required-field
     \type real
     \maximum< 1
     \minimum 0
N12, \field Slat beam visible transmittance at normal incidence
     \type real
     \maximum< 1
     \minimum 0
     \required-field
N13, \field Slat beam visible reflectance at normal incidence, front side
     \note Required for daylighting calculation
     \type real
     \maximum< 1
     \minimum 0
N14, \field Slat beam visible reflectance at normal incidence, back side
     \note Required for daylighting calculation
     \type real
     \maximum< 1
     \minimum 0
N15, \field Slat diffuse visible transmittance
     \note Used only for daylighting calculation
     \type real
     \maximum< 1
     \minimum 0
     \default 0
N16, \field Slat diffuse visible reflectance, front side
     \note Required for daylighting calculation
     \type real
     \maximum< 1
     \minimum 0
N17, \field Slat diffuse visible reflectance, back side
     \note Required for daylighting calculation
     \type real
     \maximum< 1
     \minimum 0
N18, \field Slat IR (thermal) hemispherical transmittance
     \type real
     \maximum< 1
     \minimum 0
     \default 0
N19, \field Slat IR (thermal) hemispherical emissivity, front side
     \type real
     \maximum< 1
     \minimum 0
     \default 0.9
N20, \field Slat IR (thermal) hemispherical emissivity, back side
     \type real
     \maximum< 1
     \minimum 0
     \default 0.9
N21, \field Blind-to-glass distance
     \type real
     \units m
     \minimum 0.01
     \maximum 0.30
     \default 0.050
N22, \field Blind top opening multiplier
     \type real
     \minimum 0.0
     \maximum 1.0
     \default 0.5
N23, \field Blind bottom opening multiplier
     \type real
     \minimum 0.0
     \maximum 1.0
     \default 0.0
```

```
  N24, \field Blind left-side opening multiplier
       \type real
       \minimum 0.0
       \maximum 1.0
       \default 0.5
  N25, \field Blind right-side opening multiplier
       \type real
       \minimum 0.0
       \maximum 1.0
       \default 0.5
  N26, \field Minimum Slat Angle
       \note Used only if WindowShadingControl for the window that incorporates
      \note this blind varies the slat angle (i.e., WindowShadingControl with
      \note Type of Slat Angle Control for Blinds = ScheduledSlatAngle
      \note or BlockBeamSolar)
       \type real
       \units deg
       \default 0
      \minimum 0
       \maximum 180
  N27; \field Maximum Slat Angle
       \note Used only if WindowShadingControl for the window that incorporates
      \note this blind varies the slat angle (i.e., WindowShadingControl with
      \note Type of Slat Angle Control for Blinds = ScheduledSlatAngle
      \note or BlockBeamSolar)
       \type real
       \units deg
       \default 180
      \minimum 0
       \maximum 180
```

An IDF example:

```
MATERIAL:WindowBlind,
 White Painted Metal Blind,   !- Name
 HORIZONTAL, !- Slat orientation
 0.025   , !- Slat width (m)
 0.01875 , !- Slat separation (m)
 0.001   , !- Slat thickness (m)
 45.0    , !- Slat angle (deg)
 44.9    , !- Slat conductivity (W/m-K)
 0.0     , !- Slat beam solar transmittance
 0.8     , !- Slat beam solar reflectance, front side
 0.8     , !- Slat beam solar reflectance, back side
 0.0     , !- Slat diffuse solar transmittance
 0.8     , !- Slat diffuse solar reflectance, front side
 0.8     , !- Slat diffuse solar reflectance, back side
 0.0     , !- Slat beam visible transmittance
 0.5     , !- Slat beam visible reflectance, front side
 0.5     , !- Slat beam visible reflectance, back side
 0.0     , !- Slat diffuse visible transmittance
 0.8     , !- Slat diffuse visible reflectance, front side
 0.8     , !- Slat diffuse visible reflectance, back side
 0.0     , !- Slat IR (thermal) hemispherical transmittance
 0.9     , !- Slat IR (thermal) hemispherical emissivity, front side
 0.9     , !- Slat IR (thermal) hemispherical emissivity, back side
 0.050   , !- Blind-to-glass distance
 0.0     , !- Blind top opening multiplier
 0.0     , !- Blind bottom opening multiplier
 0.5     , !- Blind left-side opening multiplier
 0.5     , !- Blind right-side opening multiplier
 ,         !- Minimum slat angle (deg)
 ;         !- Maximum slat angle (deg)
```

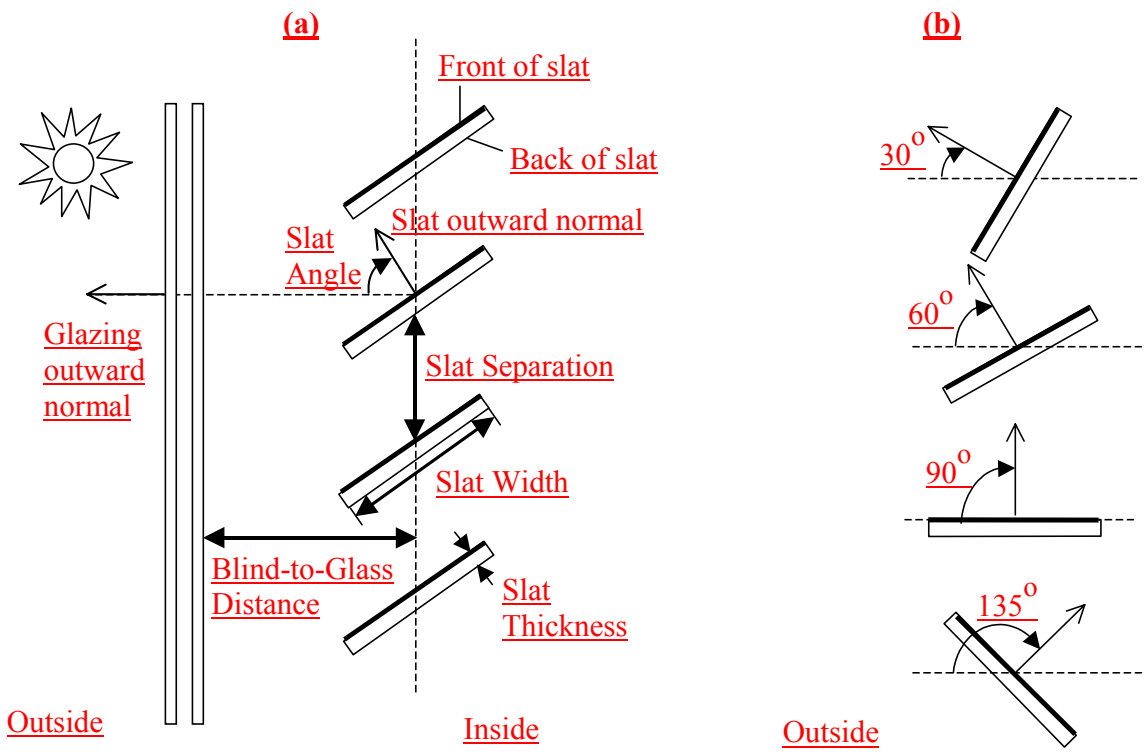

Figure 7. (a) Side view of a window blind with horizontal slats (or top view of blind with vertical slats) showing slat geometry. The front face of a slat is shown by a heavy line. The slat angle is defined as the angle between the glazing outward normal and the slat outward normal, where the outward normal points away from the front face of the slat. (b) Slat orientations for representative slat angles. The slat angle varies from 0°, when the front of the slat is parallel to the glazing and faces toward the outdoors, to 90°, when the slat is perpendicular to the glazing, to 180°, when the front of the slat is parallel to the glazing and faces toward the indoors. The minimum and maximum slat angles are determined by the slat thickness, width and separation.

WindowGlassSpectralData

With the WindowGlassSpectralData object, you can specify the wavelength-by-wavelength transmittance and reflectance properties of a glass material. To determine the overall optical properties of a glazing system (solar and visible transmittance and solar absorptance vs. angle of incidence) EnergyPlus first calculates transmittance and absorptance vs. angle of incidence for each wavelength. This is then weighted by a standard solar spectrum to get the solar transmittance and absorptance vs. angle of incidence (for use in the solar heat gain calculations), and further weighted by the response of the human eye to get the visible transmittance vs. angle of incidence (for use in the daylighting calculation).

WindowGlassSpectralData should be used for multi-pane windows when one or more of the glass layers is *spectrally selective*, i.e., the transmittance depends strongly on wavelength. An example is glass with a coating that gives high transmittance in the daylight part of the solar spectrum (roughly 0.4 to 0.7 microns) and low transmittance at longer wavelengths, thus providing better solar heat gain control than uncoated glass. If spectral data is not used in case, the overall optical properties of the glazing system that EnergyPlus calculates will not be correct.

You can input up to 450 sets of values for wavelengths covering the solar spectrum. Each set consists of

{wavelength (microns), transmittance, front reflectance, back reflectance}

Spectral data of this kind are routinely measured by glass manufacturers. Data sets for over 800 commercially available products are contained in an Optical Data Library maintained by the Windows Group at Lawrence Berkeley National Laboratory. This library can be downloaded from http://windows.lbl.gov/. You will have to edit entries from this library to put them in the format required by the EnergyPlus WindowGlassSpectralData object.

An alternative to using the WindowGlassSpectralData object is to run the WINDOW 5 window analysis program. This program has built-in access to the Optical Data Library and let's you easily create customized, multi-layer glazing systems that can be exported for use in EnergyPlus. For more details, see "Importing Windows from WINDOW 5."

Field: Name

The name of the spectral data set. It is referenced by Material:WindowGlass when Optical Data Type = Spectral.

Fields 1-4 (repeated up to 450 times)

Sets of values for wavelengths covering the solar spectrum (from about 0.25 to 2.5 microns [10^{-6} m]). Each set consists of

{wavelength (microns), transmittance, front reflectance, back reflectance}

The wavelength values must be in ascending order. The transmittance and reflectance values are at normal incidence. "Front reflectance" is the reflectance for radiation striking the glass from the outside, i.e., from the side opposite the zone in which the window is defined. "Back reflectance" is the reflectance for radiation striking the glass from the inside, i.e., from the zone in which the window is defined. Therefore, for exterior windows, "front" is the side closest to the outdoors and "back" is the side closest to the zone in which the window is defined. For interior windows, "front" is the side closest to the adjacent zone and "back" is the side closest to the zone in which the window is defined.

```
WindowGlassSpectralData,
       \memo Name is followed by up to 450 sets of normal-incidence measured values of
       \memo [wavelength, transmittance, front reflectance, back reflectance] for wavelengths
       \memo covering the solar spectrum (from about 0.25 to 2.5 microns)
  A1,  \field Name
  N1,N2,N3,N4,      N5,N6,N7,N8,     N9,N10,N11,N12,  N13,N14,N15,N16, N17,N18,N19,N20,
  N21,N22,N23,N24,  N25,N26,N27,N28, N29,N30,N31,N32, N33,N34,N35,N36, N37,N38,N39,N40,
  N41,N42,N43,N44,  N45,N46,N47,N48, N49,N50,N51,N52, N53,N54,N55,N56, N57,N58,N59,N60,
  N61,N62,N63,N64,  N65,N66,N67,N68, N69,N70,N71,N72, N73,N74,N75,N76, N77,N78,N79,N80,
  N81,N82,N83,N84,  N85,N86,N87,N88, N89,N90,N91,N92, N93,N94,N95,N96, N97,N98,N99,N100,
   .
   .
   .
  N1701,N1702,N1703,N1704, N1705,N1706,N1707,N1708, N1709,N1710,N1711,N1712,N1713,N1714,N1715,N1716,
  N1717,N1718,N1719,N1720, N1721,N1722,N1723,N1724, N1725,N1726,N1727,N1728, N1729,N1730,N1731,N1732,
  N1733,N1734,N1735,N1736, N1737,N1738,N1739,N1740, N1741,N1742,N1743,N1744, N1745,N1746,N1747,N1748,
  N1749,N1750,N1751,N1752, N1753,N1754,N1755,N1756, N1757,N1758,N1759,N1760, N1761,N1762,N1763,N1764,
  N1765,N1766,N1767,N1768, N1769,N1770,N1771,N1772, N1773,N1774,N1775,N1776, N1777,N1778,N1779,N1780,
  N1781,N1782,N1783,N1784, N1785,N1786,N1787,N1788, N1789,N1790,N1791,N1792, N1793,N1794,N1795,N1796,
  N1797,N1798,N1799,N1800;
```

An IDF example:

```
WindowGlassSpectralData,
      TestSpectralDataSet,
       ! { from WINDOW 4 library }
       ! { actual 9.91mm clear laminate: 15_mil PVB, ID:37966/50032-39-9 } 10.38
       ! { conductivity PVB adjusted, W/M/K  } 0.798
       ! { thermal IR transmittance, assumed } tir=0.00
       ! { thermal IR hemispherical emittance, assumed } emis= 0.84 0.84

       ! WL   T     Rfront Rback
       .300, 0.000, 0.045, 0.045,
       .310, 0.000, 0.044, 0.044,
       .320, 0.000, 0.044, 0.044,
       .330, 0.000, 0.042, 0.042,
       .340, 0.000, 0.041, 0.041,
       .350, 0.000, 0.040, 0.040,
       .360, 0.009, 0.040, 0.040,
       .370, 0.120, 0.040, 0.040,
       .380, 0.492, 0.051, 0.051,
       .390, 0.782, 0.070, 0.070,
       .400, 0.856, 0.075, 0.075,
       .410, 0.858, 0.075, 0.075,
       .420, 0.858, 0.075, 0.075,
       .430, 0.860, 0.075, 0.075,
       .440, 0.861, 0.075, 0.075,
       .450, 0.871, 0.075, 0.075,
       .460, 0.880, 0.076, 0.076,
       .470, 0.883, 0.075, 0.075,
       .480, 0.887, 0.076, 0.076,
       .490, 0.890, 0.075, 0.075,
       .500, 0.890, 0.075, 0.075,
       .510, 0.891, 0.075, 0.075,
       .520, 0.887, 0.075, 0.075,
       .530, 0.890, 0.075, 0.075,
       .540, 0.883, 0.074, 0.074,
       .550, 0.888, 0.074, 0.074,
       .560, 0.882, 0.074, 0.074,
       .570, 0.881, 0.074, 0.074,
       .580, 0.865, 0.071, 0.071,
       .590, 0.858, 0.070, 0.070,
```

```
     .600, 0.865, 0.070, 0.070,
     .610, 0.856, 0.070, 0.070,
     .620, 0.845, 0.070, 0.070,
     .630, 0.837, 0.070, 0.070,
     .640, 0.827, 0.069, 0.069,
     .650, 0.820, 0.067, 0.067,
     .660, 0.807, 0.067, 0.067,
     .670, 0.798, 0.065, 0.065,
     .680, 0.791, 0.065, 0.065,
     .690, 0.781, 0.065, 0.065,
     .700, 0.768, 0.064, 0.064,
     .710, 0.761, 0.064, 0.064,
     .720, 0.744, 0.062, 0.062,
     .730, 0.713, 0.064, 0.064,
     .740, 0.703, 0.062, 0.062,
     .750, 0.694, 0.061, 0.061,
     .760, 0.685, 0.061, 0.061,
     .770, 0.675, 0.060, 0.060,
     .780, 0.667, 0.060, 0.060,
     .790, 0.655, 0.060, 0.060,
     .800, 0.646, 0.059, 0.059,
     .810, 0.638, 0.059, 0.059,
     .820, 0.629, 0.057, 0.057,
     .830, 0.623, 0.057, 0.057,
     .840, 0.614, 0.056, 0.056,
     .850, 0.608, 0.056, 0.056,
     .860, 0.601, 0.055, 0.055,
     .870, 0.597, 0.054, 0.054,
     .880, 0.592, 0.054, 0.054,
     .890, 0.587, 0.054, 0.054,
     .900, 0.582, 0.055, 0.055,
     .950, 0.568, 0.051, 0.051,
    1.000, 0.562, 0.051, 0.051,
    1.050, 0.556, 0.050, 0.050,
    1.100, 0.563, 0.051, 0.051,
    1.150, 0.556, 0.050, 0.050,
    1.200, 0.547, 0.050, 0.050,
    1.250, 0.577, 0.051, 0.051,
    1.300, 0.598, 0.054, 0.054,
    1.350, 0.608, 0.055, 0.055,
    1.400, 0.603, 0.052, 0.052,
    1.450, 0.614, 0.055, 0.055,
    1.500, 0.648, 0.057, 0.057,
    1.550, 0.680, 0.059, 0.059,
    1.600, 0.699, 0.060, 0.060,
    1.650, 0.706, 0.060, 0.060,
    1.700, 0.570, 0.051, 0.051,
    1.750, 0.585, 0.051, 0.051,
    1.800, 0.637, 0.055, 0.055,
    1.850, 0.655, 0.057, 0.057,
    1.900, 0.637, 0.057, 0.057,
    1.950, 0.634, 0.057, 0.057,
    2.000, 0.634, 0.057, 0.057,
    2.050, 0.586, 0.052, 0.052,
    2.100, 0.588, 0.054, 0.054,
    2.150, 0.597, 0.054, 0.054,
    2.200, 0.576, 0.051, 0.051,
    2.250, 0.404, 0.045, 0.045,
    2.300, 0.179, 0.037, 0.037,
    2.350, 0.219, 0.037, 0.037,
    2.400, 0.240, 0.039, 0.039,
    2.450, 0.200, 0.040, 0.040,
    2.500, 0.214, 0.039, 0.039;
```

Construction

For walls, roofs, floors, windows, and doors, constructions are “built” from the included materials. Each layer of the construction is a material name listed in order from “outside” to

"inside". Up to ten layers (eight for windows) may be specified (one of the few limitations in EnergyPlus!). "Outside" is the layer furthest away from the Zone air (not necessarily the outside environment). "Inside" is the layer next to the Zone air. In FLOOR38 below, for example, the outside layer is the acoustic tile below the floor, the next layer is the air space above the tile, and the inside layer is the concrete floor deck.

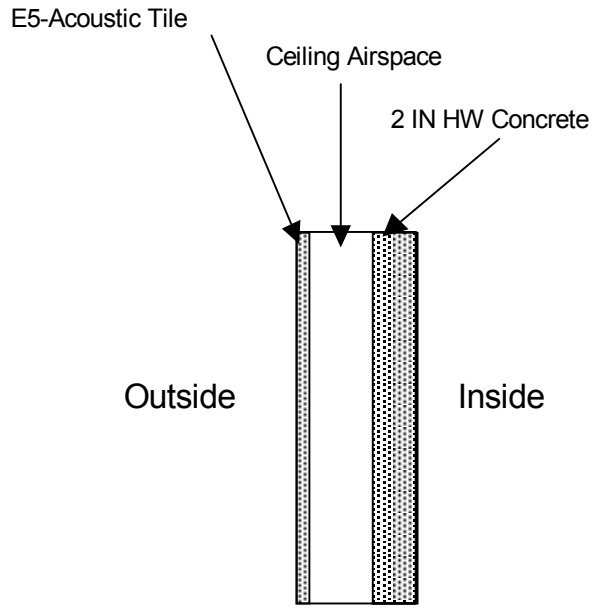

Figure 8. Floor 38 illustration

Window constructions are similarly built up from Material:WindowGlass, Material:WindowGas, Material:WindowGasMixture, Material:WindowShade and Material:WindowBlind layers (see Figure 9. Illustration for material ordering in Windows). The gap between the inside glass layer (layer #3) and the shading layer is not entered. A maximum of four glass layers and one shading layer is allowed. If there is a shading layer, it must be the first or last layer (no between-pane shading devices!). A gas layer must always separate adjacent glass layers in a multi-pane glazing.

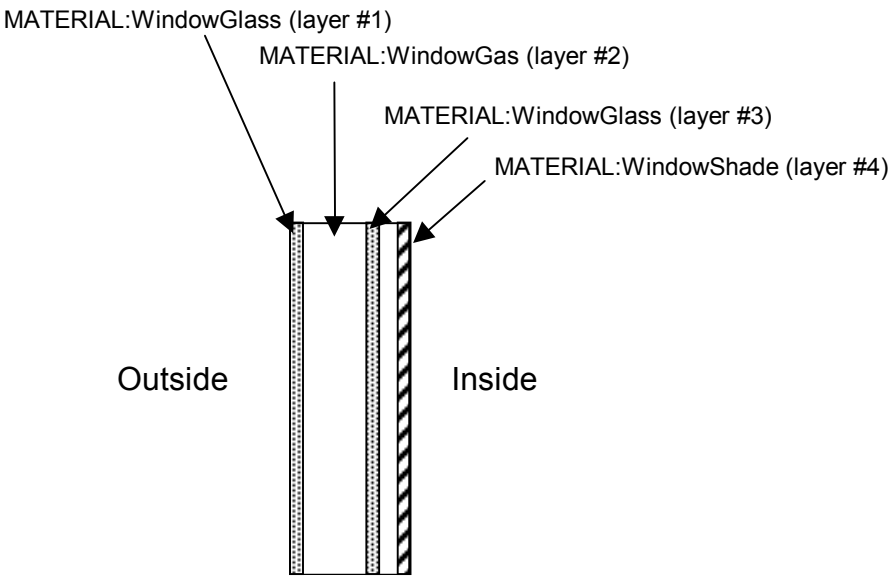

Figure 9. Illustration for material ordering in Windows

Outside and inside air film resistances are never given as part of a wall, roof, floor, window, or door definition since they are calculated during the EnergyPlus simulation. Note also that constructions are assumed to be one-dimensional.

Field: Name

This field is a user specified name that will be used as a reference by other input syntax. For example, a heat transfer surface (ref: Surface:HeatTransfer) requires a construction name to define what the make-up of the wall is. This name must be identical to one of the CONSTRUCTION definitions in the input data file.

Field: Outside Layer

Each construction must have at least one layer. This field defines the material name associated with the layer on the outside of this construction—outside referring to the side that is not exposed to the zone but rather the opposite side environment, whether this is the outdoor environment or another zone. Material layers are defined based on their thermal properties elsewhere in the input file (ref: Material:Regular, Material: Regular-R, Material:WindowGlass, Material:WindowGas, Material:WindowShade). As noted above, the outside layer should NOT be a film coefficient since EnergyPlus will calculate convection and radiation heat transfer more precisely.

Field(s) 2-10: Layers

The next fields are optional and the number of them showing up in a particular CONSTRUCTION definition depends solely on the number of material layers present in that particular construction. The data expected is identical to the outside layer field (see previous field description). The order of the remaining layers is important and should be listed in order of occurrence from the one just inside the outside layer until the inside layer is reached. As noted above, the inside layer should NOT be a film coefficient since EnergyPlus will calculate convection and radiation heat transfer more precisely.

```
CONSTRUCTION,
       \memo Start with outside layer and work your way to the Inside Layer
       \memo Up to 10 layers total, 8 for windows
       \memo Put in the ascii material name for each layer
  A1 , \field Name
       \type alpha
       \reference ConstructionNames
  A2 , \field Outside Layer
       \type object-list
       \object-list MaterialName
  A3 , \field Layer #2
       \type object-list
       \object-list MaterialName
  A4 , \field Layer #3
       \type object-list
       \object-list MaterialName
  A5 , \field Layer #4
       \type object-list
       \object-list MaterialName
  A6 , \field Layer #5
       \type object-list
       \object-list MaterialName
  A7 , \field Layer #6
       \type object-list
       \object-list MaterialName
  A8 , \field Layer #7
       \type object-list
       \object-list MaterialName
  A9 , \field Layer #8
       \type object-list
       \object-list MaterialName
  A10, \field Layer #9
       \type object-list
       \object-list MaterialName
  A11; \field Layer #10
       \type object-list
       \object-list MaterialName
```

IDF Example (floor construction):

```
CONSTRUCTION, FLOOR38,  ! Material layer names follow:
      E5 - ACOUSTIC TILE,
      E4 - CEILING AIRSPACE,
      C12 - 2 IN HW CONCRETE;
```

IDF Example (window construction, no shade):

```
CONSTRUCTION, DOUBLE PANE WINDOW,  !- Material layer names follow:
      GLASS - CLEAR SHEET 1 / 8 IN,
      WinAirB1 - AIRSPACE RESISTANCE,
      GLASS - CLEAR SHEET 1 / 8 IN;
```

IDF Example (window construction, with interior shade):

```
CONSTRUCTION, DOUBLE PANE WITH ROLL SHADE,  !- Material layer names follow:
      GLASS - CLEAR SHEET 1 / 8 IN,
      WinAirB1 - AIRSPACE RESISTANCE,
      GLASS - CLEAR SHEET 1 / 8 IN,
      ROLL SHADE - LIGHT
```

Construction With Internal Source

In some cases such as radiant systems, a construction will actually have resistance wires or hydronic tubing embedded within the construction. Heat is then either added or removed from this building element to provide heating or cooling to the zone in question. It is possible to enter such constructions into EnergyPlus with the CONSTRUCTION WITH INTERNAL SOURCE syntax described below. The definition is similar to the CONSTRUCTION definition with a few additions related to radiant systems.

Field: Name

This field is a user specified name that will be used as a reference by other input syntax. For example, a heat transfer surface (ref: Surface:HeatTransfer) requires a construction name to define what the make-up of the wall is. This name must be identical to one of the CONSTRUCTION definitions in the input data file.

Field: Source Interface

This field is an integer that relates the location of the heat source or sink. The integer refers to the list of material layers that follow later in the syntax and determines the layer after which the source is present. If a source is embedded within a single homogenous layer (such as concrete), that layer should be split into two layers and the source added between them. For example, a value of "2" in this field tells EnergyPlus that the source is located between the second and third material layers listed later in the construction description (see layer fields below).

Field: User-defined Temperature Calculation Interface

The nature of this field is similar to the source interface parameter (see previous field) in that it is an integer, refers to the list of material layers that follow, and defines a location after the layer number identified by the user-defined number. In this case, the user is specifying the location for a separate temperature calculation rather than the location of the heat source/sink. This feature is intended to allow users to calculate a temperature within the construction. This might be important in a radiant cooling system where condensation could be a problem. This temperature calculation can assist users in making that determination in absence of a full heat and mass balance calculation.

Field: Solution Dimensions

This field is also an integer and refers to the detail level of the calculation. A value of "1" states that the user is only interested in a one-dimensional calculation. This is appropriate for electric resistance heating and for hydronic heating (when boiler/hot water heater performance is not affected by return and supply water temperatures). A value of "2" will trigger a two-dimensional solution for this surface only. This may be necessary for hydronic radiant cooling situations since chiller performance is affected by the water temperatures provided.

A few things should be noted about requesting two-dimensional solutions. First, the calculation of the conduction transfer functions is fairly intensive and will require a significant amount of computing time. Second, the solution regime is two-dimensional internally but it has a one-dimensional boundary condition imposed at the inside and outside surface (i.e., surface temperatures are still isothermal is if the surface was one-dimensional).

Note – due to calculation problems with the two-dimensional solution discovered during testing, this option is disabled until more work can be done.

Field: Tube Spacing

This field defines how far apart in meters the hydronic tubing or electrical resistance wires are spaced in the direction perpendicular to the main direction of heat transfer. Note that this parameter is only used for two-dimensional solutions (see previous field).

Field: Outside Layer

Each construction must have at least one layer. This field defines the material name associated with the layer on the outside of this construction—outside referring to the side that is not exposed to the zone but rather the opposite side environment, whether this is the outdoor environment or another zone. Material layers are defined based on their thermal properties elsewhere in the input file (ref: Material:Regular, Material: Regular-R, Material:WindowGlass, Material:WindowGas, Material:WindowShade). As noted above, the outside layer should NOT be a film coefficient since EnergyPlus will calculate convection and radiation heat transfer more precisely.

Field(s) 2-10: Layers

The next fields are optional and the number of them showing up in a particular CONSTRUCTION definition depends solely on the number of material layers present in that particular construction. The data expected is identical to the outside layer field (see previous field description). The order of the remaining layers is important and should be listed in order of occurrence from the one just inside the outside layer until the inside layer is reached. As noted above, the inside layer should NOT be a film coefficient since EnergyPlus will calculate convection and radiation heat transfer more precisely.

```
CONSTRUCTION WITH INTERNAL SOURCE,
       \memo Start with outside layer and work your way to the Inside Layer
       \memo Up to 10 layers total, 8 for windows
       \memo Put in the ascii material name for each layer
  A1 , \field Name
       \type alpha
       \reference ConstructionNames
  N1 , \field Source present after layer N1
       \type integer
       \memo refers to the list of materials which follows
  N2 , \field Temperature calculation requested after layer N2
       \type integer
       \memo refers to the list of materials which follows
  N3 , \field Dimensions for the CTF calculation
       \type integer
       \minimum 1
       \maximum 2
       \memo 1 = 1-dimensional calculation, 2 = 2-dimensional calculation
  N4 , \field Tube Spacing
       \type real
       \units m
       \memo uniform spacing between tubes or resistance wires in direction
       \memo perpendicular to main intended direction of heat transfer
  A2 , \field Outside Layer
       \type object-list
       \object-list MaterialName
  A3 , \field Layer #2
       \type object-list
       \object-list MaterialName
  A4 , \field Layer #3
       \type object-list
       \object-list MaterialName
  A5 , \field Layer #4
       \type object-list
       \object-list MaterialName
  A6 , \field Layer #5
       \type object-list
       \object-list MaterialName
  A7 , \field Layer #6
       \type object-list
       \object-list MaterialName
  A8 , \field Layer #7
       \type object-list
       \object-list MaterialName
  A9 , \field Layer #8
       \type object-list
       \object-list MaterialName
  A10, \field Layer #9
       \type object-list
       \object-list MaterialName
  A11; \field Layer #10
       \type object-list
       \object-list MaterialName
```

Construction from Window5 Data File

The WINDOW 5 program, which does a thermal and optical analysis of a window under different design conditions, writes a data file (“Window5 data file”) containing a description of the window that was analyzed. The Construction from Window5 Data File object allows a window to be read in from the Window5 data file—see “Importing Windows from WINDOW 5.” For information on adding a shading device to the window see “WindowShadingControl.”

This object has only one field, and it is required:

Field: Name

This is the name of a window on the Window5 data file. An error will result if EnergyPlus cannot find a window of this name on the file, or if the file, called Window5DataFile.dat, is not present. For details on what is done with the data if a matching window is found on the file see “Importing Windows from WINDOW 5.”

```
CONSTRUCTION FROM WINDOW5 DATA FILE,
       \memo Initiates search of the Window5 data file for a window called Name.
  A1 ; \field Name
       \required-field
       \type alpha
       \reference ConstructionNames
```

Input Example

```
CONSTRUCTION FROM WINDOW5 DATA FILE,
  DoubleClear;          !- Name of a Window on the Window5 Data File

SURFACE:HEATTRANSFER:SUB,
  Zn001:Wall001:Win001, !- SubSurface Name
  Window,               !- Class
  DoubleClear,          !- Construction Name
  Zn001:Wall001,,       !- Base Surface Name, and Target (if applicable)
  0.5,                  !- View Factor to Ground
  ,                     !- Window Shading Control name
  ,                     !- Frame/Divider name
  1.0,                  !- Multiplier
  4,                    !- Number of vertices
  0.548, 0.0, 2.5000,   !- X,Y,Z of Vertices
  0.548, 0.0, 0.5000,
  5.548, 0.0, 0.5000,
  5.548, 0.0, 2.5000;
```

Construction Element Outputs

An optional report (contained in **eplusout.eio**) gives calculational elements for the materials and constructions used in the input. One report is specific to opaque constructions (note that nominal thermal conductance is calculated).

The report is invoked by including the following in the IDF:

```
Report,Construction;
```

```
! <Construction>,Construction Name,#Layers,#CTFs,Time Step {hours},ThermalConductance {w/m2-
K},OuterThermalAbsorptance,InnerThermalAbsorptance,OuterSolarAbsorptance,InnerSolarAbsorptance,Roughness
! <Material>,Material Name,Thickness {m},Conductivity {w/m-K},Density {kg/m3},Specific Heat {J/kg-
K},ThermalResistance {m2-K/w}
! <Material:Air>,Material Name,ThermalResistance {m2-K/w}
! <CTF>,Time,Outside,Cross,Inside,Flux (except final one)
 Construction,EXTWALL09,   4,  10,   0.250,      2.545    ,   0.900,   0.900,   0.930,   0.920,Rough
 Material,A2 - 4 IN DENSE FACE BRICK,  0.1015,   1.245,   2082.400,      920.480,  0.8151E-01
 Material:Air,B1 - AIRSPACE RESISTANCE,  0.1604
 Material,C3 - 4 IN HW CONCRETE BLOCK,  0.1015,  0.813,    977.126,      836.800,  0.1249
 Material,E1 - 3 / 4 IN PLASTER OR GYP BOARD,  0.0191, 0.726,   1601.846,      836.800,  0.2622E-01
 CTF,  10,      0.13890138E-11,      0.95367648E-14,      0.62566281E-10,     -0.39500133E-14
 CTF,   9,     -0.32803336E-08,      0.29933755E-10,     -0.60855613E-07,      0.10196216E-10
 CTF,   8,      0.23798948E-05,      0.21201413E-07,      0.21649376E-04,     -0.88463084E-08
 CTF,   7,     -0.58681847E-03,      0.38118098E-05,     -0.26539198E-02,      0.25879187E-05
 CTF,   6,      0.46201324E-01,      0.18871269E-03,      0.12095720    ,     -0.26290432E-03
 CTF,   5,      -1.2828328    ,      0.27337395E-02,      -2.1646103    ,      0.91268499E-02
 CTF,   4,       13.603723    ,      0.11920108E-01,       17.065325    ,     -0.12663354
 CTF,   3,      -62.546625    ,      0.15112689E-01,      -64.276824    ,      0.73877389
 CTF,   2,       133.27916    ,      0.47414487E-02,       120.00640    ,      -1.9706501
 CTF,   1,      -130.02410    ,      0.22383019E-03,      -106.88260    ,       2.3359193
 CTF,   0,       46.959981    ,      0.53137072E-06,       36.168919
```

A separate report is available for windows (note that both nominal conductance and Solar Heat Gain Coefficient are calculated for windows):

```
! <WindowConstruction>,Construction Name,#Layers,Roughness,Conductance {w/m2-
K},SHGC,SolarTransmittanceNormalIncid,VisibleTransmittanceNormalIncid,DiffuseSolarTransmittance,DiffuseVis
ibleTransmittance,DiffuseFrontSolarReflectance,DiffuseBackSolarReflectance,DiffuseFrontVisibleReflectance,
DiffuseBackVisibleReflectance
! <WindowConstruction>,Construction Name,#Layers,Roughness,Conductance {w/m2-
K},SHGC,SolarTransmittanceNormalIncid,VisibleTransmittanceNormalIncid
! <Material:WindowGlass>,Material Name,Thickness {m},Conductivity {w/m-
K},SolarTransmittance,VisibleTransmittance,ThermalFrontAbsorptance,ThermalBackAbsorptance,SolarFrontReflec
tance,SolarBackReflectance,VisibleFrontReflectance,VisibleBackReflectance
! <Material:WindowGas>,Material Name,GasType,Thickness {m}
! <Material:WindowShade>,Material Name,Thickness {m},Conductivity {w/m-
K},ThermalAbsorptance,Transmittance,VisibleTransmittance,ShadeReflectance
! <Material:WindowBlind>,Material Name,SlatWidth {m},SlatSeparation {m},SlatThickness {m},SlatAngle
{deg},SlatBeamSolarTransmittance,SlatBeamSolarFrontReflectance,BlindToGlassDistance {m}
Construction,ELECTRO-CON-LIGHT,   3,VerySmooth,   2.657,   0.704,   0.576,   0.746,   0.479,   0.640,
0.208,   0.178,   0.241,   0.238
 Material:WindowGlass,ELECTRO GLASS LIGHT STATE,  0.006,  0.900,  0.814,  0.847,  0.840,  0.840,  0.086,
0.086,  0.099,  0.099
 Material:WindowGas,WINAIRGAP,Air,  1.300E-02,  2.410E-02,  1.290E+00,  1.730E-05,  7.200E-01
 Material:WindowGlass,SPECTRAL GLASS INNER PANE,  0.010,  0.798,  0.000,  0.000,  0.840,  0.840,  0.000,
0.000,  0.000,  0.000
 Construction,ELECTRO-CON-DARK,   3,VerySmooth,   2.657,   0.187,   0.079,   0.113,   0.062,   0.083,
0.214,   0.210,   0.129,   0.214
 Material:WindowGlass,ELECTRO GLASS DARK STATE,  0.006,  0.900,  0.111,  0.128,  0.840,  0.840,  0.179,
0.179,  0.081,  0.081
 Material:WindowGas,WINAIRGAP,Air,  1.300E-02,  2.410E-02,  1.290E+00,  1.730E-05,  7.200E-01
 Material:WindowGlass,SPECTRAL GLASS INNER PANE,  0.010,  0.798,  0.000,  0.000,  0.840,  0.840,  0.000,
0.000,  0.000,  0.000
```

Group – Thermal Zone Description/Geometry

Without thermal zones and surfaces, the building can't be simulated. This group of objects (Zone, Surface) describes the thermal zone characteristics as well as the details of each surface to be modeled. Included here are shading surfaces.

Zone

This element sets up the parameters to simulate each thermal zone of the building.

Field: North Axis

The Zone North Axis is specified **relative to the Building North Axis**. This value is specified in degrees (clockwise is positive). For more information, see the figure below as well as the description under "SurfaceGeometry".

Field(s): Origin (X,Y,Z)

The X,Y,Z coordinates of a zone origin can be specified, for convenience in vertice entry. Depending on the values in "SurfaceGeometry" (see description later in this section), these will be used to completely specify the building coordinates in "world coordinate" or not. Zone Origin coordinates are specified **relative to the Building Origin (which always 0,0,0)**. The following figure illustrates the use of Zone North Axis as well as Zone Origin values.

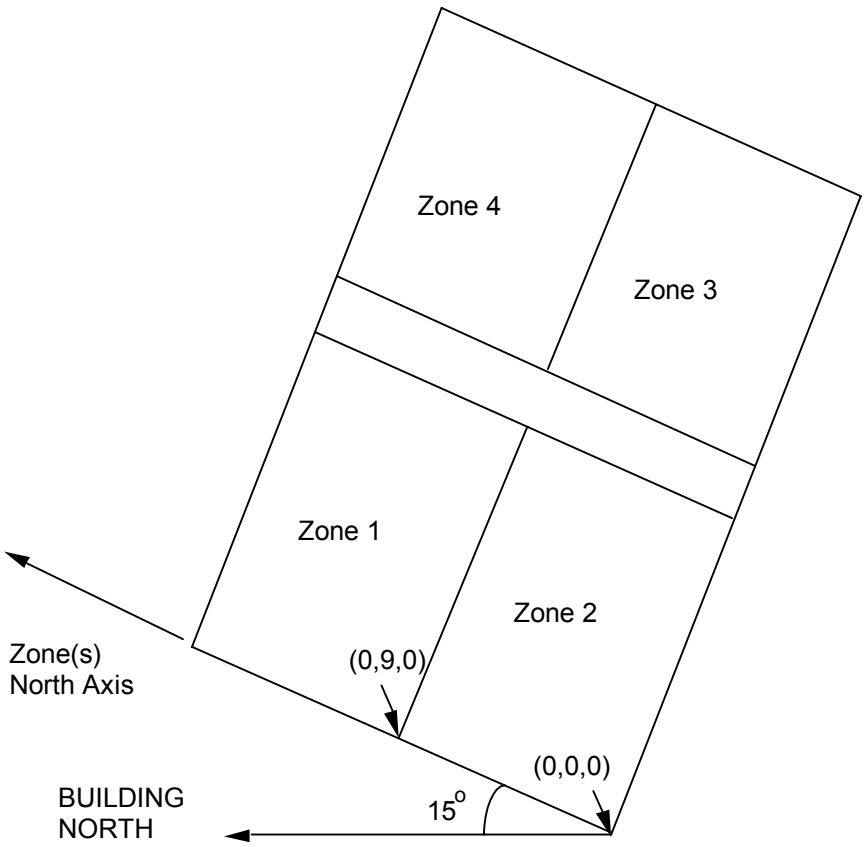

Figure 10. Illustration of Zone North Axis and Origins

Field: Type

Zone type is currently unused.

Field: Multiplier

Zone Multiplier is designed as a "multiplier" for zone loads. It takes the calculated load for the inputted zone and multiplies it and sends the multiplied load to the attached system to meet the demand. The system will have to be specified to meet the entire multiplied zone load and will report the amount of the load it can meet in the Zone/Sys Sensible Heating or Cooling Energy/Rate report variable. The default is 1.

Field: Ceiling Height

Zone ceiling height is used in several areas within EnergyPlus. Energyplus automatically calculates the zone ceiling height (m) from the average height of the zone. If this field is 0.0 or negative, then the calculated zone ceiling height will be used in subsequent calculations. If this field is positive, then the calculated zone ceiling height will not be used -- the number entered here will be used as the zone ceiling height. If this number differs significantly from the calculated ceiling height, then a warning message will be issued.

Note that the Zone Ceiling Height is the distance from the Floor to the Ceiling in the Zone, not an absolute height from the ground.

Field: Volume

Zone volume is used in several areas within EnergyPlus. EnergyPlus automatically calculates the zone volume (m^3) from the zone geometry given by the surfaces that belong to the zone. If this field is 0.0 or negative, then the calculated zone volume will be used in subsequent calculations. If this field is positive, then the calculated zone volume will be replaced by the number entered here. If this number differs significantly from the calculated zone volume a warning message will be issued.

Field: Zone Inside Convection Algorithm

The Zone Inside Convection Algorithm field is optional. This field specifies the convection model to be used in the zone. See the Zone Inside Convection Algorithm object for descriptions of the available models.

If omitted, the algorithm specified in the Inside Convection Algorithm object is the default.

```
ZONE,
  A1 , \field Zone Name
       \type alpha
       \reference ZoneNames
  N1 , \field Relative North (to building)
       \units deg
       \type real
  N2 , \field X Origin
       \units m
       \type real
  N3 , \field Y Origin
       \units m
       \type real
  N4 , \field Z Origin
       \units m
       \type real
  N5 , \field Type
       \type integer
       \maximum 1
       \minimum 1
       \default 1
  N6 , \field Multiplier
       \type real
  N7 , \field Ceiling Height
       \units m
       \type real
  N8 , \field Volume
       \units m3
       \type real
       \default 0
  A2 ; \field Zone Inside Convection Algorithm
       \type choice
       \key Simple
       \key Detailed
       \key CeilingDiffuser
       \key TrombeWall
       \note Will default to same value as Inside Convection Algorithm object
       \note setting this field overrides the default Inside Convection Algorithm for this zone
       \note Simple = constant natural convection (ASHRAE)
       \note Detailed = variable natural convection based on temperature difference (ASHRAE)
       \note CeilingDiffuser = ACH based forced and mixed convection correlations
       \note  for ceiling diffuser configuration with simple natural convection limit
       \note TrombeWall = variable natural convection in an enclosed rectangular cavity
```

And, an IDF example:

```
ZONE, DORM ROOMS AND COMMON AREAS,   ! Zone Name
  0.0000000E+00,   ! Zone North Axis (relative to Building)
  0.0000000E+00,   ! Zone X Origin {m}
   6.096000    ,   ! Zone Y Origin {m}
  0.0000000E+00,   ! Zone Z Origin {m}
           1,   ! Zone Type
           1,   ! Zone Multiplier
  -100.0000    ,   ! Zone Ceiling Height {m}
  0.0000000E+00;   ! Zone Volume {m**3}
```

Zone Outputs

Each zone command produces zone outputs that echo the input fields above. However, the values to be used for the Zone Ceiling Height and Volume will be displayed if the entered fields are negative or zero. More details on this report are shown in the Output Details and Examples document.

```
! <Zone Information>,Zone Name,North Axis {deg},X Origin {m},Y Origin {m},Z Origin {m},Type,Multiplier,
Ceiling Height {m},Volume {m3},Zone Inside Convection Algorithm {Simple-Detailed-CeilingDiffuser-
TrombeWall}, Floor Area {m2},Exterior Gross Wall Area {m2},Exterior Net Wall Area {m2},Exterior Window
Area {m2}
 Zone, PSI FOYER,   0.000,   0.000,   0.000,   0.000,   1,   1,   4.953,   478.555,Detailed,    96.619,
70.606,    70.606,   106.838
 Zone, DORM ROOMS AND COMMON AREAS,   0.000,   0.000,   6.096,   0.000,   1,   1,   6.096,
2718.417,Detailed,   445.935,   312.154,   267.561,    44.593
 Zone, LEFT FORK, -36.870,   0.000,  31.699,   0.000,   1,   1,   6.096,   453.070,Detailed,    74.322,
185.806,   135.638,    50.168
 Zone, MIDDLE FORK,   0.000,   4.877,  35.357,   0.000,   1,   1,   6.096,   453.070,Detailed,    74.322,
185.806,   155.705,    30.101
 Zone, RIGHT FORK,  36.870,  10.973,  35.357,   0.000,   1,   1,   6.096,   453.070,Detailed,    74.322,
185.806,   135.638,    50.168
```

Surface(s)

What's a building without surfaces?

EnergyPlus allows for several surface types:

- **Surface:HeatTransfer**
- **Surface:HeatTransfer:Sub**
- **Surface:Shading:Detached**
- **Surface:Shading:Detached:Fixed**
- **Surface:Shading:Detached:Building**
- **Surface:Shading:Attached**

Each of the preceding surfaces has "correct" geometry specifications. **Heat transfer** surfaces are used to describe the important elements of the building (walls, roofs, floors, windows, doors) that will determine the interactions of the building surfaces with the outside environment parameters and the internal space requirements. Heat transfer surfaces are also used to represent "interzone" heat transfer. During specification of surfaces, several "outside" environments may be chosen:

- **Ground** – when the surface is in touch with the ground (e.g. slab floors)
- **ExteriorEnvironment** – when the surface is an external surface (e.g. walls, roofs, windows directly exposed to the outdoor conditions)
- **OtherZoneSurface** – when the surface is
  - An adiabatic internal zone surface
  - A interzone surface
- **OtherSideCoeff** – when using a custom profile to describe the external conditions of the surface (advanced concept – covered in Other Side Coefficients)

OtherZoneSurface items must also specify an "outside face object". This is

- Current surface name – for adiabatic internal surfaces.
- A surface name in another zone – for interzone heat transfer.
- An "opposing" surface name (in the current zone) – for representing "middle" zones.

Note that heat transfer surfaces are fully represented with each description. As stated earlier in the Construction description, materials in the construction (outside to inside) are included but film coeffients neither inside nor outside are used in the description – these are automatically calculated during the EnergyPlus run. Interzone surfaces which do not have a symmetrical construction (such as a ceiling/floor) require two CONSTRUCTION objects with the layers in reverse order. For example, CEILING with carpet,

concrete, ceiling tile and FLOOR with ceiling tile, concrete, carpet. If interzone surfaces have a symmetrical construction, the specification for the two surfaces can reference the same CONSTRUCTION.

Shading surfaces are used to describe aspects of the site which do not directly impact the physical interactions of the environmental parameters but may significantly shade the building during specific hours of the day or time so the year (e.g. trees, bushes, mountains, nearby buildings which aren't being simulated as part of this facility, etc.)

Note that surfaces which are part of the simulated building automatically shade other parts of the building as geometry and time of day dictate – there is no need on the user's part to include surfaces that might be in other zones for shading.

Another surface type:

- **Surface:HeatTransfer:InternalMass**

is used to specify the construction/material parameters and area of items within the space that are important to heat transfer calculations but not necessarily important geometrically. (For example, furniture within the space – particularly for large spaces). Internal mass can also be used for internal walls that are not needed (when FullInteriorAndExterior Solar Distribution is in effect) for solar distribution or to represent many, if not all, interior walls when solar is distributed to the floors only.

Interzone Surfaces

EnergyPlus can quite accurately simulate the surface heat exchange between two zones. However, this accuracy is not always required and using interzonal heat transfer does add to the complexity of the calculations – thus requiring more CPU time to simulate. More information about interzonal heat transfer calculations is contained in the Engineering Reference. Some simple guidelines are presented here – for three cases: adiabatic surfaces, surfaces in "middle" zones, and surfaces where heat transfer is "expected" (e.g. between a residence and an unheated, attached garage).

- Adiabatic Surfaces – These surfaces would be represented as common surfaces (between two zones) where both zones are typically the same temperature. Thus, no transfer is expected in the surface from one zone to the next. These surfaces should be described as simply internal surfaces for the zone referencing as their OUTSIDE FACE ENVIRONMENT OBJECT (see later description in individual surface objects) their own surface names.
- Surfaces in Middle Zones – Middle zones in a building can be simulated using a judicious use of surfaces and zone multipliers to effect the correct "loads" for the building. Thus, middle zone behavior can be simulated without modeling the adjacent zones. This is done by specifying a surface within the zone. For example, a middle floor zone can be modeled by making the floor the Outside Face Environment Object for the ceiling, and the ceiling the Outside Face Environment Object for the floor.
- Surfaces between Zones with differing temperatures – These zones represent the true use of interzone surfaces. In a residence that has an attached garage, the garage may be unheated/uncooled or at least not conditioned to the same degree as the residence interior. In this case, EnergyPlus can be used to accurately calculate the effects of the differently conditioned space to the other spaces.

Surface View Factors

EnergyPlus uses an area weighted approximation to calculate "view factors" between surfaces within a thermal zone. Each surface uses the total area that it can “see” among the other surfaces. The approximate view factor from this surface to each other surface is then the area of the receiving surface over the sum of areas that is visible to the sending surface.

In order to account in some limited way for the fact that certain surfaces will not see each other, several assumptions have been built into this simple view factor approximation. First, a surface cannot see itself. Second, surfaces with approximately the same azimuth (facing direction) and tilt ("same" being within a built in limit) will not see each other. This means that a window will not see the wall that it is placed on, for example. Third, floors cannot see each other. Fourth, if the surface is a floor, ceiling, roof, or internal mass, the rule for the same azimuth and tilt eliminating radiant exchange between surface is waived when the receiving surface is floor, roof, ceiling, or internal mass as long as both surfaces are not floors.

Note that this does not take into account that surfaces may be "around the corner" from each other and in reality not see each other at all. Rooms are assumed to be convex rather than concave in this method.

To summarize, using the Surface “Class”, the approximate view factors have:

4) No surface sees itself.

5) No Floor sees another floor.

6) All other surface types see Internal Mass.

7) All other surface types see floors.

8) Floors always see ceilings.

9) Floors always see roofs.

10) All other surfaces whose tilt or facing angle differences are greater than 10 degrees see each other.

If geometry is correct, conditions 1,3, and 7 should take care of all surfaces, but the other conditions supply common sense when the geometry is incorrect. More information about the EnergyPlus view factor calculation is contained in the Engineering Reference document.

SurfaceGeometry

Before the surface objects are explained in detail, a description of geometric parameters used in EnergyPlus will be given. Since the input of surface vertices is common to most of the surface types, it will also be given a separate discussion.

Some flexibility is allowed in specifying surface vertices. This flexibility is embodied in the SurfaceGeometry class/object in the input file. Note that the parameters specified in this statement are used for all surface vertice inputs – there is no further “flexibility” allowed.

In order to perform shadowing calculations, the building surfaces must be specified. EnergyPlus uses a three dimensional (3D) Cartesian coordinate system for surface vertex specification. This Right Hand coordinate system has the X-axis pointing east, the Y-axis pointing north, and the Z-axis pointing up. See figure below.

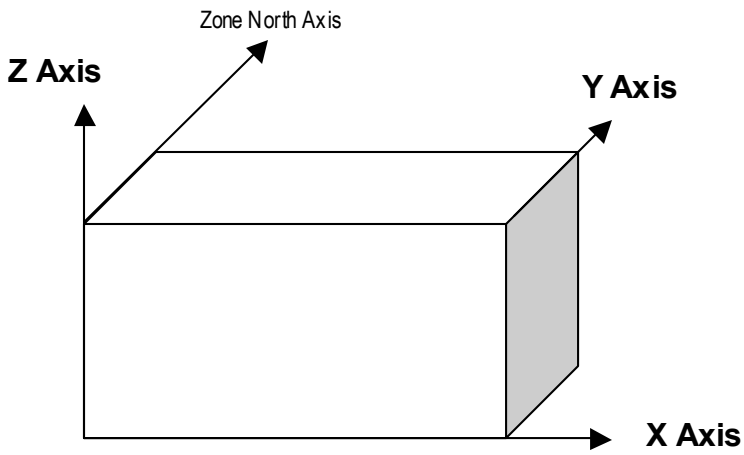

Figure 11. EnergyPlus Coordinate System

```
SurfaceGeometry, \note type of vertices being used, entry details
  A1, \field SurfaceStartingPosition
      \note Specified as entry for a 4 sided surface/rectangle
      \note Surfaces are specified as viewed from "outside" the surface
      \note Shading surfaces ...
      \type choice
      \key ULC - Upper Left Corner
      \key UpperLeftCorner
      \key LLC - Lower Left Corner
      \key LowerLeftCorner
      \key URC - Upper Right Corner
      \key UpperRightCorner
      \key LRC - Lower Right Corner
      \key LowerRightCorner
  A2, \field VertexEntry
      \type choice
      \key CCW - Counter Clock Wise
      \key CounterClockWise
      \key CW  - Clock Wise
      \key ClockWise
  A3; \field SurfaceGeometryKey
      \type choice
      \key relative -- coordinates are entered relative to zone origin
      \key WCS -- "world coordinate system" -- all coordinates entered are "absolute" for this facility
      \key WorldCoordinateSystem
```

Field: SurfaceStartingPosition

The shadowing algorithms in EnergyPlus rely on surfaces having vertices in a certain order and positional structure. Thus, the surface translator needs to know the starting point for each surface entry. The choices are: UpperLeftCorner (ULC), LowerLeftCorner (LLC), UpperRightCorner (URC), or LowerRightCorner (LRC). Since most surfaces will be 4 sided, the convention will specify this position as though each surface were 4 sided. Extrapolate 3 sided figures to this convention. In the future, 5 and more sided figures will be allowed; again, the most reasonable option for this should be used (or will be changed when 5 and more sided figures are allowed).

Field: VertexEntry

Surfaces are always specified as being viewed from the outside of the zone to which they belong. (Shading surfaces are specified slightly differently and are discussed under the particular types). EnergyPlus needs to know whether the surfaces are being specified in counterclockwise or clockwise order (from the SurfaceStartingPosition). EnergyPlus uses this to determine the outward facing normal for the surface (which is the *facing angle* of the surface – very important in shading and shadowing calculations.

Field: SurfaceGeometryKey

Vertices can be specified in two ways: using "Absolute"/"World" coordinates, or a **relative** coordinate specification. Relative coordinates allow flexibility of rapid change to observe changes in building results due to orientation and position. "World" coordinates will facilitate use within a CADD system structure.

Relative coordinates make use of both Building and Zone North Axis values as well as Zone Origin values to locate the surface in 3D coordinate space. **World** coordinates do not use these values.

Typically, all zone origin values for "World" coordinates will be (0,0,0) but Building and Zone North Axis values may be used in certain instances (namely the Daylighting Coordinate Location entries).

Surface Vertices

Each of the following surfaces -- Surface:HeatTransfer, Surface:HeatTransfer:Sub, Surface:Shading:Detached, and Surface:Shading:Attached -- uses the same vertex input. The numeric parameters indicated below are taken from the Surface:HeatTransfer definition; the others may not be exactly the same but are identical in configuration. In addition, these are by intention the last fields listed for each object class. This will enable EnergyPlus to incorporate 5 and more sided surface inputs later on.

```
N2 , \field Number of Surface Vertices -- Number of (X,Y,Z) groups in this surface
     \note currently limited 3 or 4, later?
     \minimum 3
     \maximum 4
     \memo vertices are given in SurfaceGeometry coordinates -- if relative, all surface coordinates
     \memo are "relative" to the Zone Origin.  if WCS, then building and zone origins are used
     \memo for some internal calculations, but all coordinates are given in an "absolute" system.
N3,  \field Vertex 1 X-coordinate
     \units m
     \type real
N4 , \field Vertex 1 Y-coordinate
     \units m
     \type real
N5 , \field Vertex 1 Z-coordinate
     \units m
     \type real
< repeated for Vertex 2 through 4>, same order as above
```

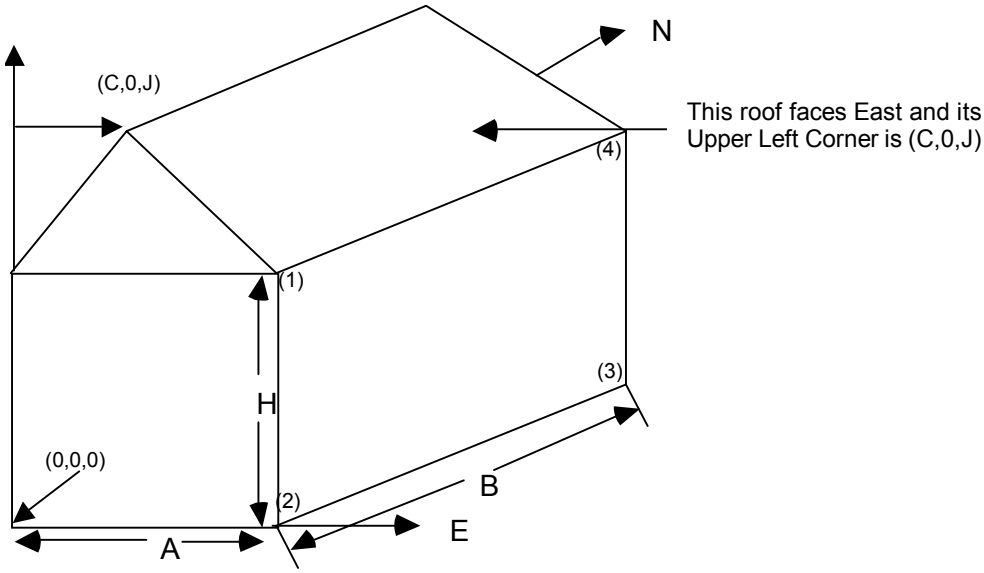

Figure 12. Illustration for Surface Vertices

The figure above will help illustrate Surface Vertice entry. The convention used in "SurfaceGeometry" dictates the order of the vertices (ref: SurfaceGeometry). In this example, the conventions used are SurfaceStartingPosition = UpperLeftCorner and VertexEntry = CounterClockwise. The surfaces for this single zone are:

```
4,0,0,H, 0,0,0, A,0,0, A,0,H; ! (4 vertices, South Wall)
4,A,0,H,A,0,0,A,B,0,A,B,H;  ! (4 vertices, East Wall)
     ignore other walls that are not shown in this figure
4,C,0,J,A,0,H,A,B,H,C,B,J; ! (4 vertices, roof)
3,C,0,J,0,0,H,A,0,H; ! (3 vertices, gable end)
4,0,0,H, 0,0,0, A,0,0, A,0,H; ! (4 vertices, South Wall)
```

Note that in this example, point 1 of the entry is the Upper Left Corner of the rectangular surfaces and the point of the triangle for the 3 sided surface. The east wall shows the order of vertex entry. For horizontal surfaces, any vertex may be chosen as the starting position, but the VertexEntry convention must be followed. The surface details report (Report, Surfaces, Details;) is very useful for reviewing the accuracy of surface geometry inputs (ref: Surface Output Variables/Reports and Report).

Surface:HeatTransfer

The heat transfer surface is necessary for all calculations. There must be at least one heat transfer surface per zone. The IDD definition, up to the number of surface sides, is shown below:

```
Surface:HeatTransfer, \note used for base surfaces of all types
  A1 , \field User Supplied Surface Name
       \type alpha
       \reference SurfaceNames
  A2 , \field Surface Type
       \type choice
       \key FLOOR
       \key WALL
       \key CEILING
       \key ROOF
  A3 , \field Construction Name of the Surface
       \note To be matched with a construction in this input file
       \type object-list
       \object-list ConstructionNames
  A4 , \field InsideFaceEnvironment
       \note Zone the surface is a part of
       \type object-list
       \object-list ZoneNames
  A5 , \field OutsideFaceEnvironment
       \type choice
       \key OtherZoneSurface
       \key ExteriorEnvironment
       \key Ground
       \key OtherSideCoeff
  A6,  \field OutsideFaceEnvironment Object
       \type object-list
       \object-list ZoneNames
       \object-list OSCNames
       \note Used only if OutsideFaceEnvironment is OtherZone or OtherSideCoeff
       \note If OtherZone, specify name of corresponding surface in adjacent zone
       \note If OtherSideCoeff, specify name of OtherSideCoefficients
  A7 , \field Sun Exposure
       \type choice
       \key SunExposed
       \key NoSun
  A8, \field Wind Exposure
       \type choice
       \key WindExposed
       \key NoWind
  N1, \field View Factor to Ground
       \type real
       \note From the exterior of the surface
  N2 , \field Number of Surface Vertices -- Number of (X,Y,Z) groups in this surface
```

Field: User supplied surface name

This is a unique character string associated with each heat transfer surface. It is used in several other places as a reference (e.g. as the base surface name for a Window or Door).

Field: Surface Type

Used primarily for convenience, the surface type can be one of the choices illustrated above – Wall, Floor, Ceiling, Roof. Azimuth (facing) and Tilt are determined from the vertex coordinates. Note that "normal" floors will be tilted 180° whereas flat roofs/ceilings will be tilted 0°. EnergyPlus uses this field's designation, along with the calculated tilt of the surface, to issue warning messages when tilts are "out of range". Calculations in EnergyPlus use the actual calculated tilt values for the actual heat balance calculations. Note, however, that a floor tilted 0° is really facing "into" the zone and is not what you will desire for the calculations even though the coordinate may appear correct in the viewed DXF display.

"Normal" tilt for walls is 90° -- here you may use the calculated Azimuth to make sure your walls are facing away from the zone's interior.

Field: Construction Name of Surface

This is the name of the construction (ref: CONSTRUCTION) used in the surface. Regardless of location in the building, the "full" construction (all layers) is used. For example, for an interior wall separating two zones, zone x would have the outside layer (e.g. drywall) as the material that shows in zone y and then the layers to the inside layer – the material that shows in zone x. For symmetric constructions, the same construction can be used in the surfaces described in both zones.

Field: Inside Face Environment

This is the zone name to which the surface belongs.

Field: Outside Face Environment

This value can be one of several things depending on the actual kind of surface.

1) OtherZoneSurface – if this surface is an internal surface, then this is the choice. The value will either be a surface in the base zone or a surface in another zone. The heat balance between two zones can be accurately simulated by specifying a surface in an adjacent zone. EnergyPlus will simulate a group of zones simultaneously and will include the heat transfer between zones. However, as this increases the complexity of the calculations, it is not necessary to specify the other zone unless the two zones will have a significant temperature difference. If the two zones will not be very different (temperature wise), then the surface should use itself as the outside environment. In either case, the surface name on the "outside" of this surface is placed in the next field.
2) ExteriorEnvironment – if this surface is exposed to outside temperature conditions, then this is the choice. See Sun Exposure and Wind Exposure below for further specifications on this kind of surface.
3) Ground – if this surface is exposed to the ground, then this is the choice. The temperature on the outside of this surface will be the Ground Temperature.
4) OtherSideCoeff – if this surface has a custom, user specified temperature or other parameters (See OtherSideCoefficient specification), then this is the choice. The outside face environment will be the name of the OtherSideCoefficient specification.

Field: Outside Face Environment Object

If neither OtherZoneSurface or OtherSideCoeff are specified for the Outside Face Environment (previous field), then this field should be left blank.

As stated above, if the Outside Face Environment is "OtherZoneSurface", then this field's value must be the surface name whose inside face temperature will be forced on the outside face of the base surface. This permits heat exchange between adjacent zones (interzone heat transfer) when multiple zones are simulated, but can also be used to simulate middle zone behavior without modeling the adjacent zones. This is done by specifying a surface within the zone. For example, a middle floor zone can be modeled by making the floor the Outside Face Environment Object for the ceiling, and the ceiling the Outside Face Environment Object for the floor.

Note: Zones with interzone heat transfer are not adiabatic and the internal surfaces contribute to gains or losses. Adiabatic surfaces are modeled by specifying the base surface itself in this field. Also, for interzone heat transfer, both surfaces must be represented – for example, if you want interzone heat transfer to an attic space, the ceiling in the lower zone must have a surface object with the outside face environment as the floor in the attic and, likewise, there must be a floor surface object in the attic that references the ceiling surface name in the lower zone.

Equally, if the Outside Face Environment, is “OtherSideCoeff”, then this field’s value must be the OtherSideCoefficient name.

Field: Sun Exposure

If the surface is exposed to the sun, then “SunExposed” should be entered in this field. Otherwise, “NoSun” should be entered.

Note, a cantilevered floor could have “ExteriorEnvironment” but “NoSun” exposure.

Field: Wind Exposure

If the surface is exposed to the Wind, then “WindExposed” should be entered in this field. Otherwise, “NoWind” should be entered.

Note: When a surface is specified with “NoWind”, this has several implications. Within the heat balance code, this surface will default to using the simple ASHRAE exterior convection coefficient correlation with a zero wind speed. In addition, since the ASHRAE simple method does not have a separate value for equivalent long wavelength radiation to the sky and ground, using “NoWind” also eliminates long wavelength radiant exchange from the exterior of the surface to both the sky and the ground. Thus, only simple convection takes place at the exterior face of a surface specified with “NoWind”.

Field: View Factor to Ground

The fraction of the ground plane (assumed horizontal) that is visible from a heat-transfer surface. It is used to calculate the diffuse solar radiation from the ground that is incident on the surface.

For example, if there are no obstructions, a vertical surface sees half of the ground plane and so View Factor to Ground = 0.5. A horizontal downward-facing surface sees the entire ground plane, so View Factor to Ground = 1.0. A horizontal upward-facing surface (horizontal roof) does not see the ground at all, so View Factor to Ground = 0.0.

You are responsible for entering the View Factor to Ground for each heat-transfer surface. Typical values for a surface that is not shadowed are obtained by the simple equation:

View Factor to Ground = (1-cos(SurfTilt))/2

For example, this gives 0.5 for a wall of tilt 90°. If the tilt of the wall changes, then the View Factor to Ground must also change.

Note 1: The corresponding view factor to the sky for diffuse solar radiation is not a user input; it is calculated within EnergyPlus based on surface orientation, sky solar radiance distribution, and shadowing surfaces.

Note 2: The view factors to the sky and ground for thermal IR (long-wave) radiation are not user inputs; they are calculated within EnergyPlus based on surface tilt and shadowing surfaces. Shadowing surfaces are considered to have the same emissivity and temperature as the ground, so they are lumped together with the ground in calculating the ground IR view factor.

Field: Number of Surface Vertice Groups

This field specifies the number of sides in the surface (number of X,Y,Z vertex groups). For further information, see the discussion on “Surface Vertices” above.

An IDF example of three walls (first is an exterior wall, second and third are interzone partitions):

```
Surface:HeatTransfer,Zn001:Wall001,  !- Base Surface Name
  Wall,EXTERIOR,  !- Class and Construction Name
  ZONE 1 @ 200 601 0 T,  !- Zone
  ExteriorEnvironment,,  !- Exterior Conditions and Target (if applicable)
   SunExposed,  !- Solar Exposure
   WindExposed,  !- Wind Exposure
  0.5000000    ,  !- VF to Ground
           4, !-Rectangle
  0.0000000E+00,  0.0000000E+00,   3.048000    ,
  0.0000000E+00,  0.0000000E+00,  0.0000000E+00,
   6.096000    ,  0.0000000E+00,  0.0000000E+00,
   6.096000    ,  0.0000000E+00,   3.048000    ;
Surface:HeatTransfer,Zn001:Wall006,  !- Base Surface Name
  Wall,INTERIOR,  !- Class and Construction Name
  HEARTLAND AREA,  !- Zone
  OtherZone,Zn004:Wall005,  !- Exterior Conditions and Target (if applicable)
   NoSun,  !- Solar Exposure
   NoWind,  !- Wind Exposure
  0.5000000    ,  !- VF to Ground
           4, !-Rectangle
   38.01000    ,   28.25000    ,   10.00000    ,
   38.01000    ,   28.25000    ,  0.0000000E+00,
   38.01000    ,   18.25000    ,  0.0000000E+00,
   38.01000    ,   18.25000    ,   10.00000    ;
 Surface:HeatTransfer,Zn001:Wall007,  !- Base Surface Name
  Wall,INTERIOR,  !- Class and Construction Name
  HEARTLAND AREA,  !- Zone
  OtherZone,Zn003:Wall006,  !- Exterior Conditions and Target (if applicable)
   NoSun,  !- Solar Exposure
   NoWind,  !- Wind Exposure
  0.5000000    ,  !- VF to Ground
           4, !-Rectangle
   58.01000    ,   18.25000    ,   10.00000    ,
   58.01000    ,   18.25000    ,  0.0000000E+00,
   58.01000    ,   28.25000    ,  0.0000000E+00,
   58.01000    ,   28.25000    ,   10.00000    ;
```

Surface:HeatTransfer:Sub

This surface class is used for subsurfaces, which can be of three different types: Windows, Doors and GlassDoors. A subsurface (such as a window) of a base surface (such as a wall) inherits several of the properties (such as Outside Face Environment, Sun Exposure, etc.) of the base surface. Windows and GlassDoors are considered to have one or more glass layers and so transmit solar radiation. Doors are considered to be opaque.

```
Surface:HeatTransfer:Sub,
       \min-fields 19
       \memo Used for windows, opaque doors and glass doors
  A1 , \field User Supplied Surface Name
       \type alpha
       \reference OutFaceEnvNames
       \reference SurfAndSubSurfNames
       \reference AllHeatTranSurfNames
       \reference AllHeatTranAngFacNames
  A2 , \field Surface Type
       \required-field
       \type choice
       \key WINDOW
       \key DOOR
       \key GLASSDOOR
  A3 , \field Construction Name of the Surface
       \required-field
       \note To be matched with a construction in this input file
       \type object-list
       \object-list ConstructionNames
```

```
A4 , \field Base Surface Name
     \required-field
     \type object-list
     \object-list SurfaceNames
A5,  \field OutsideFaceEnvironment Object
     \type object-list
     \object-list OutFaceEnvNames
     \note Used only if Base OutsideFaceEnvironment is OtherZone or OtherSideCoeff
     \note If OtherZone, specify name of corresponding subsurface in adjacent zone or
     \note specify current subsurface name for internal partition separating like zones
     \note If OtherSideCoeff, specify name of OtherSideCoefficients or leave blank to inherit
     \note Base Surface's OtherSide Coefficients
N1, \field View Factor to Ground
     \type real
     \note From the exterior of the surface
     \minimum 0.0
     \maximum 1.0
     \default 0
A6, \field Name of shading control
     \type object-list
     \object-list WindowShadeControlNames
     \note Used for windows and glass doors only
     \note If not specified, window or glass door has no shading (blind, roller shade, etc.)
A7, \field WindowFrameAndDivider Name
     \type object-list
     \object-list WindowFrameAndDividerNames
     \note Used only for exterior windows (rectangular) and glass doors.
     \note Unused for triangular windows.
     \note If not specified (blank), window or glass door has no frame or divider
     \note beam solar reflection from reveal surfaces.
N2 , \field Multiplier
     \note Used only for Surface Type = WINDOW or GLASSDOOR
     \note Non-integer values will be truncated to integer
     \default 1.0
     \minimum 1.0
N3 , \field Number of Surface Vertice Groups -- Number of (X,Y,Z) groups in this surface
     \required-field
     \note Must be 4 for Type = DOOR or GLASSDOOR
     \note Can be 3 or 4 for Type = WINDOW
     \minimum 3
     \maximum 4
     \note vertices are given in SurfaceGeometry coordinates -- if relative, all surface
     \note coordinates are “relative” to the Zone Origin.
     \note If WCS, then building and zone origins are used for some
     \note internal calculations, but all coordinates are given in an "absolute" system.
N4,  \field Vertex 1 X-coordinate
     \units m
     \type real
N5 , \field Vertex 1 Y-coordinate
     \units m
     \type real
N6 , \field Vertex 1 Z-coordinate
     \units m
     \type real
N7,  \field Vertex 2 X-coordinate
     \units m
     \type real
N8,  \field Vertex 2 Y-coordinate
     \units m
     \type real
N9,  \field Vertex 2 Z-coordinate
     \units m
     \type real
N10,  \field Vertex 3 X-coordinate
     \units m
     \type real
N11, \field Vertex 3 Y-coordinate
     \units m
     \type real
N12, \field Vertex 3 Z-coordinate
     \units m
```

```
      \type real
N13, \field Vertex 4 X-coordinate
      \units m
      \type real
      \note Not used for triangles
N14, \field Vertex 4 Y-coordinate
      \type real
      \units m
      \note Not used for triangles
N15; \field Vertex 4 Z-coordinate
      \units m
      \type real
      \note Not used for triangles
```

Field: User Supplied Surface Name

This is a unique character string associated with the heat transfer subsurface. It may be used in other places as a reference (e.g. as the opposing subsurface of an interzone window or door).

Field: Surface Type

The choices for Surface Type are Window, Door and GlassDoor. Doors are assumed to be opaque (do not transmit solar radiation) whereas Windows and GlassDoors do transmit solar radiation. Windows and Glass Doors are treated identically in the calculation of conduction heat transfer, solar gain, daylighting, etc., except that Windows can have multipliers but GlassDoors (and Doors) cannot. A Window or GlassDoor, but not a Door, can have a movable interior or exterior shading device, such as drapes or blinds (ref: WindowShadingControl), and can have a frame and/or a divider (ref: FrameAndDivider). In the following, the term "window" applies to both Window and GlassDoor if GlassDoor is not explicitly mentioned.

As noted in the description of the Surface:Heat Transfer, Azimuth (facing angle) and Tilt are calculated from the entered vertices. Tilts of subsurfaces will normally be the same as their base surface. If these are significantly beyond the "normals" for the base surface, warning messages may be issued. If the facing angles are not correct, you may have a window pointing "into" the zone rather than out of it – this would cause problems in the calculations.

Field: Construction Name of Surface

This is the name of the subsurface's construction (ref: Construction [for Window, GlassDoor and Door] and Construction from Window5 Data File [for Window and GlassDoor]).

For windows, if Construction Name is not found among the constructions on the input (.idf) file, the Window5 Data File (Window5DataFile.dat) will be searched for that Construction Name (see "Importing Windows from WINDOW 5"). If that file is not present or if the Construction Name does not match the name of an entry on the file, an error will result. If there is a match, a window construction and its corresponding glass and gas materials will be created from the information read from the file.

Field: Base Surface Name

This is the name of the Surface:HeatTransfer that contains this subsurface. Certain kinds of surfaces may not be allowed to have subsurfaces. For example, a surface in contact with the ground (Outside Face Environment = Ground) cannot contain a window.

Field: Outside Face Environment Object

If the base surface has Outside Face Environment = OtherZone or OtherSideCoeff, then this field must also be specified for the subsurface. Otherwise, it can be left blank.

If OutsideFaceEnvironment for the base surface is OtherZone, this field should specify the subsurface in the opposing zone that is the counterpart to this subsurface. The constructions of the subsurface and opposing subsurface must match, except that, for multi-layer constructions, the layer order of the opposing subsurface's construction must be the reverse of that of the subsurface.

If OutsideFaceEnvironment for the base surface is OtherSideCoeff, this field could specify the set of Other Side Coefficients for this subsurface. If this is left blank, then the Other Side Coefficients of the base surface will be used for this subsurface. *Windows and GlassDoorsare not allowed to have Other Side Coefficients.*

Field: View Factor to Ground

Same description as for the heat transfer base surfaces (ref: Surface:HeatTransfer).

Field: Name of Shading Control

This field, if not blank, is the name of the window shading control (ref: WindowShadingControl) for this subsurface. It is used for Surface Type = Window and GlassDoor, but not for Surface Type = Door.

Field: Window Frame and Divider Name

This field, if not blank, can be used to specify window frame, divider and reveal-surface data (ref: WindowFrameAndDivider). It is used only for exterior GlassDoors and rectangular exterior Windows, i.e., those with OutsideFaceEnvironment = ExteriorEnvironment.

This field should be blank for triangular windows.

Field: Multiplier

Used only for Surface Type = Window. It is the number of identical windows on a base surface. Using Multiplier can save input effort and calculation time. In the EnergyPlus calculation the window glazing area (and area of frame and divider, if present) is multiplied by Multiplier. The calculation of shadowing on the window (and the calculation of the interior distribution of beam solar radiation transmitted by the window) are done for the specified window position and dimensions.

Multiplier should be used with caution. Multiplier > 1 can give inaccurate or nonsensical results in situations where the results are sensitive to window position. This includes shadowing on the window, daylighting from the window, and interior distribution of solar radiation from the window. In these cases, the results for the single input window, after multiplication, may not be representative of the results you would get if you entered each of the multiple windows separately.

If Multiplier > 1, you will get

--a *warning* if Solar Distribution = FullExterior or FullInteriorAndExterior (ref: Building), indicating that the shadowing on the input window or the interior solar radiation distribution from the input window may not be representative of the actual group of windows. No warning is issued if Solar Distribution = MinimalShadowing.

--an *error* if the window is an exterior window in a zone that has a detailed daylighting calculation (Daylighting:Detailed specified for the zone). Since a single window with a multiplier can never give the same daylight illuminance as the actual set of windows, you are not allowed to use Multiplier in this situation.

Field: Number of Surface Vertices Groups

The number of sides the surface has (number of X,Y,Z vertex groups). For further information, see the discussion on "Surface Vertices" above. Door and GlassDoor

subsurfaces are rectangular and therefore have four vertices. Window subsurfaces can be rectangular or triangular and therefore have four or three vertices, respectively.

Fields: Subsurface Vertex Coordinates

This is a total of twelve fields giving the x,y,z coordinate values of the four vertices of rectangular subsurfaces [m], or a total of nine fields giving the x,y,z coordinate values of the three vertices of triangular windows.

For triangular windows the first vertex listed can be any of the three vertices, but the order of the vertices should be counter-clockwise if VertexEntry is CounterClockWise and clockwise if VertexEntry is ClockWise (ref: SurfaceGeometry).

An IDF example of a rectangular subsurface (Window):

```
Surface:HeatTransfer:Sub,Zn001:Wall001:Win001,  !- SubSurface Name
  Window,SINGLE PANE HW WINDOW,  !- Class and Construction Name
  Zn001:Wall001,,         !- Base Surface Name and Target (if applicable)
  0.5000000    ,          !- VF to Ground
  WINDOW-CONTROL-DRAPES,  !- Window Shading Control
  TestFrameAndDivider,    !- Frame/Divider name
  5,                      !- Multiplier
  4,                      !- Rectangle (number of sides)
   1.524000    ,  0.1520000    ,   2.743000    ,
   1.524000    ,  0.1520000    ,  0.3050000    ,
   4.572000    ,  0.1520000    ,  0.3050000    ,
   4.572000    ,  0.1520000    ,   2.743000    ;
```

Surface:HeatTransfer:InternalMass

Any surface that would logically be described as an interior wall, floor or ceiling can just as easily be described as Internal Mass. Internal Mass surface types only exchange energy with the zone in which they are described; they do not see any other zones. There are two approaches to using internal mass. The first approach is to have several pieces of internal mass with each piece having a different construction type. The other approach is to choose an average construction type and combine all of the interior surfaces into a single internal mass. Note that furniture and other large objects within a zone can be described using internal mass. However, simplifying calculations using internal mass must be used with caution when the “FullExteriorandInterior” Solar Distribution model (see BUILDING parameters) is chosen.

Example

When zoning an office building, five west-facing offices have been combined into one zone. All of the offices have interior walls made of the same materials. As shown in the figure below, this zone may be described with 5 exterior walls and 11 internal walls or 1 exterior wall and 1 internal mass. Note that fewer surfaces will speed up the EnergyPlus calculations.

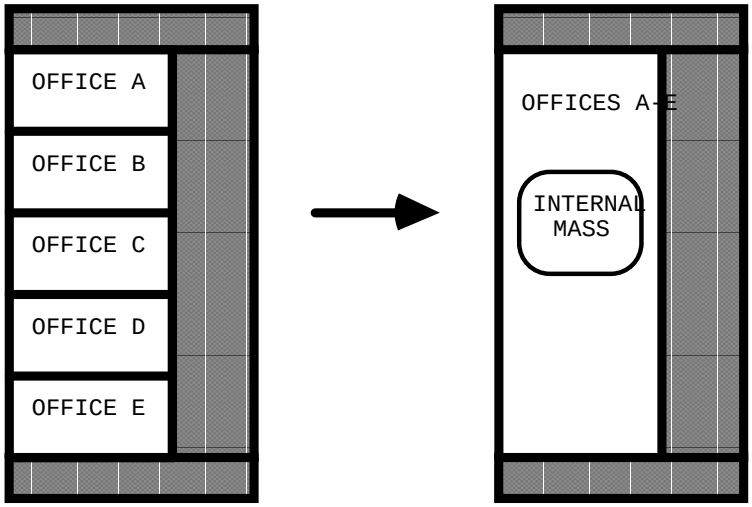

Figure 13. Representing 11 internal walls as internal mass

Example

A five-story building has the same ceiling/floor construction separating each of the levels. Zones that are on floors 2 through 4 may be described using a single piece of internal mass to represent both the floor and ceiling. The construction for this internal mass would be identical to the ceiling/floor construction that would be used to describe separate surfaces.

```
Surface:HeatTransfer:InternalMass,
       \memo Used to describe internal zone surface area that does not need to be part of geometric
representation.
       \memo This should be the total surface area exposed to the zone air.
  A1 , \field User Supplied Surface Name
       \type alpha
       \reference SurfaceNames
  A2 , \field Construction Name of the Surface
       \note To be matched with a construction in this input file
       \type object-list
       \object-list ConstructionNames
  A3 , \field Interior Environment
       \note Zone the surface is a part of
       \type object-list
       \object-list ZoneNames
  N1 ; \field Surface area
       \units m2
```

Field: User Supplied Surface Name

This is a unique character string associated with the internal mass surface. Though it must be unique from other surface names, it is used primarily for convenience with internal mass surfaces.

Field: Construction Name of Surface

This is the name of the construction (ref: CONSTRUCTION) used in the surface.

Field: Interior Environment

This is the name of the zone in which the internal mass is represented.

Field: Surface Area

This field is the surface area of the internal mass. The area that is specified must be the entire surface area that is exposed to the zone. If both sides of a wall are completely within

the same zone, then the area of both sides must be included when describing that internal wall.

IDF examples of Internal Mass surfaces:

```
Surface:HeatTransfer:InternalMass,Zn002:IntM001,  !- Surface Name
  INTERIOR,  !- Construction Name
  DORM ROOMS AND COMMON AREAS,  !- Zone
   408.7734    ;  !- Total area exposed to Zone {m2}
 Surface:HeatTransfer:InternalMass,Zn002:IntM002,  !- Surface Name
  PARTITION02,  !- Construction Name
  DORM ROOMS AND COMMON AREAS,  !- Zone
   371.6122    ;  !- Total area exposed to Zone {m2}
```

Surface Output Variables/Reports

Output variables applicable to all heat transfer surfaces:

```
Zone,Average,Surface Ext Sunlit Area [m2]
Zone,Average,Surface Ext Sunlit Fraction []
Zone,Average,Surface Ext Solar Incident[W/m2]
Zone,Average,Surface Ext Solar Beam Incident[W/m2]
Zone,Average,Surface Ext Solar Sky Diffuse Incident[W/m2]
Zone,Average,Surface Ext Solar Ground Diffuse Incident[W/m2]
Zone,Average,Surface Ext Solar Beam Cosine Of Incidence Angle[]
Zone,Average,Surface Inside Temperature[C]
Zone,Average,Surface Outside Temperature[C]
Zone,Average,Surface Int Convection Coeff[W/m2-K]
Zone,Average,Surface Ext Convection Coeff[W/m2-K]
```

Output variables applicable to opaque heat transfer surfaces (FLOOR, WALL, ROOF, DOOR):

```
Zone,Average,Opaque Surface Inside Face Conduction[W]
Zone,Average,Opaque Surface Inside Face Conduction Gain[W]
Zone,Average,Opaque Surface Inside Face Conduction Loss[W]
Zone,Average,Zone Opaque Surface Inside Face Conduction Gain[W]
Zone,Average,Zone Opaque Surface Inside Face Conduction Loss[W]
Zone,Average,Opaque Surface Inside Face Beam Solar Absorbed[W]
```

Output variables applicable only to exterior windows and glass doors:

```
Zone,Average,Zone Transmitted Solar[W]
Zone,Average,Zone Window Heat Gain[W]
Zone,Average,Zone Window Heat Loss[W]
Zone,Average,Window Solar Absorbed:All Glass Layers[W]
Zone,Average,Window Solar Absorbed:Shading Device[W]
Zone,Average,Window Transmitted Solar[W]
Zone,Average,Window System Solar Transmittance[]
Zone,Average,Window System Solar Absorptance[]
Zone,Average,Window System Solar Reflectance[]
Zone,Average,Window Heat Gain[W]
Zone,Average,Window Heat Loss[W]
Zone,Average,Glass Beam-Beam Solar Transmittance[]
Zone,Average,Glass Diffuse-Diffuse Solar Transmittance[]
Zone,Average,Solar Horizontal Profile Angle[degree]
Zone,Average,Solar Vertical Profile Angle[degree]
Zone,Average,Beam Solar Reflected by Outside Reveal Surfaces[W]
Zone,Average,Beam Solar Reflected by Inside Reveal Surfaces[W]
Zone,Average,Inside Glass Condensation Flag[]
Zone,Average,Inside Frame Condensation Flag[]
Zone,Average,Inside Divider Condensation Flag[]
Zone,Average,Fraction of Time Shading Device Is On[]
Zone,Average,Window Blind Slat Angle [deg]
Zone,Average,Blind Beam-Beam Solar Transmittance[]
Zone,Average,Blind Beam-Diffuse Solar Transmittance[]
```

```
Zone,Average,Blind Diffuse-Diffuse Solar Transmittance[]
Zone,Average,Blind/Glass System Beam-Beam Solar Transmittance[]
Zone,Average,Blind/Glass System Diffuse-Diffuse Solar Transmittance[]
```

Surface Output Variables (all surfaces)

Surface Ext Sunlit Area [m2]

The outside area of an exterior surface that is illuminated by direct solar radiation.

Surface Ext Sunlit Fraction []

The fraction of the outside area of an exterior surfrace that is illuminated by direct solar radiation. Equals Surface Ext Sunlit Area divided by total surface area.

Surface Ext Solar Incident [W/m2]

The total solar radiation incident on the outside of an exterior surface. It is the sum of Surface Ext Solar Beam Incident, Surface Ext Solar Sky Diffuse Incident, and Surface Ext Solar Ground Diffuse Incident.

Surface Ext Solar Beam Incident [W/m2]

The solar beam radiation incident on the outside of an exterior surface, including the effects of shadowing, if present.

Surface Ext Solar Sky Diffuse Incident [W/m2]

The solar diffuse radiation from the sky incident on the outside of an exterior surface, including the effects of shadowing, if present.

Surface Ext Solar Ground Diffuse Incident [W/m2]

The solar diffuse radiation from the ground incident on the outside of an exterior surface, including the effect of the user-specified ground view factor.

Surface Ext Solar Beam Cosine Of Incidence Angle []

The cosine of the angle of incidence of beam solar radiation on the outside of an exterior surface. The incidence angle ranges from 0° (cosine = 1.0) for beam perpendicular to surface to 90° (cosine = 0) for beam parallel to surface.

Surface Inside Temperature [C]

The inside surface temperature of a heat transfer surface.

Surface Outside Temperature [C]

The outside surface temperature of a heat transfer surface.

Surface Int Convection Coeff [W/m2-K]

The inside air film convective conductance for a heat transfer surface.

Surface Ext Convection Coeff [W/m2-K]

The outside air film convective conductance for a heat transfer surface.

Opaque Surface Output Variables

The following variables apply only to opaque surfaces, where an opaque surface is considered here to be an exterior or interzone heat transfer surface of class FLOOR, WALL, ROOF or DOOR.

Opaque Surface Inside Face Conduction [W]

The heat flow by conduction at the inside face of an opaque heat transfer surface. A positive value means that the conduction is out of the surface and into the zone. A negative value means that the conduction is from the zone and into the surface.

Opaque Surface Inside Face Conduction Gain [W]

The Opaque Surface Inside Face Conduction when that conduction is positive (into the zone).

Opaque Surface Inside Face Conduction Loss [W]

The absolute value of the Opaque Surface Inside Face Conduction when that conduction is negative (into the surface).

Zone Opaque Surface Inside Face Conduction Gain [W]

The sum of the Opaque Surface Inside Face Conduction values for all opaque surfaces in a zone when that sum is positive (which means it is a net conduction heat gain to the zone). For example, assume a zone has six opaque surfaces with Opaque Surface Inside Face Conduction values of 100, -200, 400, 50, 150 and -300. Then Zone Opaque Surface Inside Face Conduction Gain = 700 - 500 = 200 W.

Zone Opaque Surface Inside Face Conduction Loss [W]

The absolute value of the sum of the Opaque Surface Inside Face Conduction values for all opaque surfaces in a zone when that sum is negative (which means it is a net conduction heat loss from the zone). For example, assume a zone has six opaque surfaces with Opaque Surface Inside Face Conduction values of -100, -200, 400, -50, 150 and -300. Then Zone Opaque Surface Inside Face Conduction Loss = |550 – 650| = |-100| = 100 W.

Opaque Surface Inside Face Beam Solar Absorbed [W]

Beam solar radiation from exterior windows absorbed on the inside face of an opaque heat transfer surface. For Solar Distribution = FullInteriorAndExterior, this quantity can be non-zero for both floor and wall surfaces. Otherwise, for Solar Distribution = FullExterior or MinimalShadowing, it can be non-zero only for floor surfaces since in this case all entering beam solar is assumed to fall on the floor. Note that this variable will not be operational (have a real value) unless there are exterior windows in the zone.

Window Output Variables

The following output variables apply to subsurfaces that are windows or glass doors. These two subsurface types are called “window” here. “Shading device” means an interior or exterior shade or blind.

Zone Transmitted Solar [W]

The total Window Transmitted Solar of all the exterior windows in a zone.

Zone Window Heat Gain [W]

The sum of the heat flow from all of the exterior windows in a zone when that sum is positive. (See definition of “heat flow” under “Window Heat Gain,” below.)

Zone Window Heat Loss [W]

The absolute value of the sum of the heat flow from all of the exterior windows in a zone when that sum is negative.

Window Solar Absorbed: All Glass Layers [W]

The total exterior beam and diffuse solar radiation absorbed in all of the glass layers of a window.

Window Solar Absorbed: Shading Device[W]

The exterior beam and diffuse solar radiation absorbed in the shading device, if present.

Window Transmitted Solar [W]

The total exterior beam and diffuse solar radiation transmitted through the glazing (and shading device, if present) of an exterior window.

Window System Solar Transmittance []

Effective solar transmittance of the window, including effect of shading device, if present. Equal to “Window Transmitted Solar” divided by total exterior beam plus diffuse solar radiation incident on the window (excluding frame, if present).

Window System Solar Absorptance []

Effective solar absorptance of the window, including effect of shading device, if present. Equal to “Window Solar Absorbed: All Glass Layers” plus “Window Solar Absorbed: Shading Device” divided by total exterior beam plus diffuse solar radiation incident on window (excluding frame, if present)

Window System Solar Reflectance []

Effective solar reflectance of the window, including effect of shading device, if present. Equal to: [1.0 – “Window System Solar Transmittance” – “Window System Solar Absorptance”].

Window Heat Gain [W]

The total heat flow to the zone from the glazing, frame and divider of an exterior window when the total heat flow is positive.

For a window *without an interior shading device*, this heat flow is equal to:

[Window transmitted solar (see definition, above)]
+ [Convective heat flow to the zone from the zone side of the glazing]
+ [Net IR heat flow to the zone from zone side of the glazing]
– [Short-wave radiation from zone transmitted back out the window]
+ [Conduction to zone from window frame and divider, if present]

Here, short-wave radiation is that from lights and diffuse interior solar radiation.

For a window *with an interior shading device*, this heat flow is equal to:

[Window transmitted solar]
+ [Convective heat flow to the zone from the air flowing through the gap between glazing and shading device]

+ [Convective heat flow to the zone from the zone side of the shading device]
+ [Net IR heat flow to the zone from the zone side of the glazing]
+ [Net IR heat flow to the zone from the zone side of the shading device]
– [Short-wave radiation from zone transmitted back out the window]
+ [Conduction to zone from window frame and divider, if present]

The total window heat flow can also be thought of as the sum of the solar and conductive gain from the window glazing. Note that Window Heat Gain does not include the heat gain from window frame and divider, if present.

Window Heat Loss [W]

The absolute value of the total heat flow through a window when the total heat flow is negative. (See definition of "total heat flow" under "Window Heat Gain," above.)

Glass Beam-Beam Solar Transmittance []

The fraction of exterior beam solar radiation incident on the window glass that is transmitted through the glass assuming that the window has no shading device. Takes into account the angle of incidence of beam solar radiation on the glass. Currently, all glass is considered to be transparent, so that incident beam solar is transmitted only as beam solar with no diffuse solar component.

Glass Diffuse-Diffuse Solar Transmittance []

The fraction of exterior diffuse solar radiation incident on the window glass that is transmitted through the glass assuming that the window has no shading device. It is assumed that incident diffuse solar is transmitted only as diffuse with no beam component.

Solar Horizontal Profile Angle [degrees]

For a vertical window, this is an angle appropriate for calculating beam solar quantities appropriate to horizontal window elements such as horizontal reveal surfaces, horizontal frame and divider elements and horizontal slats of window blinds. It is defined as the angle between the window outward normal and the projection of the sun's ray on the vertical plane containing the outward normal. See Figure 14.

For a window of arbitrary tilt, it is defined as the angle between the window outward normal the projection of the sun's ray on the plane that contains the outward normal and is perpendicular to the ground.

If the sun is behind the window, the horizontal profile angle is not defined and is reported as 0.0.

Note that in most texts what we call "horizontal profile angle" is called "vertical profile angle."

Solar Vertical Profile Angle [degrees]

For a vertical window, this is an angle appropriate for calculating beam solar quantities appropriate to vertical window elements such as vertical reveal surfaces, vertical frame and divider elements and vertical slats of window blinds. It is defined as the angle between the window outward normal and the projection of the sun's ray on the horizontal plane containing the outward normal. See **Figure 14.**

For a window of arbitrary tilt, it is defined as the angle between the window outward normal the projection of the sun's ray on the plane that contains the outward normal and is perpendicular to the plane defined above for Solar Horizontal Profile Angle for a window of arbitrary tilt.

If the sun is behind the window, the vertical profile angle is not defined and is reported as 0.0.

Note that in most texts what we call “vertical profile angle” is called “horizontal profile angle.”

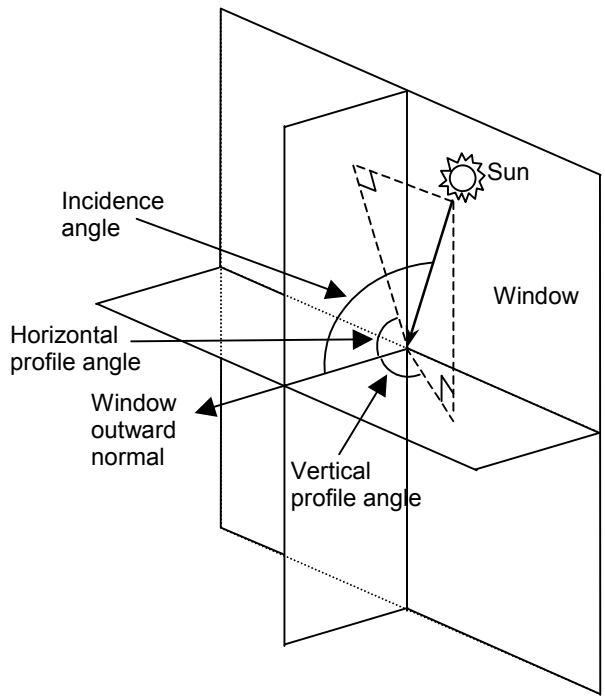

Figure 14. Vertical window showing solar horizontal profile angle, solar vertical profile angle and solar incidence angle.

Beam Solar Reflected by Outside Reveal Surfaces [W]

Beam solar radiation reflected from the outside reveal surfaces of a window (ref: Reveal Surfaces under WindowFrameAndDivider).

Beam Solar Reflected by Inside Reveal Surfaces [W]

Beam solar radiation reflected from the inside reveal surfaces of a window (ref: Reveal Surfaces under WindowFrameAndDivider).

Inside Glass Condensation Flag []

If the value is 1, condensation will occur on the inside of the innermost glass surface of a window. Otherwise the value is 0. The condition for condensation is glass inside surface temperature < zone air dew point temperature.

Inside Frame Condensation Flag []

If the window has a frame and the value of this flag is 1, condensation will occur on the inside surface of the frame. The condition for condensation is frame inside surface temperature < zone air dew point temperature.

Inside Divider Condensation Flag []

If the window has a divider and the value of this flag is 1, condensation will occur on the inside surface of the divider. The condition for condensation is divider inside surface temperature < zone air dew point temperature.

Fraction of Time Shading Device Is On []

The fraction of time that a shading device is on. For a particular simulation time step, the value is 0.0 if the shading device is off (or there is no shading device) and the value is 1.0 if the shading device is on. (It is assumed that the shading device, if present, is either on or off for the entire time step.) If the shading device is switchable glazing, a value of 0.0 means that the glazing is in the unswitched (light colored) state, and a value of 1.0 means that the glazing is in the switched (dark colored) state.

For a time interval longer a time step, this is the fraction of the time interval that the shading device is on. For example, take the case where the time interval is one hour and the time step is 10 minutes. Then if the shading device is on for two time steps in the hour and off for the other four time steps, then the fraction of time that the shading device is on = 2/6 = 0.3333.

Window Blind Slat Angle [deg]

The angle in degrees between the glazing outward normal and the slat angle outward normal, where the outward normal points away from the front face of the slat. The slat angle varies from 0 to 180 deg. If the slat angle is 0 deg or 180 deg, the slats are parallel to the glazing and the slats are said to be “closed”. If the slat angle is 90 deg, the slats are perpendicular to the glazing and the slats are said to be “fully open”. See illustrations under Material:WindowBlind. For blinds with a fixed slat angle, the value reported here will be constant.

Blind Beam-Beam Solar Transmittance []

The fraction of exterior beam solar radiation incident on the blind that is transmitted through the blind as beam solar radiation in the case that the blind is isolated (i.e., as though the window glass were not present). Depends on various factors, including slat angle, width, separation, and thickness, and horizontal solar profile angle (for blinds with horizontal slats) or vertical solar profile angle (for blinds with vertical slats). The transmittance value reported here will be non-zero only when some beam solar can pass through the blind without hitting the slats.

Blind Beam-Diffuse Solar Transmittance []

The fraction of exterior beam solar radiation incident on the blind that is transmitted through the blind as diffuse solar radiation in the case that the blind is isolated (i.e., as though the window glass were not present). Depends on various factors, including slat angle, width, separation, thickness and reflectance, and horizontal solar profile angle (for blinds with horizontal slats) or vertical solar profile angle (for blinds with vertical slats).

Blind Diffuse-Diffuse Solar Transmittance []

The fraction of exterior diffuse solar radiation incident on the blind that is transmitted through the blind as diffuse solar radiation in the case that the blind is isolated (i.e., as though the window glass were not present). Depends on various factors, including slat angle, width, separation, thickness and reflectance. For blinds with a fixed slat angle the transmittance value reported here will be constant.

Blind/Glass System Beam-Beam Solar Transmittance []

The fraction of exterior beam solar radiation incident on a window with a blind (excluding window frame, if present) that is transmitted through the blind/glass system as beam solar radiation. Depends on various factors, including type of glass; solar incidence angle; slat angle, width, separation, and thickness; and horizontal solar profile angle (for blinds with horizontal slats) or vertical solar profile angle (for blinds with vertical slats).

Blind/Glass System Diffuse-Diffuse Solar Transmittance []

The fraction of exterior diffuse solar radiation incident on a window with a blind (excluding window frame, if present) that is transmitted through the blind/glass system as diffuse solar radiation. Depends on various factors, including type of glass and slat angle, width, separation, thickness and reflectance. For blinds with a fixed slat angle the transmittance value reported here will be constant.

Other Surface Reports

Several reports can be selected for Surfaces. (See Group – Reports for details on how to specify). Examples are:

DXF

This report produces a special file (**eplusout.dxf**) in the industry standard DXF (Drawing Interchange Format) for drawings. It is produced and accepted by many popular, commercial CAD programs. Detailed reference can be found on the AutoCAD™ website at: http://www.autodesk.com/techpubs/autocad/acadr14/dxf/index.htm

EnergyPlus produces this file from the Report command:

```
Report, Surfaces, DXF;
```

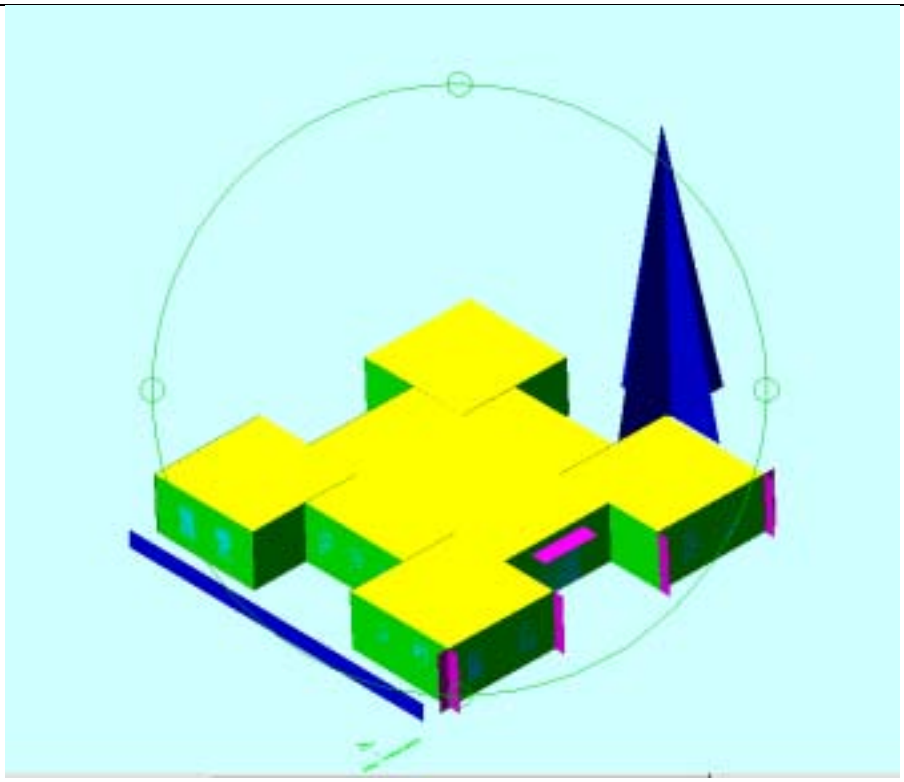

Figure 15. Example of a DXF drawing view

Details, Vertices, DetailsWithVertices

This version of the report creates lines in the eplusout.eio file for each surface (except internal mass surfaces).

```
<Zone Name>/#Shading Surfaces,# Surfaces, Vertices are shown starting at Upper-Left-Corner => Counter-
Clockwise => World Coordinates
<Surface Name>,<Surface Class>,<Base Surface>,<Construction>,Nominal U (w/o film coef),Area
(Net),Azimuth,Tilt,~Width,~Height,Reveal,<ExtBoundCondition>,<SunExposure>,<WindExposure>,ViewFactorToGrou
nd,ViewFactorToSky,ViewFactorToGround-IR,ViewFactorToSky-IR,#Sides,{Vertex 1},,,{Vertex 2},,,{Vertex
3},,,{Vertex 4},,,{etc}
,,,,{W/m2-K},{m2},{deg},{deg},{m},{m},{m},,,,,,,,,X {m},Y {m},Z {m},X {m},Y {m},Z {m},X {m},Y {m},Z {m},X
{m},Y {m},Z {m}
Number of Shading Surfaces,10
WEST SIDE BUSHES,DETACHED,,,,180.00000,90.0,90.0,60.00,3.00,,,,,,,,,4,-5.00,0.00,3.00,-5.00,0.00,0.00,-
5.00,60.00,0.00,-5.00,60.00,3.00
EAST SIDE
TREE1,DETACHED,,,,500.00000,270.0,90.0,20.00,50.99,,,,,,,,,3,70.00,30.00,50.00,70.00,40.00,0.00,70.00,20.0
0,0.00
EAST SIDE
TREE2,DETACHED,,,,500.00000,0.0,90.0,20.00,50.99,,,,,,,,,3,70.00,30.00,50.00,80.00,30.00,0.00,60.00,30.00,
0.00
ZN001:WALL001:SHADE001,SHADING,ZN001:WALL001,,,30.00000,180.0,180.0,10.00,3.00,,,,,,,,,4,25.00,7.00,8.50,2
5.00,10.00,8.50,35.00,10.00,8.50,35.00,7.00,8.50
ZN003:WALL001:SHADE001,SHADING,ZN003:WALL001,,,20.00000,270.0,90.0,2.00,10.00,,,,,,,,,4,40.00,0.00,10.00,4
0.00,0.00,0.00,40.00,-2.00,0.00,40.00,-2.00,10.00
HEARTLAND AREA,   35
ZN001:WALL001,WALL,,EXTERIOR,0.64,136.00000,180.0,90.0,20.00,10.00,0.00,ExternalEnvironment,SunExposed,Win
dExposed,0.50,0.50,0.50,0.50,4,20.00,10.00,10.00,20.00,10.00,0.00,40.00,10.00,0.00,40.00,10.00,10.00
ZN001:WALL001:WIN001,WINDOW,ZN001:WALL001,SINGLEPANEHWWINDOW,6.12,64.00000,180.0,90.0,8.00,8.00,0.00,Exter
nalEnvironment,SunExposed,WindExposed,0.50,0.50,0.50,0.50,4,26.00,10.00,8.10,26.00,10.00,0.10,34.00,10.00,
0.10,34.00,10.00,8.10
```

The above excerpt from the **eplusout.eio** file can easily be cut from the rest of the file and put into a spreadsheet program by itself or, since eplusout.eio obeys comma-delimited file rules, can be used as a part of the rest of eplusout.eio contents. More details about this report are contained in the Output Details and Examples document.

Shading Surfaces

Shading surfaces are used to describe entities in the near building environment that may cast shadows on the building's surfaces. These entities do not typically have enough thermal mass to be described as part of the building's thermal makeup. Two kinds of shading surfaces are described: detached and attached. Detached shading surfaces are items external to the building and may be fixed in space or may move with the building when relative coordinates are described. Attached shading surfaces are typically known as overhangs, left and right fins that usually shade windows.

Beginning with V1.0.2, EnergyPlus creates "bi-directional" shades from each shading device entered. This will provide more complete coverage for the individual shading devices.

Surface:Shading:Detached, Surface:Shading:Detached:Fixed, Surface:Shading:Detached:Building

Detached shading surfaces are used to describe items external to the building being simulated. Shading algorithms within EnergyPlus will account for buildings that are "self-shading" (buildings which have surfaces that shade other parts of the building) so you only need describe elements that aren't part of the building's geometry.

A detached shading device casts a shadow only in the hemisphere toward which it faces. This hemisphere is pointed to by the shading surface's outward normal vector, which is the cross product V23 x V21, where V23 is the vector from vertex 2 to vertex 3 and V21 is the vector from vertex 2 to vertex 1. Beginning with V1.0.2, the "bi-directional" shades in EnergyPlus will cast shadows in both hemispheres.

While "detached" implies that shading surfaces are not part of the building, the detached shading sequence can be used to describe attached shading surfaces which may shade more than one zone. For example, one wing of a building might shade several zones of

another wing but this wing (for whatever reason) is not being described in the geometry for the simulation.

Detached shading surfaces will also automatically shade diffuse solar radiation from the sky (and long-wave radiation from the sky). However, they will not shade diffuse radiation from the ground unless you enter a reduced value for View Factor to Ground for those building surfaces that are shaded.

Note that currently all shading surfaces are assumed to have zero reflectance so they do not reflect direct or diffuse solar back onto to the building—they only block this radiation.

Surface:Shading:Detached and Surface:Shading:Detached:Fixed are synonymous

```
Surface:Shading:Detached,
       \memo used for shading elements such as trees, other buildings, parts of this building that are not
being simulated.
  A1 , \field User Supplied Surface Name
       \required-field
       \type alpha
  A2,  \field TransSchedShadowSurf
       \note Transmittance schedule for the shading device, defaults to zero (always opaque)
       \type object-list
       \object-list ScheduleNames
  N1 , \field Number of Surface Vertice Groups -- Number of (X,Y,Z) groups in this surface
       \required-field

Surface:Shading:Detached:Fixed,
       \memo used for shading elements such as trees, other buildings, parts of this building that are not
being simulated.
  A1 , \field User Supplied Surface Name
       \required-field
       \type alpha
  A2,  \field TransSchedShadowSurf
       \note Transmittance schedule for the shading device, defaults to zero (always opaque)
       \type object-list
       \object-list ScheduleNames
  N1 , \field Number of Surface Vertice Groups -- Number of (X,Y,Z) groups in this surface
       \required-field

Surface:Shading:Detached:Building,
       \memo used for shading elements such as trees, other buildings, parts of this building not being
modeled
       \memo these items are relative to the current building and would move with relative geometry
  A1 , \field User Supplied Surface Name
       \required-field
       \type alpha
  A2,  \field TransSchedShadowSurf
       \note Transmittance schedule for the shading device, defaults to zero (always opaque)
       \type object-list
       \object-list ScheduleNames
  N1 , \field Number of Surface Vertice Groups -- Number of (X,Y,Z) groups in this surface
```

Field: User Supplied Surface Name

This is a unique character string associated with the detached shading surface. Though it must be unique from other surface names, it is used primarily for convenience with detached shading surfaces.

Field: TransSchedShadowSurf

This field supplies the “schedule” of transmittance for the shading surface. The final value should be a fractional transmittance (from 0.0 to 1.0) for the surface. The default value, if a blank is entered in this field, is 0.0 – opaque. This scheduling can be used to allow for seasonal shading values such as deciduous trees. Though unlikely, transmittance based on times of day can also be used. Note that shading devices only shade during hours when the

sun is up – this is automatically done by EnergyPlus. The user need only account for transmittance of the shading device.

Field: Number of Surface Vertice Groups

This field specifies the number of sides in the surface (number of X,Y,Z vertex groups). For further information, see the discussion on "Surface Vertices" above.

IDF example of Detached Shading Surfaces:

```
Surface:Shading:Detached,EAST SIDE TREE,  !- Detached Shading
   ShadingTransmittance:0002,  !- Shadowing Transmittance & Schedule
           3, !-Triangle
   33.52800    ,   10.66800    ,   10.05800    ,
   33.52800    ,   13.71600    ,  0.9140000    ,
   33.52800    ,   4.572000    ,  0.9140000    ;
 Surface:Shading:Detached,WEST SIDE TREE,  !- Detached Shading
   ShadingTransmittance:0002,  !- Shadowing Transmittance & Schedule
           3, !-Triangle
  -3.048000    ,   7.620000    ,   10.05800    ,
  -3.048000    ,   4.572000    ,  0.9140000    ,
  -3.048000    ,   13.71600    ,  0.9140000    ;
```

Surface:Shading:Attached

This class is used to describe attached "subsurfaces" which project outward from a surface. This classification is used for convenience – actually these devices with cast shadows wherever the actual shadows are cast and thus a fin may shade more than one wall. These attached subsurfaces are commonly called overhangs, wings or fins. Again, the sun casts a shadow when it is behind the attached shading device.

One zone surface can cast a shadow(s) on another zone surface(s). However, users need not worry about the effects of one wall shading another (e.g., an L-shaped zone). EnergyPlus will automatically check for possible shadowing and perform the proper calculations. In addition, since surfaces can only cast shadows in the hemisphere towards which they face, a roof or ceiling which faces *upward* will not cast a shadow *downward*. (Thus, specifying an oversized roof in an attempt to account for the shading effects of overhangs will *not* work). Interior surfaces do not cast shadows of any kind.

Note that these attached shading devices currently only shade in one direction; however, the program will create more surfaces so that bi-directional effects of shading are realized. Therefore, when a device exists (a fin) somewhere between the two ends of a surface, the program will automatically specify two attached shading devices so that shading can take place both to the left and right of the fin.

```
Surface:Shading:Attached,
       \memo used For fins, overhangs, elements that shade the building, are attached to the building
       \memo but are not part of the heat transfer calculations
  A1 , \field User Supplied Surface Name
       \type alpha
  A2 , \field Base Surface Name
       \type object-list
       \object-list SurfaceNames
  A3,  \field TransSchedShadowSurf
       \note Transmittance schedule for the shading device
       \type object-list
       \object-list ScheduleNames
  N2 , \field Number of Surface Vertice Groups -- Number of (X,Y,Z) groups in this surface
```

Field: User Supplied Surface Name

This is a unique character string associated with the attached shading surface. Though it must be unique from other surface names, it is used primarily for convenience with attached shading surfaces.

Field: Base Surface Name

This is the Surface name of the surface on which this shading surface resides (wall but not window, door).

Field: TransSchedShadowSurf

This field supplies the "schedule" of transmittance for the shading surface. The final value should be a fractional transmittance (from 0.0 to 1.0) for the surface. The default value, if a blank is entered in this field, is 0.0 – opaque. This scheduling can be used to allow for a seasonal change of transmittance in the device. Though unlikely, transmittance based on times of day can also be used. Note that shading devices only shade during hours when the sun is up – this is automatically done by EnergyPlus. The user need only account for transmittance of the shading device.

Field: Number of Surface Vertice Groups

This field specifies the number of sides in the surface (number of X,Y,Z vertex groups). For further information, see the discussion on "Surface Vertices" above. The example below will illustrate the correct input for an overhang (to shade the appropriate portion of the surface and window).

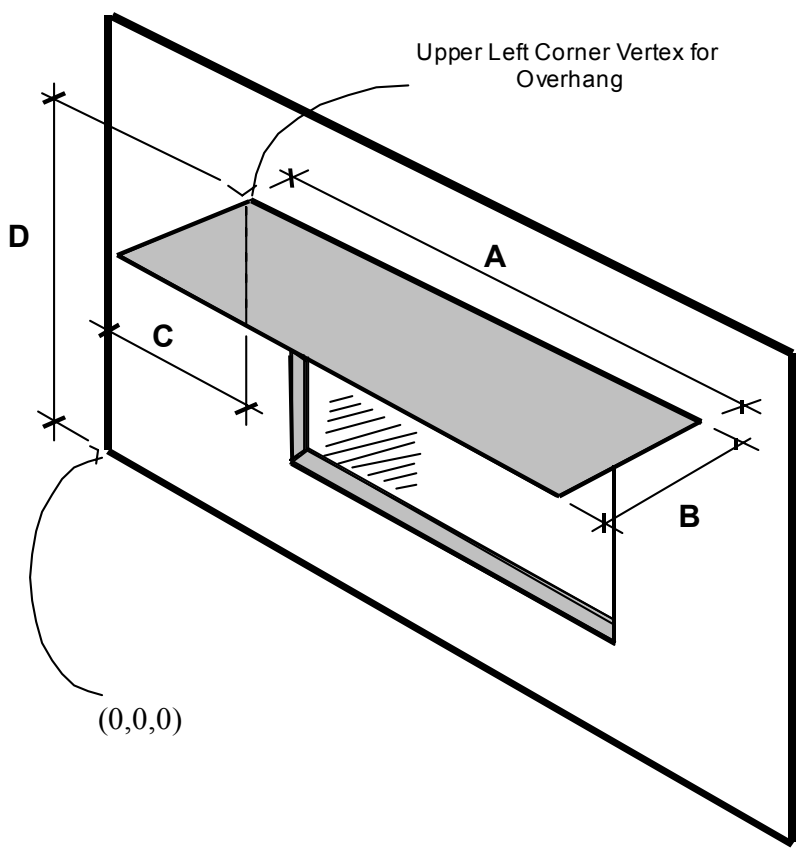

Figure 16. Illustration for Attached Shading Surface

Proper specification for this overhang is:

4,(C,-B,D),(C,0,D),(C+A,0,D),(C+A,-B,D); ( ) used to illustrate each vertex.

IDF example of attached shading surfaces (overhang, fin):

```
Surface:Shading:Attached,Zn001:Wall001:Shade001,  !- Surface Name
  Zn001:Wall001,  !- Base Surface Name
   ShadingTransmittance:0001,  !- Shadowing Transmittance & Schedule
           4, !-RectangularOverhang
   1.524000    , -0.3050000    ,   2.865000    ,
   1.524000    ,  0.0000000E+00,   2.865000    ,
   4.572000    ,  0.0000000E+00,   2.865000    ,
   4.572000    , -0.3050000    ,   2.865000    ;
Surface:Shading:Attached,Zn003:Wall001:Shade001,  !- Surface Name
  Zn003:Wall001,  !- Base Surface Name
   ShadingTransmittance:0001,  !- Shadowing Transmittance & Schedule
           4, !-RectangularLeftFin
   57.97000    ,   8.450000    ,   10.00000    ,
   57.97000    ,   8.450000    ,  0.0000000E+00,
   57.97000    ,   6.450000    ,  0.0000000E+00,
   57.97000    ,   6.450000    ,   10.00000    ;
 Surface:Shading:Attached,Zn003:Wall001:Shade002,  !- Surface Name
  Zn003:Wall001,  !- Base Surface Name
   ShadingTransmittance:0003,  !- Shadowing Transmittance & Schedule
           4, !-RectangularRightFin
   77.97000    ,   6.450000    ,   10.00000    ,
   77.97000    ,   6.450000    ,  0.0000000E+00,
   77.97000    ,   8.450000    ,  0.0000000E+00,
   77.97000    ,   8.450000    ,   10.00000    ;
```

WindowShadingControl

Window shading with coverings like drapes, blinds or pull-down shades can be used to reduce the amount of solar radiation entering the window or reduce daylighting glare. It can also be used to reduce heat loss through the window (movable insulation). Leaving the window covering open in the winter can maximize solar heat gain and thereby reduce heating loads.

With WindowShadingControl, which is referenced by windows and glass doors (ref: Surface:HeatTransfer:Sub with Type = Window or GlassDoor) you specify the type and location of the shading device, what variable or combination of variables controls deployment of the shading device, and what the control setpoint is. If the shading device is a blind, you also specify how the slat angle is controlled.

There are two ways of specifying the actual shading device:

Specify "Name of Construction with Shading"

This is the name of a window Construction that has the shading device as one of its layers. The thermal and solar-optical properties of the shading device are given by the shading material referenced in that Construction (ref: Construction, Material:WindowShade and Material:WindowBlind). To use this method you have to define <u>two</u> Constructions for the window, one <u>without</u> the shading device and one <u>with</u> it. See Example 1, below.

The Construction <u>without</u> the shading device is referenced in the Surface:HeatTransfer:Sub input for the window (see IDF example, below). The Construction <u>with</u> the shading device is referenced by the window's WindowShadingControl.

For Shading Type = InteriorShade, InteriorBlind, ExteriorShade and ExteriorBlind these two Constructions must be identical expect for the presence of the shading layer in the shaded Construction, otherwise you will get an error message. You will also get an error message if the Construction referenced by the window has a shading layer.

Specify the "Material Name of the Shading Device"

This is the name of a Material:WindowShade or Material:WindowBlind. This method can be used with all Shading Types except SwitchableGlazing. If Shading Type =

InteriorShade or ExteriorShade, then you specify the name of a Material:WindowShade. If Shading Type = InteriorBlind or ExteriorBlind, then you specify the name of a Material:WindowBlind. See Example 2, below. This method is simpler to use since you don't have to specify two Constructions that differ only by the shading layer.

When this method is used, the program will automatically create a shaded window construction by adding a shading layer to the outside or inside of the construction corresponding to the window referencing the WindowShadingControl. The name of this shaded construction is composed as follows: if the name of the window construction is CCC and the material name of the shading device is DDD, then the shaded construction name is CCC:DDD:INT for an interior shading device and CCC:DDD:EXT for an exterior shading device.

This method is the required if you want to add a shading device to a construction brought in from a WINDOW5 Data File (ref: Construction from WINDOW5 Data File).

Note that if both "Name of Construction with Shading" and "Material Name of Shading Device" are specified, the former takes precedence.

Most Shading Control Types allow you to specify a schedule that determines when the control is active. One example is a control that is active seasonally. For example, to deploy shading only in the summer when the incident solar is high enough, use Shading Control Type = OnIfHighSolarOnWindow with a schedule that is 1 during the summer months and 0 otherwise and specify Shading Control Is Scheduled = YES.

In addition, most Shading Control Types also allow you to specify that glare control is active in addition to the specified Control Type. For example, you might want to deploy shading when the solar incident on a window is too high OR the glare from the window is too high. This type of joint control requires that the window be in a daylit zone, that the maximum allowed glare be specified in the Daylighting object for the zone, and that Glare Control Is Active = YES in WindowShadingControl.

If Shading Type = InteriorBlind or ExteriorBlind you can use WindowShadingControl to specify how the slat angle of the blind is controlled when the blind is in place.

A special type of WindowShadingControl is SwitchableGlazing. An example is electrochromic glazing in which the transmittance and reflectance of the glass is controlled electronically. For example, you could have electrochromic glazing switch from clear (high transmittance) to dark (low transmittance) to control solar gain. If you choose the Shading Type = SwitchableGlazing option for WindowShadingControl, the unswitched (clear) state is specified by the Construction referenced by the window and the switched (dark) state is specified by the Construction referenced by WindowShadingControl for that window. For example, if you specify Shading Type = SwitchableGlazing and Shading Control Type = OnIfHighSolarOnWindow, then the glazing will switch to the dark state whenever the solar radiation striking the window exceeds the Setpoint value.

For Shading Type = SwitchableGlazing the state of the window is either clear (unswitched) or dark (fully switched) for all Shading Control Types except MeetDaylightIlluminanceSetpoint. In this case, the transmittance of the glazing is adjusted to just meet the daylight illuminance set point at the first daylighting reference point (see Daylighting). This type of control assures that there is just enough solar gain to meet the daylighting requirements in a zone, and no more, thus reducing the cooling load.

Field: User Supplied Shading Control Name

Name of the window shading control. It is referenced by a window (ref: Name of Shading Control in Surface:HeatTransfer:Sub).

Field: Shading Type

The type of shading device. The choices are:

InteriorShade: A diffusing shade is on the inside of the window. (In the shaded Construction the shading layer must be a Material:WindowShade.)

ExteriorShade: A diffusing shade is on the outside of the window. (In the shaded Construction the shading layer must be a Material:WindowShade.)

InteriorBlind: A slat-type shading device, such as a Venetian blind, is on the inside of the window. (In the shaded Construction the shading layer must be a Material:WindowBlind.)

ExteriorBlind: A slat-type shading device is on the outside of the window. (In the shaded Construction the shading layer must be a Material:WindowBlind.)

SwitchableGlazing: Shading is achieved by changing the characteristics of the window glass, such as by darkening it.

Field: Name of Construction with Shading

Name of the window Construction that has the shading in place. The properties of the shading device are given by the shading material referenced in that Construction (ref: Construction, Material:WindowShade and Material:WindowBlind). For Shading Type = SwitchableGlazing, this is the name of the Construction that corresponds to the window in its fully-switched (darkest) state.

Specifying “Name of Construction with Shading” is required if Shading Type = SwitchableGlazing. For other Shading Types, you may alternatively specify “Material Name of Shading Device” (see below).

Field: Shading Control Type

Specifies how the shading device is controlled, i.e., it determines whether the shading device is “on” or “off.” For blinds and shades, when the device is “on” it is assumed to cover all of the window except its frame; when the device is “off” it is assumed to cover none of the window (whether “on” or “off” the shading device is assumed to cover none of the wall that the window is on).

For switchable glazing, “on” means that the glazing is in the fully-switched state and “off” means that it is in the unswitched state; for example, for electrochromic glazing, “on” means the glazing is in its darkest state and “off” means it is in its lightest state.

The choices for Shading Control Type are the following. If SetPoint is applicable its units are shown in parentheses.

AlwaysOn: Shading is always on.

AlwaysOff: Shading is always off.

The following six control types are used primarily to reduce zone cooling load due to window solar gain.

OnIfScheduleAllows: Shading is on if schedule value is non-zero. Requires that Schedule Name be specified and Shading Control Is Scheduled = Yes.

OnIfHighSolarOnWindow: Shading is on if beam plus diffuse solar radiation incident on the window exceeds SetPoint (W/m^2) and schedule, if specified, allows shading.

OnIfHighHorizontalSolar: Shading is on if total (beam plus diffuse) horizontal solar irradiance exceeds SetPoint (W/m^2) and schedule, if specified, allows shading.

OnIfHighOutsideAirTemp: Shading is on if outside air temperature exceeds SetPoint (C) and schedule, if specified, allows shading.

OnIfHighZoneAirTemp: Shading is on if zone air temperature in the previous time step exceeds SetPoint (C) and schedule, if specified, allows shading.

OnIfHighZoneCooling: Shading is on if zone cooling rate in the previous time step exceeds SetPoint (W) and schedule, if specified, allows shading.

OnIfHighGlare: Shading is on if the total daylight glare index at the zone's first daylighting reference point from all of the exterior windows in the zone exceeds the maximum glare index specified in the daylighting input for zone (ref: Daylighting). Applicable only to windows in zones with daylighting.

Note: Unlike other Shading Control Types, glare control is active whether or not a schedule is specified.

MeetDaylightIlluminanceSetpoint: Used only with ShadingType = SwitchableGlazing in zones with daylighting controls (ref: Daylighting). In this case the transmittance of the glazing is adjusted to just meet the daylight illuminance set point at the first daylighting reference point. Note that the daylight illuminance set point is specified in the zone's Daylighting object; it is <u>not</u> specified as a WindowShadingControl SetPoint.

The following three control types can be used to reduce zone heating load during the winter by reducing window conductive heat loss at night and leaving the window unshaded during the day to maximize solar gain. They are applicable to any Shading Type but are most appropriate for interior or exterior shades with high insulating value ("movable insulation"). "Night" means the sun is down and "day" means the sun is up.

OnNightIfLowOutsideTemp/OffDay: Shading is on at night if the outside air temperature is less than SetPoint (C) and schedule, if specified, allows shading. Shading is off during the day.

OnNightIfLowInsideTemp/OffDay: Shading is on at night if the zone air temperature in the previous time step is less than SetPoint (C) and schedule, if specified, allows shading. Shading is off during the day.

OnNightIfHeating/OffDay: Shading is on at night if the zone heating rate in the previous time step exceeds SetPoint (W) and schedule, if specified, allows shading. Shading is off during the day.

The following two control types can be used to reduce zone heating and cooling load. They are apllicable to any Shading Type but are most appropriate for translucent interior or exterior shades with high insulating value ("translucent movable insulation").

OnNightIfLowOutsideTemp/OnDayIfCooling: Shading is on at night if the outside air temperature is less than SetPoint (C). Shading is on during the day if the zone cooling rate in the previous time step is non-zero. Night and day shading is subject to schedule, if specified.

OnNightIfHeating/OnDayIfCooling: Shading is on at night if the zone heating rate in the previous time step exceeds SetPoint (W). Shading is on during the day if the zone cooling rate in the previous time step is non-zero. Night and day shading is subject to schedule, if specified.

The following two control types can be used to reduce zone cooling load. They are applicable to any Shading Type but are most appropriate for interior or exterior blinds, interior or exterior shades with low insulating value, or switchable glazing.

OffNight/OnDayIfCoolingAndHighSolarOnWindow: Shading is off at night. Shading is on during the day the solar radiation incident on the window exceeds SetPoint (W/m^2) and if the zone cooling rate in the previous time step is non-zeo. Daytime shading is subject to schedule, if specified.

OnNight/OnDayIfCoolingAndHighSolarOnWindow: Shading is on at night. Shading is on during the day the solar radiation incident on the window exceeds SetPoint (W/m^2) and if the zone cooling rate in the previous time step is non-zeo. Day and night shading is subject to

schedule, if specified. (This Shading Control Type is the same as the previous one, except the shading is on at night rather than off.)

Field: Schedule Name

Required if Shading Control Is Scheduled = Yes. If schedule value >0 , shading control is active, i.e., shading can be on only if the shading control test passes. If schedule value = 0, shading is off whether or not the control test passes. If Schedule Name is not specified, shading control is assumed to be active at all times.

Field: SetPoint

The setpoint for activating window shading. The units depend on the type of trigger:

- W/m^2 for solar-based controls
- W for cooling- or heating-based controls
- Degrees C for temperature-based controls

SetPoint is unused for Shading Control Type = OnIfScheduleAllows, OnIfHighGlare and DaylightIlluminance.

Field: Shading Control Is Scheduled

Accepts values YES and NO. The default is NO. Not applicable for Shading Control Type = OnIfHighGlare and should be blank in that case.

If YES, Schedule Name is required and that schedule determines whether the shading control specified by Shading Control Type is active or inactive (see Schedule Name, above).

If NO, Schedule Name is not applicable (should be blank) and the shading control is unscheduled.

Shading Control Is Scheduled = YES is required if Shading Control Type = OnIfScheduleAllows.

Field: Glare Control Is Active

Accepts values YES and NO. The default is NO.

If YES and the window is in a daylit zone (ref: Daylighting), shading is on if the zone's discomfort glare index exceeds the maximum discomfort glare index specified in the Daylighting object referenced by the zone.

The glare test is OR'ed with the test specified by Shading Control Type. For example, if Glare Control Is Active = YES and Shading Control Type = OnIfHighZoneAirTemp, then shading is on if glare is too high OR if the zone air temperature is too high.

Glare Control Is Active = YES is required if Shading Control Type = OnIfHighGlare.

Field: Material Name of Shading Device

The name of a Material:WindowShade or Material:WindowBlind. Required if "Name of Construction with Shading" is not specified. Not applicable if Shading Type = SwitchableGlazing and should be blank in this case. If both "Name of Construction with Shading" and "Material Name of Shading Device" are entered the former takes precedence.

Field: Type of Slat Angle Control for Blinds

Applies only to Shading Type = InteriorBlind or ExteriorBlind. Specifies how the slat angle is controlled. The choices are FixedSlatAngle, ScheduledSlatAngle and BlockBeamSolar.

If FixedSlatAngle (the default), the angle of the slat is fixed at the value input for the Material:WindowBlind that is contained in the construction specified by Name of Construction with Shading or is specified by Material Name of Shading Device.

If ScheduledSlatAngle, the slat angle varies according to the schedule specified by Slat Angle Schedule Name, below.

If BlockBeamSolar, the slat angle is set each time step to just block beam solar radiation. If there is no beam solar on the window the slat angle is set to the value input for the Material:WindowBlind that is contained in the construction specified by Name of Construction with Shading or is specified by Material Name of Shading Device. The BlockBeamSolar option prevents beam solar from entering the window and causing possible unwanted glare if the beam falls on work surfaces while at the same time allowing near-optimal indirect radiation for daylighting.

Field: Slat Angle Schedule Name

This is the name of a schedule of slat angles that is used when Type of Slat Angle Control for Blinds = ScheduledSlatAngle. You should be sure that the schedule values fall within the range given by the Minimum Slat Angle and Maximum Slat Angle values entered in the corresponding Material:WindowBlind. If not, the program will force them into this range.

```
WindowShadingControl,
    \min-fields 9
  A1 , \field User Supplied Shading Control Name
       \required-field
       \type alpha
       \reference WindowShadeControlNames
       \note Referenced by surfaces that are exterior windows
       \note Not used by interzone windows
  A2 , \field Shading Type
       \required-field
       \type choice
       \key InteriorShade
       \key ExteriorShade
       \key InteriorBlind
       \key ExteriorBlind
       \key SwitchableGlazing
       \note The following four entries are for upward compatibility; if entered, will
       \note be set to InteriorShade or ExteriorShade
         \key InteriorNonInsulatingShade
         \key ExteriorNonInsulatingShade
         \key InteriorInsulatingShade
         \key ExteriorInsulatingShade
  A3 , \field Name of construction with shading
       \type object-list
       \object-list ConstructionNames
       \note Required if Shading Type = SwitchableGlazing
       \note Required if Shading Type = interior or exterior shade or blind and
       \note "Material Name of Shading Device" is not specified.
       \note If both "Name of Construction with Shading" and "Material Name of Shading Device"
       \are entered, the former takes precedence.
```

```
A4 , \field Shading Control Type
     \required-field
     \type choice
     \key AlwaysOn
     \key AlwaysOff
     \note The following six control types are used primarily to reduce
     \note zone cooling load due to window solar gain
     \key OnIfScheduleAllows
     \key Schedule          ! old form of OnIfScheduleAllows
     \note OnIfScheduleAllows requires that Schedule Name be specified and
     \note Shading Control Is Scheduled = Yes.
     \key OnIfHighSolarOnWindow
     \key SolarOnWindow     ! old form of OnIfHighSolarOnWindow
     \key OnIfHighHorizontalSolar
     \key HorizontalSolar   ! old form of OnIfHighHorizontalSolar
     \key OnIfHighOutsideAirTemp
     \key OutsideAirTemp    ! old form of OnIfHighOutsideAirTemp
     \key OnIfHighZoneAirTemp
     \key ZoneAirTemp       ! old form of OnIfHighZoneAirTemp
     \key OnIfHighZoneCooling
     \key ZoneCooling       ! old form of OnIfHighZoneCooling
     \key OnIfHighGlare
     \key Glare             ! old form of OnIfHighGlare
     \note Following entry should be used only if Shading Type = SwitchableGlazing
     \note and window is in a daylit zone
     \key MeetDaylightIlluminanceSetpoint
     \key DaylightIlluminance ! old form of MeetDaylightIlluminanceSetpoint
     \note The following three control types are used to reduce zone heating load. They can be
     \note used with any Shading Type but are most appropriate for opaque interior or exterior
     \note shades with high insulating value ("opaque movable insulation")
     \key OnNightIfLowOutsideTemp/OffDay
     \key OnNightIfLowInsideTemp/OffDay
     \key OnNightIfHeating/OffDay
     \note The following two control types are used to reduce zone heating and cooling load.
     \note They can beused with any Shading Type but are most appropriate for translucent interior
     \note or exterior shades with high insulating value ("translucent movable insulation")
     \key OnNightIfLowOutsideTemp/OnDayIfCooling
     \key OnNightIfHeating/OnDayIfCooling
     \note The following two control types are used to reduce zone cooling load.
     \note They can beused with any Shading Type but are most appropriate for interior
     \note or exterior blinds,interior or exterior shades with low insulating value, or
     \note switchable glazing
     \key OffNight/OnDayIfCoolingAndHighSolarOnWindow
     \key OnNight/OnDayIfCoolingAndHighSolarOnWindow
A5 , \field Schedule Name
     \type object-list
     \object-list ScheduleNames
     \note Required if Shading Control Is Scheduled = Yes.
     \note If schedule value = 1, shading control is active, i.e., shading can take place only
     \note if the control test passes. If schedule value = 0, shading is off whether or not
     \note the control test passes. Schedule Name is required if ShadingControlIsScheduled = Yes.
     \note If Schedule Name is not specified, shading control is assumed to be active at all times.
N1 , \field SetPoint
     \units W/m2, W or deg C
     \note W/m2 for solar-based controls, W for cooling- or heating-based controls,
     \note deg C for temperature-based controls.
     \note Unused for Shading Control Type = OnIfScheduleAllows, OnIfHighGlare and DaylightIlluminance
     \type real
A6 , \field Shading Control Is Scheduled
     \type choice
     \key No
     \key Yes
     \default No
     \note If Yes, Schedule Name is required; if No, Schedule Name is not used.
     \note Shading Control Is Scheduled=Yes is required if Shading Control Type = OnIfScheduleAllows.
```

```
A7 , \field Glare Control Is Active
     \type choice
     \key No
     \key Yes
     \default No
     \note If Yes and window is in a daylit zone, shading is on if zone's discomfort glare index exceeds
     \note the maximum discomfort glare index specified in the Daylighting object referenced
     \by the zone.
     \note The glare test is OR'ed with the test specified by Shading Control Type.
     \note Glare Control Is Active = Yes is required if Shading Control Type = OnIfHighGlare.
A8,  \field Material Name of Shading Device
     \type object-list
     \object-list MaterialNames
     \note Must be the name of a Material:WindowShade or Material:WindowBlind.
     \note Required if "Name of Construction with Shading" is not specified.
     \note Not used if Shading Type = SwitchableGlazing.
     \note If both "Name of Construction with Shading" and "Material Name of Shading Device" are
     \entered, the former takes precedence.
A9,  \field Type of Slat Angle Control for Blinds
     \type choice
     \key FixedSlatAngle
     \key ScheduledSlatAngle
     \key BlockBeamSolar
     \default FixedSlatAngle
     \note Used only if Shading Type = InteriorBlind or ExteriorBlind.
     \note If choice is ScheduleSlatAngle then Slat Angle Schedule Name is required.
A10; \field Slat Angle Schedule Name
     \type object-list
     \object-list ScheduleNames
     \note Used only if Shading Type = InteriorBlind or ExteriorBlind.
     \note Required if Type of Slat Angle Control for Blinds = ScheduledSlatAngle
```

An IDF example: window with interior roll shade that is deployed when solar incident on the window exceeds 50 W/m^2.

```
! Example 1: Interior movable shade specified by giving name of shaded construction
! in WindowShadingControl

MATERIAL:WindowGlass, GLASS - CLEAR SHEET 1 / 8 IN,  !- Material Name
    SpectralAverage,! Optical data type {SpectralAverage or Spectral}
    ,               ! Name of spectral data set when Optical Data Type = Spectral
    0.003        ,  !- Thickness {m}
    0.837        ,  !- Solar Transmittance at Normal Incidence
    0.075        ,  !- Solar Reflectance at Normal Incidence: Front Side
    0.075        ,  !- Solar Reflectance at Normal Incidence: Back Side
    0.898        ,  !- Visible Transmittance at Normal Incidence
    0.081        ,  !- Visible Reflectance at Normal Incidence: Front Side
    0.081        ,  !- Visible Reflectance at Normal Incidence: Back Side
    0.0          ,  !- IR Transmittance
    0.8400000    ,  !- IR Emissivity: Front Side
    0.8400000    ,  !- IR Emissivity: Back Side
    0.9000000    ;  !- Conductivity {W/m-K}

MATERIAL:WindowShade, ROLL SHADE,  !- Material Name
    0.3          ,   !- Solar Transmittance at normal incidence
    0.5000000    ,   !- Solar Reflectance (same for front and back side)
    0.3          ,   !- Visible Transmittance at normal incidence
    0.5000000    ,   !- Visible reflectance (same for front and back side)
    0.9000000    ,   !- IR Emissivity (same for front and back side)
    0.05         ,   !- IR Transmittance
    0.003        ,   !- Thickness
    0.1          ,   !- Conductivity {W/m-K}
    0.0          ,   !- Top Opening Multiplier
    0.0          ,   !- Bottom Opening Multiplier
    0.5          ,   !- Left-Side Opening Multiplier
    0.5          ,   !- Right-Side Opening Multiplier
    0.0          ;   !- Air-Flow Permeability
CONSTRUCTION, SINGLE PANE WITH NO SHADE,  ! Name of construction without shade
    GLASS - CLEAR SHEET 1 / 8 IN;  !- First material layer

CONSTRUCTION, SINGLE PANE WITH INT SHADE, ! Name of construction with shade
    GLASS - CLEAR SHEET 1 / 8 IN,  !- First material layer
    ROLL SHADE                  ;  !- Second material layer

WINDOWSHADINGCONTROL, CONTROL ON INCIDENT SOLAR,  !- Name of Shading Control
    InteriorShade,                !- Shading Type
    SINGLE PANE WITH INT SHADE,   !- Name of construction with shading device
    OnIfHighSolarOnWindow,        !- Shading Control Type
    ,                             !- Schedule name
    50.0,                         !- Setpoint {W/m2}
    NO,                           !- Shading Control Is Scheduled
    NO,                           !- Glare Control Is Active
    ,                             !- Material Name of Shading Device
    ,                             !- Type of Slat Angle Control for Blinds
    ;                             !- Slat Angle Schedule Name

Surface:HeatTransfer:Sub, Zn001:Wall001:Win001,  !- SubSurface Name
    Window                   ,    !- Class
    SINGLE PANE WITH NO SHADE,    !- Name of construction without shading device
    Zn001:Wall001            ,    !- Base Surface Name
    ,                             !- Target
    0.5000000                ,    !- VF to Ground
    CONTROL ON INCIDENT SOLAR,    !- Window Shading Control name
    ,                             !- Frame/Divider name
    1.0                      ,    !- Multiplier
    4                        ,    !- Number of vertices (assumed rectangular)
    0.548 ,  0.0 ,   2.5     ,    !- x,y,z of vertices {m}
    0.548 ,  0.0 ,   0.5     ,
    5.548 ,  0.0 ,   0.5     ,
    5.548 ,  0.0 ,   2.5     ;
```

```
! Example 2: Interior movable shade specified by giving name of shading device in WindowShadingControl

MATERIAL:WindowGlass, GLASS - CLEAR SHEET 1 / 8 IN,  !- Material Name
    SpectralAverage,! Optical data type {SpectralAverage or Spectral}
    ,               ! Name of spectral data set when Optical Data Type = Spectral
    0.003        ,  !- Thickness {m}
    0.837        ,  !- Solar Transmittance at Normal Incidence
    0.075        ,  !- Solar Reflectance at Normal Incidence: Front Side
    0.075        ,  !- Solar Reflectance at Normal Incidence: Back Side
    0.898        ,  !- Visible Transmittance at Normal Incidence
    0.081        ,  !- Visible Reflectance at Normal Incidence: Front Side
    0.081        ,  !- Visible Reflectance at Normal Incidence: Back Side
    0.0          ,  !- IR Transmittance
    0.8400000    ,  !- IR Emissivity: Front Side
    0.8400000    ,  !- IR Emissivity: Back Side
    0.9000000    ;  !- Conductivity {W/m-K}

MATERIAL:WindowShade, ROLL SHADE,  !- Material Name
    0.3          ,   !- Solar Transmittance at normal incidence
    0.5000000    ,   !- Solar Reflectance (same for front and back side)
    0.3          ,   !- Visible Transmittance at normal incidence
    0.5000000    ,   !- Visible reflectance (same for front and back side)
    0.9000000    ,   !- IR Emissivity (same for front and back side)
    0.05         ,   !- IR Transmittance
    0.003        ,   !- Thickness
    0.1          ,   !- Conductivity {W/m-K}
    0.0          ,   !- Top Opening Multiplier
    0.0          ,   !- Bottom Opening Multiplier
    0.5          ,   !- Left-Side Opening Multiplier
    0.5          ,   !- Right-Side Opening Multiplier
    0.0          ;   !- Air-Flow Permeability

CONSTRUCTION, SINGLE PANE WITH NO SHADE,  ! Name of construction without shade
    GLASS - CLEAR SHEET 1 / 8 IN;  !- First material layer

WINDOWSHADINGCONTROL, CONTROL ON INCIDENT SOLAR,  !- Name of Shading Control
    InteriorShade,                !- Shading Type
    ,                             !- Name of shaded construction
    OnIfHighSolarOnWindow,        !- Shading Control Type
    ,                             !- Schedule name
    50.0,                         !- Setpoint {W/m2}
    NO,                           !- Shading Control Is Scheduled
    NO,                           !- Glare Control Is Active
    ROLL SHADE,                   !- Material Name of Shading Device
    ,                             !- Type of Slat Angle Control for Blinds
    ;                             !- Slat Angle Schedule Name

Surface:HeatTransfer:Sub, Zn001:Wall001:Win001,  !- SubSurface Name
    Window                   ,    !- Class
    SINGLE PANE WITH NO SHADE,    !- Name of construction without shade
    Zn001:Wall001            ,    !- Base Surface Name
    ,                             !- Target
    0.5000000                ,    !- VF to Ground
    CONTROL ON INCIDENT SOLAR,    !- Window Shading Control name
    ,                             !- Frame/Divider name
    1.0                      ,    !- Multiplier
    4                        ,    !- Number of vertices (assumed rectangular)
    0.548 ,  0.0 ,   2.5     ,    !- x,y,z of vertices {m}
    0.548 ,  0.0 ,   0.5     ,
    5.548 ,  0.0 ,   0.5     ,
    5.548 ,  0.0 ,   2.5     ;
```

WindowFrameAndDivider

The WindowFrameAndDivider object is referenced by exterior windows that have

- a frame, and/or

- a divider, and/or
- reveal surfaces that reflect beam solar radiation.

A ***frame*** surrounds the glazing in a window (see Figure 17 and Figure 18). It is assumed that all frame characteristics—such as width, conductance and solar absorptance—are the same for the top, bottom and side elements of the frame. If the frame elements are not the same then you should enter area-weighted average values for the frame characteristics.

The window vertices that you specify in the Surface:HeatTransfer:Sub object are those of the glazed part of the window, not the frame. EnergyPlus automatically subtracts the area of the frame—determined from the glazing dimensions and the frame width—from the area of the wall containing the window.

A ***divider***, as shown in Figure 17, Figure 18 and Figure 19, divides the glazing up into separate lites. It is assumed that all divider elements have the same characteristics. If not, area-weighted average values should be used. EnergyPlus automatically subtracts the divider area from the glazed area of the window.

Reveal surfaces, as shown in Figure 20, are associated with the setback of the glazing from the outside and/or inside surface of the parent wall. If the depth and solar absorptance of these surfaces are specified, the program will calculate the reflection of beam solar radiation from these surfaces. The program also calculates the shadowing (onto the window) of beam and diffuse solar radiation by outside reveal surfaces.

In EnergyPlus, a window can have any combination of frame, divider and reveal surfaces, or none of these.

The best source of frame and divider characteristics is the WINDOW 5 program, which will calculate the values required by EnergyPlus for different frame and divider types. In particular, the THERM program within WINDOW 5 will calculate the effective conductance of frames and dividers; this is the conductance taking 2-D heat transfer effects into account.

Note that a window's frame and divider characteristics, along with other window information, can be read in from the Window 5 Data File (see "Importing Windows from WINDOW 5" and "Construction from Window5 Data File"). In this case the WindowFrameAndDivider referenced by the window is not applicable and should be blank unless you want to specify reveal surfaces for beam solar reflection.

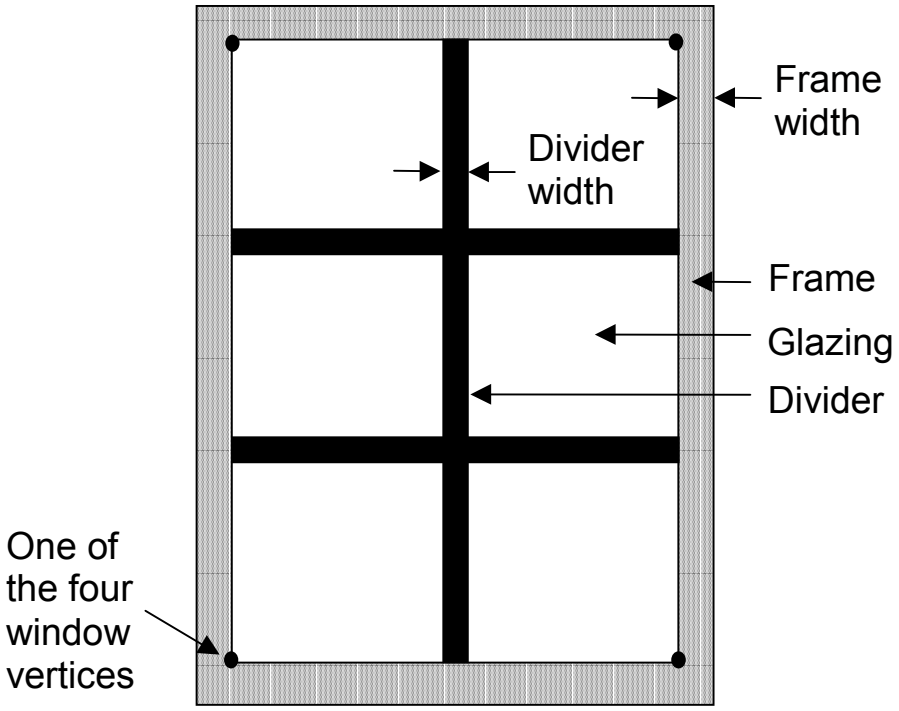

Figure 17. A window with a frame and divider.

In the illustration above, the divider has two horizontal elements and one vertical element.

Field: User Supplied Frame/Divider Name

The name of the frame/divider object. It is referenced by WindowFrameAndDivider Name in Surface:HeatTransfer:Sub.

Frame Fields

Field: Frame Width

The width of the frame elements when projected onto the plane of the window. It is assumed that the top, bottom and side elements of the frame have the same width. If not, an average frame width should be entered such that the projected frame area calculated using the average value equals the sum of the areas of the frame elements.

Field: Frame Outside Projection

The amount by which the frame projects outward from the outside surface of the window glazing. If the outer surface of the frame is flush with the glazing, Frame Outside Projection = 0.0. Used to calculate shadowing of frame onto glass, solar absorbed by frame, IR emitted and absorbed by frame, and convection from frame.

Field: Frame Inside Projection

The amount by which the frame projects inward from the inside surface of the window glazing. If the inner surface of the frame is flush with the glazing, Frame Inside Projection = 0.0. Used to calculate solar absorbed by frame, IR emitted and absorbed by frame, and convection from frame.

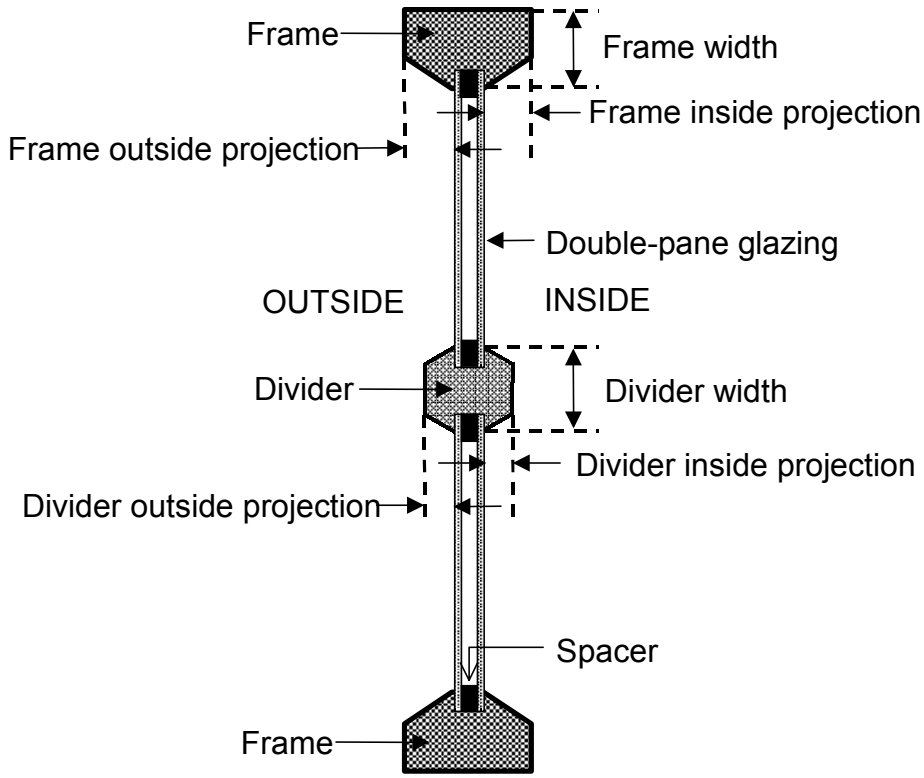

Figure 18. Illustration showing frame and divider dimensioning.

Field: Frame Conductance

The effective thermal conductance of the frame measured from inside to outside frame surface (no air films) and taking 2-D conduction effects into account. Obtained from WINDOW 5 or other 2-D calculation.

Field: Ratio of Frame-Edge Glass Conductance to Center-Of-Glass Conductance

The glass conductance near the frame (excluding air films) divided by the glass conductance at the center of the glazing (excluding air films). Used only for multi-pane glazing constructions. This ratio is greater than 1.0 because of thermal bridging from the glazing across the frame and across the spacer that separates the glass panes. Values can be obtained from WINDOW 5 for the user-selected glazing construction and frame characteristics.

Field: Frame Solar Absorptance

The solar absorptance of the frame. The value is assumed to be the same on the inside and outside of the frame and to be independent of angle of incidence of solar radiation.

Field: Frame Visible Absorptance

The visible absorptance of the frame. The value is assumed to be the same on the inside and outside of the frame and to be independent of angle of incidence of solar radiation.

Field: Frame Thermal Hemispherical Emissivity

The thermal emissivity of the frame, assumed the same on the inside and outside.

Divider Fields

Field: Divider Type

The type of divider (see figure below). Divider Type = Suspended is applicable only to multi-pane glazing. It means that the divider is suspended between the panes. (If there are more than two glass layers, the divider is assumed to be placed between the two outermost layers.)

Divider Type = DividedLite means that the divider elements project out from the outside and inside surfaces of the glazing and divide the glazing into individual lites. For multi-pane glazing, this type of divider also has between-glass elements that separate the panes.

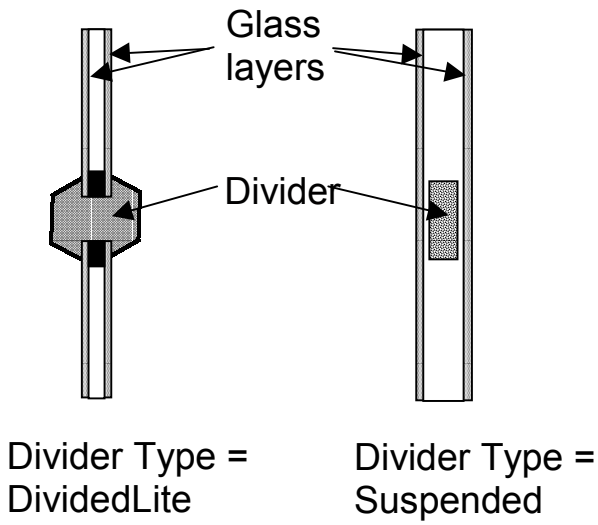

Figure 19. Illustration showing divider types.

Field: Divider Width

The width of the divider elements when projected onto the plane of the window. It is assumed that the horizontal and vertical divider elements have the same width. If not, an average divider width should be entered such that the projected divider area calculated using the average value equals the sum of the areas of the divider elements.

Field: Number of Horizontal Dividers

The number of divider elements parallel to the top and bottom of the window.

Field: Number of Vertical Dividers

The number of divider elements parallel to the sides of the window.

Field: Divider Outside Projection

The amount by which the divider projects out from the outside surface of the window glazing. For Divider Type = Suspended, Divider Projection = 0.0. Used to calculate shadowing of divider onto glass, solar absorbed by divider, IR emitted and absorbed by divider, and convection from divider.

Field: Divider Inside Projection

The amount by which the divider projects inward from the inside surface of the window glazing. If the inner surface of the divider is flush with the glazing, Divider Inside Projection = 0.0. Used to calculate solar absorbed by divider, IR emitted and absorbed by divider, and convection from divider.

Field: Divider Conductance

The effective thermal conductance of the divider measured from inside to outside divider surface (no air films) and taking 2-D conduction effects into account. Obtained from WINDOW 5 or other 2-D calculation.

Field: Ratio of Divider-Edge Glass Conductance to Center-Of-Glass Conductance

The glass conductance near the divider (excluding air films) divided by the glass conductance at the center of the glazing (excluding air films). Used only for multi-pane glazing constructions. This ratio is greater than 1.0 because of thermal bridging from the glazing across the divider and across the spacer that separates the glass panes. Values can be obtained from WINDOW 5 for the user-selected glazing construction and divider characteristics.

Field: Divider Solar Absorptance

The solar absorptance of the divider. The value is assumed to be the same on the inside and outside of the divider and to be independent of angle of incidence of solar radiation.

Field: Divider Visible Absorptance

The visible absorptance of the divider. The value is assumed to be the same on the inside and outside of the divider and to be independent of angle of incidence of solar radiation.

Field: Divider Thermal Hemispherical Emissivity

The thermal emissivity of the divider, assumed the same on the inside and outside.

Reveal Surface Fields

The following fields specify the properties of the window reveal surfaces. From this information and from the geometry of the window and the sun position, the program calculates beam solar radiation absorbed and reflected by the top, bottom, right and left sides of outside and inside window reveal surfaces. In doing this calculation, the shadowing on a reveal surface by other reveal surfaces is determined using the orientation of the reveal surfaces and the sun position.

It is assumed that:

- The window is an exterior window and is rectangular.
- The reveal surfaces are perpendicular to the window plane.
- If an exterior shade or blind is in place it shades exterior and interior reveal surfaces so that in this case there is no beam solar on these surfaces.
- If an interior shade or blind is in place it shades the interior reveal surfaces so that in this case there is no beam solar on these surfaces.
- The possible shadowing on inside reveal surfaces by a window divider is ignored.
- The outside reveal surfaces (top, bottom, left, right) have the same solar absorptance and depth. This depth is not input here but is automatically determined by

the program—from window and wall vertices--as the distance between the plane of the outside face of the glazing and plane of the outside face of the parent wall.

- The inside reveal surfaces are divided into two categories: (1) the bottom reveal surface, called here the "inside sill;" and (2) the other reveal surfaces (left, right and top).
- The left, right and top inside reveal surfaces have the same depth and solar absorptance. The inside sill is allowed to have depth and solar absorptance values that are different from the corresponding values for the other inside reveal surfaces.
- The inside sill depth is required to be greater than or equal to the depth of the other inside reveal surfaces. If the inside sill depth is greater than zero the depth of the other inside reveal surfaces is required to be greater than zero.
- The reflection of beam solar radiation from all reveal surfaces is assumed to be isotropic diffuse; there is no specular component.
- Half of the beam solar reflected from outside reveal surfaces is goes towards the window; the other half goes back to the exterior environment (i.e., reflection of this outward-going component from other outside reveal surfaces is not considered).
- The half that goes towards the window is added to the other solar radiation incident on the window. Correspondingly, half of the beam solar reflected from inside reveal surfaces goes towards the window, with the other half going into the zone. The portion going towards the window that is not reflected is absorbed in the glazing or is transmitted back out into the exterior environment.
- The beam solar that is absorbed by outside reveal surfaces is added to the solar absorbed by the outside surface of the window's parent wall; similarly, the beam solar absorbed by the inside reveal surfaces is added to the solar absorbed by the inside surface of the parent wall.

The net effect of beam solar reflected from outside reveal surfaces is to increase the heat gain to the zone, whereas the effect of beam solar reflected from inside reveal surfaces is to decrease the heat gain to the zone since part of this reflected solar is transmitted back out the window.

If the window has a frame, the absorption of reflected beam solar by the inside and outside surfaces of the frame is considered. The shadowing of the frame onto interior reveal surfaces is also considered.

Field: Outside Reveal Solar Absorptance

The solar absorptance of outside reveal surfaces.

Field: Inside Sill Depth

The depth of the inside sill, measured from the inside surface of the glazing to the edge of the sill (see Figure 20).

Field: Inside Sill Solar Absorptance

The solar absorptance of the inside sill.

Field: Inside Reveal Depth

The depth of the inside reveal surfaces other than the sill, measured from the inside surface of the glazing to the edge of the reveal surface (see Figure 20).

Field: Inside Reveal Solar Absorptance

The solar absorptance of the inside reveal surfaces other than the sill.

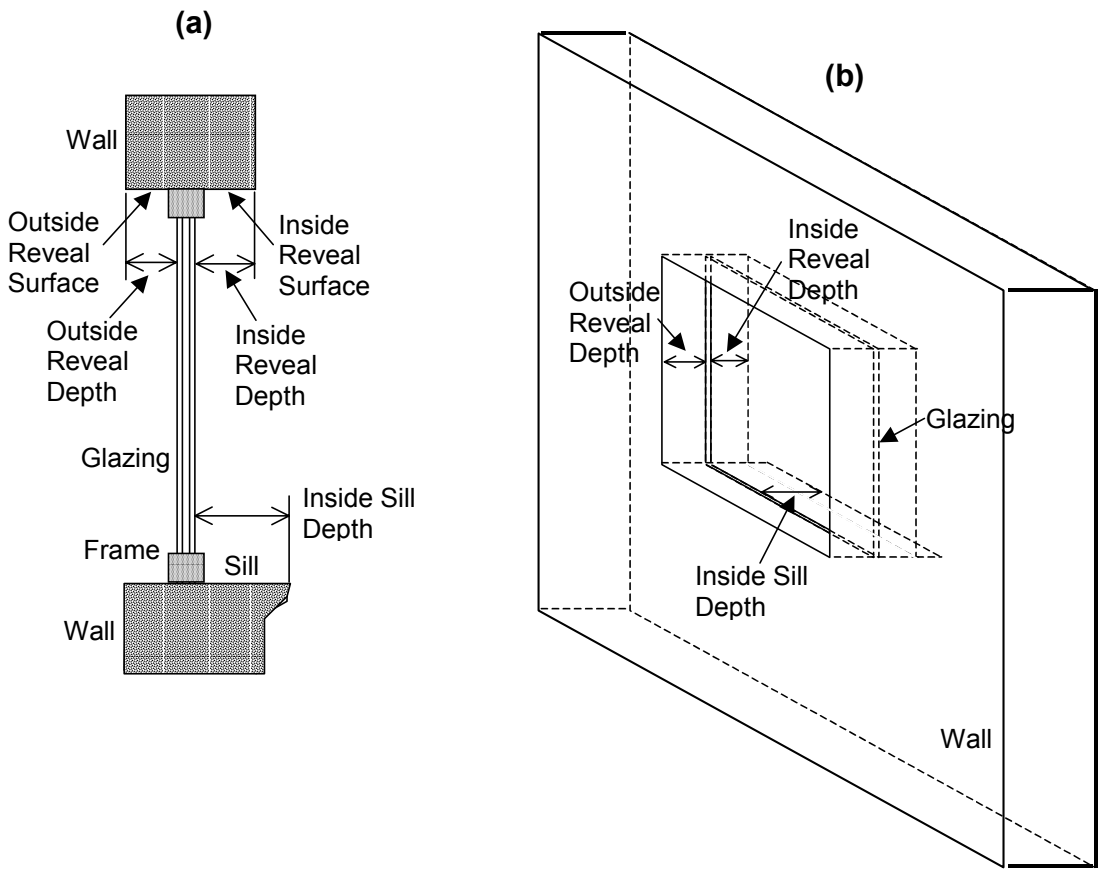

Figure 20. (a) Vertical section through a window (with frame) showing outside and inside reveal surfaces and inside sill. (b) Perspective view looking from the outside of a window (without frame) showing reveal surfaces. Note that “Outside Reveal Depth” is not a user input; it is calculated by the program from the window and wall vertices.

```
WindowFrameAndDivider,
    A1 , \field User Supplied Frame/Divider Name
         \type alpha
         \reference WindowFrameAndDividerNames
         \note Referenced by surfaces that are exterior windows
         \note Not used by interzone windows
    N1 , \field Frame Width
         \units m
         \type real
         \minimum 0.0
         \default 0.0
         \note Width of frame in plane of window
         \note Frame width assumed the same on all sides of window
    N2 , \field Frame Outside Projection
         \units m
         \type real
         \minimum 0.0
         \default 0.0
         \note Amount that frame projects outward from the outside face of the glazing
    N3 , \field Frame Inside Projection
         \units m
         \type real
         \minimum 0.0
         \default 0.0
         \note Amount that frame projects inward from the inside face of the glazing
    N4 , \field Frame Conductance
         \units W/m2-K
```

```
     \type real
     \minimum 0.0
     \default 0.0
     \note Effective conductance of frame
     \note Excludes air films
     \note Obtained from WINDOW 5 or other 2-D calculation
N5 , \field Ratio of Frame-Edge Glass Conductance to Center-Of-Glass Conductance
     \type real
     \minimum 1.0
     \maximum 4.0
     \default 1.0
     \note Excludes air films
     \note Obtained from WINDOW 5 or other 2-D calculation
N6 , \field Frame Solar Absorptance
     \type real
     \minimum 0.0
     \maximum 1.0
     \default 0.0
     \note Assumed same on outside and inside of frame
N7 , \field Frame Visible Absorptance
     \type real
     \minimum 0.0
     \maximum 1.0
     \default 0.0
     \note Assumed same on outside and inside of frame
N8 , \field Frame Thermal Hemispherical Emissivity
     \type real
     \minimum> 0.0
     \default 0.9
     \note Assumed same on outside and inside of frame
A2 , \field Divider Type
     \type choice
     \key DividedLite
     \key Suspended
N9 , \field Divider Width
     \units m
     \type real
     \minimum 0.0
     \default 0.0
     \note Width of dividers in plane of window
     \note Width assumed the same for all dividers
N10, \field Number of Horizontal Dividers
     \type real
     \minimum 0
     \default 0
     \note "Horizontal" means parallel to local window X-axis
N11, \field Number of Vertical Dividers
     \type real
     \minimum 0
     \default 0
     \note "Vertical" means parallel to local window Y-axis
N12, \field Divider Outside Projection
     \units m
     \type real
     \minimum 0.0
     \default 0.0
     \note Amount that divider projects outward from the outside face of the glazing
     \note Outside projection assumed the same for all divider elements
N13, \field Divider Inside Projection
     \units m
     \type real
     \minimum 0.0
     \default 0.0
     \note Amount that divider projects inward from the inside face of the glazing
     \note Inside projection assumed the same for all divider elements
N14, \field Divider Conductance
     \units W/m2-K
     \type real
     \minimum 0.0
     \default 0.0
     \note Effective conductance of divider
```

```
     \note Excludes air films
     \note Obtained from WINDOW 5 or other 2-D calculation
N15 ,\field Ratio of Divider-Edge Glass Conductance to Center-Of-Glass Conductance
     \type real
     \minimum 1.0
     \maximum 4.0
     \default 1.0
     \note Excludes air films
     \note Obtained from WINDOW 5 or other 2-D calculation
N16, \field Divider Solar Absorptance
     \type real
     \minimum 0.0
     \maximum 1.0
     \default 0.0
     \note Assumed same on outside and inside of divider
N17, \field Divider Visible Absorptance
     \type real
     \minimum 0.0
     \maximum 1.0
     \default 0.0
     \note Assumed same on outside and inside of divider
N18, \field Divider Thermal Hemispherical Emissivity
     \type real
     \minimum> 0.0
     \default 0.9
     \note Assumed same on outside and inside of divider
N19, \field Outside Reveal Solar Absorptance
     \type real
     \minimum 0.0
     \maximum 1.0
     \default 0.0
N20, \field Inside Sill Depth
     \units m
     \type real
     \minimum 0.0
     \maximum 2.0
     \default 0.0
N21, \field Inside Sill Solar Absorptance
     \type real
     \minimum 0.0
     \maximum 1.0
     \default 0.0
N22, \field Inside Reveal Depth
     \note Distance from plane of inside surface of glazing
     \note to plane of inside surface of wall.
     \note Outside reveal depth is determined from the geometry
     \note of the window and the wall it is on; it is non-zero if the plane of
     \note the outside surface of the glazing is set back from the plane of the
     \note outside surface of the wall.
     \units m
     \minimum 0.0
     \maximum 2.0
     \default 0.0
N23; \field Inside Reveal Solar Absorptance
     \real
     \minimum 0.0
     \maximum 1.0
     \default 0.0
```

An IDF example:

```
WindowFrameAndDivider,
    TestFrameAndDivider, ! Frame/Divider Name
    0.05, ! Frame Width
    0.04, ! Frame Outside Projection
    0.03, ! Frame Inside Projection
    5.0,  ! Frame Conductance
    1.3,  ! Ratio of Frame-Edge Glass Conductance to Center-Of-Glass Conductance
    0.8,  ! Frame Solar Absorptance
    0.8,  ! Frame Visible Absorptance
    0.9,  ! Frame Thermal Emissivity
    DividedLite, ! Divider Type
    0.03, ! Divider Width
    2,    ! Number of Horizontal Dividers
    2,    ! Number of Vertical Dividers
    0.03, ! Divider Outside Projection
    0.03, ! Divider Inside Projection
    5.0,  ! Divider Conductance
    1.3,  ! Ratio of Divider-Edge Glass Conductance to Center-Of-Glass Conductance
    0.8,  ! Divider Solar Absorptance
    0.8,  ! Divider Visible Absorptance
    0.9,  ! Divider Thermal Emissivity
    0.7,  ! Outside Reveal Solar Absorptance
    0.25, ! Inside Sill Depth (m)
    0.6,  ! Inside Sill Solar Absorptance
    0.2,  ! Inside Reveal Depth (m)
    0.5;  ! Inside Reveal Solar Absorptance
```

Importing Windows from WINDOW 5

The WINDOW 5 program calculates the U-value, Solar Heat Gain Coefficient, solar transmission/absorption characteristics, visible transmission characteristics and other properties of a window under standard indoor and outdoor conditions. WINDOW 5 treats the whole window system—glazing, frame and divider. A sub-program of WINDOW 5 called THERM uses a 2-D finite element calculation to determine the effective conductance of frame, divider and edge-of-glass elements. Another sub-program, OPTICS 5, determines the solar-optical properties of glazing, including laminates and coated glass.

WINDOW 5 writes a data file containing a description of the window that was analyzed. An example is shown below. This file, which should be renamed Window5DataFile.dat, can be read by EnergyPlus. It should be located in the same directory as the IDF file.

In this way, the same window that was created in WINDOW 5 can be imported into EnergyPlus for annual energy analysis without having to re-input the window data. To obtain WINDOW 5 go to http://windows.lbl.gov. A major advantage of using WINDOW 5 to create window input for EnergyPlus is that you will have direct access to WINDOW 5's expanding database of over 1000 different glass types; and you will be able to browse through this database according to different criteria (color, transmittance, solar heat gain coefficient, etc.) to help you select the best glass type for your application.

Although WINDOW 5 writes only one window entry on the WINDOW 5 data file, EnergyPlus users can combine two or more of these files to end up with a single WINDOW 5 data file with multiple window entries of different types. In this way a library of windows from WINDOW 5 can be built up if so desired. If you combine files like this you should be sure not to leave out or change any of lines from the original files.

Please note that there is a bug in WINDOW 5 that causes two of the lines in the EnergyPlus data file to be joined. This bug is fixed in versions of Window 5.02 (and above). To be sure, you can check the data file for a line that looks like:

```
GLAZING SYSTEM OPTICAL DATAAngle     0    10    20    30    40    50    60    70    80    90 Hemis
```

The fixed version of the program will not show the above line; rather, there will be two lines such as shown below. If you have the above condition, with an editor you would break this into two lines:

```
GLAZING SYSTEM OPTICAL DATA
Angle     0    10    20    30    40    50    60    70    80    90 Hemis
```

In EnergyPlus, the Window5 data file is searched for each "Construction from Window5 Data File" object in the EnergyPlus input. This object has a very simple form:

Construction from Window5 Data File,
ConstructionName;

If there is a window called ConstructionName on the Window5 data file, the data for that window is read from the file and the following EnergyPlus objects and their names are created. The "W5" prefixed to these names indicates that the object originated in the Window5 data file.

- **Material:Glass** for each of the glass layers. They will be named **W5:ConstructionName:GLASS1**, **W5:ConstructionName:GLASS2** , etc.
- **Material:Gas** or **Material:GasMixture** for each of the gap layers. They will be named **W5:ConstructionName:GAP1**, **W5:ConstructionName:GAP2** , etc.
- **WindowFrameAndDivider** (if the window on the Window5 data file has a frame and/or divider). It will be named **W5:ConstructionName**. This WindowFrameAndDivider will be assigned to any window on the input file that has a construction called "ConstructionName" *even if that window has referenced another WindowFrameAndDivider (i.e., if WindowFrameAndDivider Name for that window is specified).* In this case a warning will result.

Note that:

> An entry on the WINDOW 5 data file usually has just one glazing system. It is also possible to have an entry with two glazing systems separated by a horizontal or vertical mullion. In this case, the two glazing systems can have different dimensions and different properties. For example, one of the two glazing systems could be single glazed and the other could be double glazed. An example of the two glazing system case is given in the sample WINDOW 5 data file shown below (although in this case the properties of the two glazing systems are the same).

EnergyPlus handles the "one glazing system" and "two glazing systems" cases differently. If there is one glazing system, the glazing system height and width from the Window5 data file are not used. Instead, the window dimensions are obtained from the window vertices that have been specified on the IDF file. However, a warning message will result if the height or width calculated from the window's vertex inputs differs from the corresponding Window5 data file values by more than 10%. This warning is given since the effective frame and edge-of-glass conductances on the WINDOW 5 data file can depend on the window dimensions if the frame is non-uniform, i.e., consists of sections with different values of width, projection, or thermal properties.

If the WINDOW 5 data file entry has two glazing systems, System1 and System2, the following happens, as shown in the figure below. Assume that the original window is called WinOriginal. System1 is assigned to WinOriginal. Then EnergyPlus automatically creates a second window, called WinOriginal:2, and assigns System2 to it. The dimensions of WinOriginal are ignored; the dimensions of System1 on the data file are assigned to it, but the position of the lower left-hand vertex of WinOriginal is retained. The dimensions of System2 on the data file are assigned to WinOriginal:2. The lower left-hand vertex of WinOriginal:2 is determined from the mullion orientation and width.

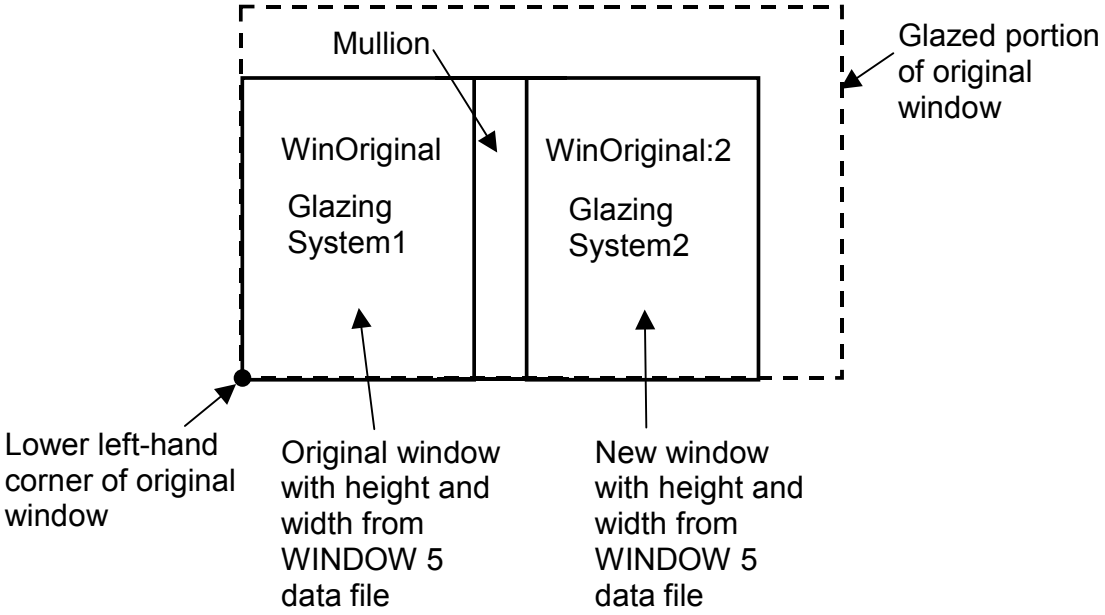

Figure 21. Window5 Glazing system with dual glazing constructions

The Window5 Data File contains no information on shading devices. See "Specify the Material Name of the Shading Device" under WindowShadingControl for a method to attach a shading layer to windows read in from this file.

Following is an example WINDOW 5 data file for a slider window with two identical double low-E glazing systems separated by a horizontal mullion. Each system has a frame and divider. Note that all dimensions, such as glazing height and width, are in millimeters; when EnergyPlus reads the file these are converted to meters. Following the data file example is a description of the contents of the file. That data used by EnergyPlus is shown in bold.

```
Window5 Data File for EnergyPlus
Window 5.0  v5.0.73
Date             : Tue Nov 13 17:07:40 2001
Window name      : DoubleLowE
Description      : Horizontal Slider, AA
# Glazing Systems: 2
GLAZING SYSTEM DATA: Height Width nPanes Uval-center SC-center SHGC-center Tvis-center
 System1         :   1032   669      2      1.660      0.538      0.467       0.696
 System2         :   1033   669      2      1.660      0.538      0.467       0.696
FRAME/MULLION DATA: Width OutsideProj InsideProj Cond EdgeCondRatio SolAbs VisAbs Emiss  Orient'n (mull)
    L Sill       :   97.3     25.4       25.4   500.000    1.467     0.500  0.500  0.90
    R Sill       :   97.3     25.4       25.4   500.000    1.467     0.500  0.500  0.90
    L Head       :   70.2     25.4       25.4   18.822     1.490     0.500  0.500  0.90
    R Head       :   70.2     25.4       25.4   18.822     1.490     0.500  0.500  0.90
    Top L Jamb   :   54.3     25.4       25.4   31.141     1.503     0.500  0.500  0.90
    Bot L Jamb   :   54.3     25.4       25.4   500.000    1.494     0.500  0.500  0.90
    Top R Jamb   :   70.2     25.4       25.4   500.000    1.518     0.500  0.500  0.90
    Bot R Jamb   :   97.6     25.4       25.4   264.673    1.547     0.500  0.500  0.90
    Mullion      :   53.5     25.4       25.4   500.000    1.361     0.500  0.500  0.90 Horizontal
    Average frame:   75.5     25.4       25.4   326.149    1.464     0.500  0.500  0.90
DIVIDER DATA     : Width OutsideProj InsideProj Cond EdgeCondRatio SolAbs VisAbs Emiss Type            #Hor #Vert
 System1         :  25.4    25.4       25.4    3.068      1.191     0.500  0.500 0.900 DividedLite       2    3
 System2         :  25.4    25.4       25.4    3.068      1.191     0.500  0.500 0.900 DividedLite       2    3
GLASS DATA       : Layer#  Thickness  Cond Tsol Rfsol Rbsol Tvis Rfvis Rbvis  Tir  EmissF  EmissB  SpectralDataFile
 System1         :   1      3.00     0.900 0.50  0.33  0.39 0.78  0.16  0.13 0.00   0.16    0.13   CMFTIR_3.AFG
                     2      6.00     0.900 0.77  0.07  0.07 0.88  0.08  0.08 0.00   0.84    0.84   CLEAR_6.DAT
 System2         :   1      3.00     0.900 0.50  0.33  0.39 0.78  0.16  0.13 0.00   0.16    0.13   CMFTIR_3.AFG
                     2      6.00     0.900 0.77  0.07  0.07 0.88  0.08  0.08 0.00   0.84    0.84   CLEAR_6.DAT
GAP DATA         : Gap# Thick nGasses
 System1         :   1  12.70    1
 System2         :   1  12.70    1
GAS DATA         : GasName Fraction MolWeight ACond   BCond  CCond AVisc   BVisc   CVisc ASpHeat  BSpHeat CSpHeat
 System1 Gap1    : Air     1.0000   28.97    0.002873 7.76e-5 0.0 3.723e-6 4.94e-8 0.0   1002.737 0.012324 0.0
 System2 Gap1    : Air     1.0000   28.97    0.002873 7.76e-5 0.0 3.723e-6 4.94e-8 0.0   1002.737 0.012324 0.0
GLAZING SYSTEM OPTICAL DATA
Angle     0    10    20    30    40    50    60    70    80    90 Hemis
System1
Tsol  0.408 0.410 0.404 0.395 0.383 0.362 0.316 0.230 0.106 0.000 0.338
Abs1  0.177 0.180 0.188 0.193 0.195 0.201 0.218 0.239 0.210 0.001 0.201
Abs2  0.060 0.060 0.061 0.061 0.063 0.063 0.061 0.053 0.038 0.000 0.059
Rfsol 0.355 0.350 0.348 0.350 0.359 0.374 0.405 0.478 0.646 0.999 0.392
Rbsol 0.289 0.285 0.283 0.282 0.285 0.296 0.328 0.411 0.594 1.000 0.322
Tvis  0.696 0.700 0.690 0.677 0.660 0.625 0.548 0.399 0.187 0.000 0.581
Rfvis 0.207 0.201 0.198 0.201 0.212 0.234 0.278 0.374 0.582 0.999 0.260
Rbvis 0.180 0.174 0.173 0.176 0.189 0.215 0.271 0.401 0.648 1.000 0.251
System2
Tsol  0.408 0.410 0.404 0.395 0.383 0.362 0.316 0.230 0.106 0.000 0.338
Abs1  0.177 0.180 0.188 0.193 0.195 0.201 0.218 0.239 0.210 0.001 0.201
Abs2  0.060 0.060 0.061 0.061 0.063 0.063 0.061 0.053 0.038 0.000 0.059
Rfsol 0.355 0.350 0.348 0.350 0.359 0.374 0.405 0.478 0.646 0.999 0.392
Rbsol 0.289 0.285 0.283 0.282 0.285 0.296 0.328 0.411 0.594 1.000 0.322
Tvis  0.696 0.700 0.690 0.677 0.660 0.625 0.548 0.399 0.187 0.000 0.581
Rfvis 0.207 0.201 0.198 0.201 0.212 0.234 0.278 0.374 0.582 0.999 0.260
Rbvis 0.180 0.174 0.173 0.176 0.189 0.215 0.271 0.401 0.648 1.000 0.251
```

Description of Contents of Window5 Data File

(Quantities used in EnergyPlus are in bold; others are informative only)

Second line = version of WINDOW5 used to create the data file
Date = date the data file was created
Window name = name of this window; chosen by WINDOW5 user; EnergyPlus user enters the same name in EnergyPlus as name of a "Construction from Window5 Data File" object. EnergyPlus will search the Window5 data file for an entry of this name.
Description = One-line description of the window; this is treated as a comment.
 # Glazing Systems: 1 or 2; value is usually 1 but can be 2 if window has a horizontal or vertical mullion that separates the window into two glazing systems that may or may not be different.

GLAZING SYSTEM DATA
System1, System2: separate characteristics given if window has a mullion.
Height, ****width*** = height and width of glazed portion (i.e., excluding frame; and, if mullion present, excluding mullion).
nPanes = number of glass layers
Uval-center = center-of-glass U-value (including air films) under standard winter conditions* (W/m2)
SC-center = center-of-glass shading coefficient under standard summer conditions*.
SHCG-center = center-of-glass solar heat gain coefficient under standard summer conditions*.
Tvis-center = center-of-glass visible transmittance at normal incidence

FRAME/MULLION DATA
L,R Sill = left, right sill of frame
L,R Head = left, right header of frame
Top L, Bot L jamb = top-left, bottom-left jamb of frame
Bot L, Bot R jamb = bottom-left, bottom-right jamb of frame
Average frame = average characteristics of frame for use in EnergyPlus calculation. If mullion is present, original window is divided into two separate windows with the same average frame (with the mullion being split lengthwise and included in the average frame).
Width = width (m)
OutsideProj = amount of projection from outside glass (m)
InsideProj = amount of projection from inside glass (m)
Cond = effective surface-to-surface conductance (from THERM calculation) (W/m2)
EdgeCondRatio = ratio of surface-to-surface edge-of-glass conductance to surface-to-surface center-of-glass conductance (from THERM calculation)
SolAbs = solar absorptance
VisAbs = visible absorptance
Emiss = hemispherical thermal emissivity
Orientation = Horizontal or Vertical (mullion only); = None if no mullion.

DIVIDER DATA
Width through ***Emiss*** are the same as for FRAME/MULLION DATA
#Hor = number of horizontal dividers
#Vert = number of vertical dividers
Type = DividedLite or Suspended

GLASS DATA
System1, System2: separate characteristics are given if window has a mullion.
Cond = conductivity (W/m-K)
Tsol = spectral-average solar transmittance at normal incidence
Rfsol = spectral-average front solar reflectance at normal incidence
Rbsol = spectral-average back solar reflectance at normal incidence
Tvis = spectral-average visible transmittance at normal incidence
Rfvis = spectral-average front visible reflectance at normal incidence
Rbvis = spectral-average back visible reflectance at normal incidence
Tir = hemispherical IR transmittance
EmissF = hemispherical front emissivity
EmissB = hemispherical back emissivity

```
SpectralDataFile = name of spectral data file with wavelength-dependent transmission and
reflection data used by WINDOW 5 to calculate the glazing system optical data. "None" will
appear here if spectral-average data for this glass layer were used by WINDOW 5.

GAP DATA
System1, System2: separate characteristics are given if the window has a mullion.
Thick      = thickness (m)
nGasses  = number of gasses (1, 2 or 3)
GasName    = name of the gas
Fraction  = fraction of the gas
MolecWeight = molecular weight of the Nth gas
(In the following, conductivity, viscosity and specific heat as a function
of temperature, T (deg K), are expressed as A + B*T + C*T^2)
ACond      = A coeff of conductivity (W/m-K)
BCond      = B coeff of conductivity (W/m-K^2)
CCond      = C coeff of conductivity (W/m-K^3)
AVisc      = A coeff of viscosity (g/m-s)
BVisc      = B coeff of viscosity (g/m-s-K)
CVisc      = C coeff of viscosity (g/m-s-K^2)
ASpHeat    = A coeff of specific heat (J/kg-K)
BSpHeat    = B coeff of specific heat (J/kg-K^2)
CSpHeat    = C coeff of specific heat (J/kg-K^3)

GLAZING SYSTEM OPTICAL DATA
System1, System2: separate characteristics are given if the window has a mullion.
Hemisph    = hemispherical (i.e., diffuse)
Tsol       = solar transmittance vs. angle of incidence
AbsN       = solar absorptance of Nth layer vs. angle of incidence
Rfsol      = front solar reflectance vs. angle of incidence
Rbsol      = back solar reflectance vs. angle of incidence
Tvis       = visible transmittance vs. angle of incidence
Rfvis      = front visible reflectance vs. angle of incidence
Rbvis     = back visible reflectance vs. angle of incidence
-------------------------------------------------------
*Standard conditions are
  Winter:
  Inside air temperature = 21.1C (70F)
  Outside air temperature = -17.8C (0F)
  Wind speed = 6.71 m/s (15 mph)
  No solar radiation

  Summer:
  Inside air temperature = 23.9C (75F)
  Outside air temperature = 31.7C (89F)
  Wind speed = 3.35 m/s (7.5 mph)
  783 W/m2 (248 Btu/h-ft2) incident beam solar radiation normal to glazing
```

Other Side Coefficients

By referencing the Other Side Coefficients statement in the surface statements (i.e. Outside Face Environment), the temperature of the outer plane of a surface (see Figure 22) can be directly controlled. Other side coefficients can also be used to control the exterior convective heat transfer coefficient of a surface and the corresponding exterior air temperature. It should be noted that solar effects are not accounted for when other side coefficients are used. In addition, if other side coefficients are specified for a surface, they also hold for subsurfaces of that surface (though subsurfaces can have their own coefficient set).

Other side coefficients have the same effect on all types of heat transfer surfaces. In other words, an interior surface with other side coefficients specified and an exterior wall with identical other side coefficients specified are simulated exactly the same. A surface that uses other side coefficients should be thought of as a new or separate type of surface. All heat

transfer surfaces are simulated in the same manner through conduction transfer functions. The only difference between the various types of heat transfer surfaces is the environment on the other side of the surface. For example, the other side environment of an exterior surface is the outdoor environment. For an interior surface, the temperature of the outer plane of the surface is set equal to the temperature of the inner plane of the surface. Similarly, a surface with other side coefficients specified will allow the user to control the other side environment.

```
OtherSideCoefficients,
  A1, \field OtherSideCoeff Name
      \reference OSCNames
  N1, \field Combined convective/radiative film coefficient
      \note if=0, use other coefficients
      \type real
  N2, \field User selected Constant Temperature
      \units C
      \type real
  N3, \field Coefficient modifying the user selected constant temperature
  N4, \field Coefficient modifying the external dry bulb temperature
      \type real
  N5, \field Coefficient modifying the ground temperature
      \type real
  N6, \field Coefficient modifying the wind speed term (s/m)
      \type real
  N7; \field Coefficient modifying the zone air temperature part of the equation
      \type real
```

Heat transfer through a surface is an extremely important component in the calculation of zone loads. The information to calculate this heat transfer is readily available if the surface is exposed to the outdoor environment or to another zone that is being simulated. Occasionally, a user will want to model the heat transfer through a surface that is adjacent to an area that is not included in the EnergyPlus model. For example, an office area is attached to a warehouse and the user is only interested in simulating the office area. An interior surface with other side coefficients specified could be used to control the environment on the other side of the surface, thereby accounting for the heat transfer through the adjoining surface.

Other Side Coefficients affects the "other side" of a surface as described below. Each coefficient has a special meaning. You may enter a 0 or blank if you are not using a particular coefficient. Note that there are two potential ways to use other side coefficients. Either they are used to set the temperature of the exterior side surface directly (if the combined convective/radiative coefficient below is less than or equal to zero) or to set both the film coefficient (positive value for the combined convective/radiative coefficient below) and the outside air temperature.

Field: OtherSideCoeff Name

This, of course, is the string referenced in the Surface statement that is using OtherSideCoeff as the Exterior Environment.

Field: Combined convective/radiative film coefficient

This is a trigger value. If the value is greater than zero, then it is taken to be the combined convective/radiative film coefficient. In this case (value > 0), the remaining fields are used first to calculate the outside air temperature for the surface and then to calculate the outside surface temperature based on the outside air temperature and the film coefficient. If this field is less than or equal to zero, then the remaining fields are used to calculate the surface temperature (not the outside air temperature). The units for this field are the same as for a convective heat transfer coefficient: $W/(m^2*K)$. This is referred to as “C1” in the reference below.

Field: User selected constant temperature

This field is used to define a temperature that remains a constant part of the calculation either of the surface or outside air temperature. This parameter is shown as “C5” in the equation below. The units for this parameter are C.

Field: Coefficient modifying the user selected constant temperature

This field is used to define a temperature that remains a constant coefficient that is applied to the constant temperature (see previous field). This parameter is shown as “C4” in the equation below. This parameter is dimensionless.

Field: Coefficient modifying the external dry bulb temperature

This field is used to define a temperature that remains a constant coefficient that is applied to the outside air dry bulb temperature. This parameter is shown as “C3” in the equation below. This parameter is dimensionless.

Field: Coefficient modifying the ground temperature

This field is used to define a temperature that remains a constant coefficient that is applied to the ground temperature. This parameter is shown as “C6” in the equation below. This parameter is dimensionless.

Field: Coefficient modifying the wind speed term

This field is used to define a temperature that remains a constant coefficient that is applied to the product of the outside air dry bulb temperature and the wind speed. This parameter is shown as “C7” in the equation below. This parameter has dimensions of inverse velocity or s/m.

Field: Coefficient modifying the zone air temperature part of the equation

This field is used to define a temperature that remains a constant coefficient that is applied to the temperature of the zone to which this surface belongs. This parameter is shown as “C2” in the equation below. This parameter is dimensionless.

The coefficients listed above are used in the following equation:

$$T = C2 * Tzone + C3 * Toadb + C4 * C5 + C6 * Tgrnd + C7 * Wspd * Toadb$$

where:

Tzone = Temperature of the zone being simulated (°C)

Toadb = Dry bulb temperature of the outdoor air (°C)

Tgrnd = Temperature of the ground (°C)

Wspd = Outdoor wind speed (m/sec)

If C1 is greater than zero, C1 is the external convective heat transfer coefficient, and T is the surrounding air temperature. Otherwise, T is the temperature of the outer plane of the surface.

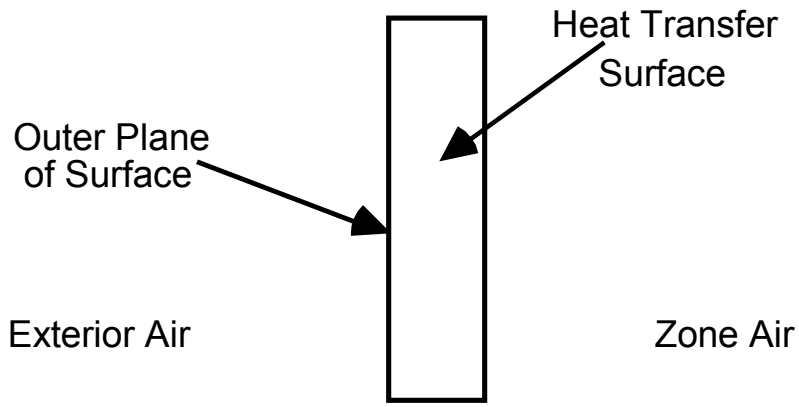

Figure 22. Illustration for Other Side Coefficients

```
OtherSideCoefficients, OSCCoef:Zn005:Wall003, !- OSC Name
 !  Example input for second ground temperature
0.0000000E+00,  !- OSC SurfFilmCoef
   0.000000    ,  !- OSC Temp
   0.000000    ,  !- OSC Temp Coef
   0.000000    ,  !- OSC dry-bulb
   0.500000    ,  !- OSC GrndTemp
   0.000000    ,  !- OSC WindSpdCoef
   0.000000    ;  !- OSC ZoneAirTemp
 OtherSideCoefficients, OSCCoef:Zn005:Wall004, !- OSC Name
 !  Example input for outside heat transfer coefficient of 1.23, using Tosdb
   1.230000    ,  !- OSC SurfFilmCoef
   0.000000    ,  !- OSC Temp
   0.000000    ,  !- OSC Temp Coef
   1.000000    ,  !- OSC dry-bulb
   0.000000    ,  !- OSC GrndTemp
   0.000000    ,  !- OSC WindSpdCoef
   0.000000    ;  !- OSC ZoneAirTemp
```

Movable Insulation

Movable insulation can be used/scheduled on any surface regular surface (such as a wall, floor, roof, etc.) but not on a subsurface (such as a window). With movable insulation, no reference is made in the surface that is using the insulation – rather the movable insulation statement references the surface to which it is applied.

Exterior movable insulation has undergone some testing and appears to producing expected results. At the modification of this section of the Input/Output Reference (April 2002), interior movable insulation has not yet been tested. The underlying principle has been implemented in EnergyPlus for both interior and exterior movable insulation with the possibility for exterior movable insulation to be transparent (transparent insulation material or TIM). Basically, the addition of movable insulation allows the user to schedule an extra amount of insulation on either the inside or outside surface of a wall (or both). The insulation must be a simple, homogenous material layer (linked to a material definition within the input data file). Note that EnergyPlus allows the exterior movable insulation layer to be transparent to short wavelength radiation (solar). In this case, incident solar is split between the plane between the movable insulation and the surface and the plane between the movable insulation and the surrounding air. This calculation is fairly basic and based on the solar transmittance of the insulation layer (material properties). Using transparent layers for exterior movable insulation allows solar energy to penetrate deeper into a construction where it can be stored for later use in the building (similar in concept to a Trombe Wall).

Field: Insulation Type

This field determines whether the movable insulation is applied to the inside or the outside of the surface by entering either “Interior” or “Exterior”, respectively.

Field: SurfaceName

This field refers the movable insulation back to a particular surface (ref: Surface:HeatTransfer) via its user assigned name so that EnergyPlus knows where to apply this extra layer of insulation. This will affect either the inside or outside surface heat balance of this surface depending on the value in the insulation type field (see previous field).

Field: MaterialMovInsul

This field refers to a material layer (ref: Material:Regular, Material:Regular-R, or Material:WindowGlass; transparent layers are only valid for exterior movable insulation) via its user assigned name. This provides the program with a full complement of material properties so that the effect of the insulation (R-value and solar transmittance) can be correctly taken into account by EnergyPlus.

Field: SchedMovInsul

This field is a schedule that theoretically can be any positive real number but was originally intended to be a parameter between 0.0 and 1.0. Its purpose is to act as a fractional modifier on the resistance of the material layer. The actual thermal resistance of the movable insulation is equal to the resistance of the material layer times the current value in the movable insulation schedule. A value of 0.0 simply means that the movable insulation is not present.

The IDD description of movable insulation is as follows:

```
MovableInsulation,
      \memo Exterior or Interior Insulation on surfaces
  A1, \field Insulation Type
      \type choice
      \key Exterior
      \key Interior
  A2, \field SurfaceName
      \type object-list
      \object-list SurfaceNames
  A3, \field MaterialMovInsul- Name of the material used for movable insulation
  A4; \field SchedMovInsul-Schedule for movable insulation
       \type object-list
       \object-list ScheduleNames
```

An example of this syntax implemented in an input file is:

```
MovableInsulation,
  Exterior,                     ! Insulation Type
  Zone001:Wall001,              ! Surface Name
  TransparentInsulationMaterial, ! Name of the material used for movable insulation
  PresentInWinterSchedule;      ! Schedule for movable insulation
```

Zone Thermal Output(s)

In addition to the canned Surface reports (view the Reports section later in this document) and surface variables (above), the following variables are available for all zones:

```
Zone,Sum,Zone-Total Latent Gain[J]
Zone,Sum,Zone-Total Radiant Heat Gain[J]
Zone,Sum,Zone-Total Convective Heat Gain[J]
Zone,Sum,Zone-Total Lost Heat Gain[J]
Zone,Sum,Zone-Total Electric Consumption[J]
Zone,Average,Mean Air Temperature[C]
HVAC,Average,Zone/Sys Air Temp[C]
Zone,Average,Mean Radiant Temperature[C]
HVAC,Sum,Zone/Sys Sensible Heating Energy[J]
HVAC,Sum,Zone/Sys Sensible Cooling Energy[J]
HVAC,Average,Zone/Sys Sensible Heating Rate[W]
HVAC,Average,Zone/Sys Sensible Cooling Rate[W]
HVAC,Average,Zone Air Humidity Ratio[]
```

Two of these are of particular interest:

```
Zone,Average,Mean Air Temperature[C]
HVAC,Average,Zone/Sys Air Temp[C]
```

These two variable outputs are/should be identical. However, note that they can be reported at different time intervals. "Mean Air Temperature" is only available on the Zone/HB time step (Time Steps in Hour) whereas "Zone/Sys Air Temp" can be reported at the HVAC time step (which can vary).

Field: Mean Air Temperature[C]

From the code definition, the mean air temperature (zone) is the average temperature of the air temperatures at the system time step. Remember that the zone heat balance represents a "well stirred" model for a zone, therefore there is only one mean air temperature to represent the air temperature for the zone.

Field: Zone/Sys Air Temp[C]

This is very similar to the mean air temperature in the last field. The "well stirred" model for the zone is the basis, but this temperature is also available at the "detailed" system time step.

Field: Mean Radiant Temperature[C]

Field: Zone/Sys Sensible Heating Energy[J]

Field: Zone/Sys Sensible Cooling Energy[J]

Field: Zone/Sys Sensible Heating Rate[W]

Field: Zone/Sys Sensible Cooling Rate[W]

Field: Zone Air Humidity Ratio[]

Field: Zone-Total Latent Gain[J]

This field represents the sum of latent gains throughout the zone in joules. This includes latent gain from People, Electric Equipment, Gas Equipment, Other Equipment, Hot Water Equipment, and Steam Equipment.

Field: Zone-Total Radiant Heat Gain[J]

This field represents the sum of radiant gains throughout the zone in joules. This includes radiant gain from People, Lights, Electric Equipment, Gas Equipment, Other Equipment, Hot Water Equipment, and Steam Equipment.

Field: Zone-Total Convective Heat Gain[J]

This field represents the sum of convective gains throughout the zone in joules. This includes convective gain from People, Lights, Electric Equipment, Gas Equipment, Other Equipment, Hot Water Equipment, and Steam Equipment.

Field: Zone-Total Lost Heat Gain[J]

This field represents the sum of "lost" gains throughout the zone in joules. This includes lost heat gain from Electric Equipment, Gas Equipment, Other Equipment, Hot Water Equipment, and Steam Equipment.

Field: Zone-Total Electric Consumption[J]

This field represents the sum of electric conusumption throughout the zone in joules. This includes the electric consumption from Lights, Electric Equipment, and Outdoor Temperature Controlled Baseboard Heat This value will also be reflected in the Electric meters for the Zone, Building, and Facility..

Group – Space Gains

Not all the influence for energy consumption in the building is due to envelope and ambient conditions. This group of objects describes other internal gains that may come into play (People, Lights, Various Equipment Types).

People

The people statement is used to model the occupant's affect on the space conditions. The following definition addresses the basic affects as well as providing information that can be used to report the thermal comfort of a group of occupants. Both the Fanger and the Pierce Two-Node thermal comfort models are available in EnergyPlus. A user may select one or both of these models for each People statement by simply adding the appropriate choice keyword after the air velocity schedule name. Thermal comfort calculations will only be made for people statements that request them.

Field: Zone Name

This field is the name of the zone (ref: Zone) and attaches a particular people statement to a thermal zone in the building.

Field: Number of People

This field is typically used to represent the maximum number of people in a zone that is then multiplied by a schedule fraction (see next field). In EnergyPlus, this is slightly more flexible in that the number of people could be a "diversity factor" applied to a schedule of real numbers. Note that while the schedule value can vary from hour to hour, the number of people field is constant for all simulation environments.

Field: Number of People Schedule Name

This field is the name of the schedule (ref: Schedule) that modifies the number of people parameter (see previous field). The schedule values can be any positive number. The actual number of people in a zone as defined by this statement is the product of the number of people field and the value of the schedule specified by name in this field.

Field: Fraction Radiant

This field is a decimal number between 0.0 and 1.0 and is used to characterize the type of heat being given off by people in a zone. The number specified in this field will be multiplied

by the total sensible energy emitted by people to give the amount of long wavelength radiation gain from human beings in a zone. The remainder of the sensible load is assumed to be convective heat gain. Note that latent gains from people are not included in either the radiant or convective heat gains. See the Engineering Reference document for more details.

Field: Activity Level Schedule Name

This field is the name of the schedule (ref: Schedule) that determines the amount of heat gain per person in the zone under design conditions. This value is modified somewhat based on a correlation to account for variations in space temperature. The schedule values may be any positive number and the units for this parameter is Watts per person. This schedule represents the total heat gain per person including convective, radiant, and latent. An internal algorithm is used to determine what fraction of the total is sensible and what fraction is latent. Then, the sensible portion is divided into radiant and convective portions using the value specified for Fraction Radiant (above). See the Engineering Reference document for more details.

Values for activity level can range anywhere from approximately 100-150 Watts per person for most office activities up to over 900 Watts per person for strenuous physical activities such as competitive wrestling. Application specific values can be obtained from the ASHRAE Handbook of Fundamentals, Chapter 8 (Thermal Comfort), Table 5 "Typical Metabolic Heat Generation for Various Activities". Some examples are included in the following table. Heat flux values listed by ASHRAE can be converted to Watts by assuming that an average adult has a surface area of 1.8 square meters.

Table 3. Metabolic Rates for Various Activities

Activity	W/m^2	met
Resting		
Sleeping	40	0.7
Reclining	45	0.8
Seated, quiet	60	1.0
Standing, relaxed	70	1.2
Walking (on level surface)		
3.2 km/h (0.9 m/s)	115	2.0
4.3 km/h (1.2 m/s)	150	2.6
6.4 km/h (1.8 m/s)	220	3.8
Office Activities		
Reading, seated	55	1.0
Writing	60	1.0
Typing	65	1.1
Walking about	100	1.7
Miscellaneous Occupational Activities		
Cooking	95 to 115	1.6 to 2.0
Housecleaning	115 to 200	2.0 to 3.4
Machine work		
sawing (table saw)	105	1.8
light (electrical industry)	115 to 140	2.0 to 2.4
Heavy	235	4.0
Miscellaneous Leisure Activities		

Dancing, social	140 to 255	2.4 to 4.4
Calisthenics/exercise	175 to 235	3.0 to 4.0
Tennis, singles	210 to 270	3.6 to 4.0
Basketball	290 to 440	5.0 to 7.6
Wrestling, competitive	410 to 505	7.0 to 8.7

Note that one met = 58.1 W/m^2

Field: People Group Name

This field is a name that may be different from the zone name to clarify reporting output. This identifier can be used to distinguish between multiple people statements in a single zone. The identifying name will show up in the EnergyPlus output files to assist the user in interpreting output.

Field: MRT Calculation Type

This field specifies the type of MRT calculation the user wishes to use for the thermal comfort model. At the present time, there are two options for MRT calculation type: zone averaged and surface weighted. The default calculation is “Zone Averaged”. In the zone averaged MRT calculation, the MRT used for the thermal comfort calculations is for an “average” point in the zone. MRT is calculated based on an area-emissivity weighted average of all of the surfaces in the zone. In cases where the emissivity of all of the surfaces are sufficiently small (near zero), the mean radiant temperature will be set to the mean air temperature of the space to avoid divide by zero errors. The other MRT calculation type is “Surface Weighted”. The goal of this calculation type is to estimate a person in the space close to a particular surface without having to define exact view factors for all of the surfaces and the location of the person in the space. The MRT used in the thermal comfort calculations when the “surface weighted” calculation type is selected is actually the average of the temperature of the surface to which the person is closest (defined by the next field “Surface Name”) and the zone averaged MRT (defined above). The surface temperature alone is not used because in theory the maximum view factor from a person to any flat surface is roughly 0.5. In the “surface weighted” calculation, the surface in question actually gets slightly more weighting than 50% since the surface selected is still a part of the zone average MRT calculation. Again, this simplification was made to avoid the specification of view factors and the exact location of the person.

Field: Surface Name

This field is only valid when the user selects “surface weighted” for the MRT calculation type (see the previous input field description). In this case, the field is the name of a surface (ref: Surface) within the zone the people are residing. This surface will be used in the MRT calculation as defined above to come up with a more representative MRT for a person near a particular surface. The MRT used for thermal comfort calculations using the “surface weighted” MRT calculation method is the average of the temperature of the surface specified in this field and the “zone averaged” MRT (see the MRT calculation type field above).

Field: Work Efficiency Schedule Name

This field is the name of the schedule (ref: Schedule) that determines the efficiency of energy usage within the human body that will be used for thermal comfort calculations. Note that all energy produced by the body is assumed to be converted to heat for the zone heat balance calculation. A value of zero corresponds to all of the energy produced in the body being converted to heat. A value of unity corresponds to all of the energy produced in the body being converted to mechanical energy. The values for this parameter defined in the schedule

must be between 0.0 and 1.0. Any value greater than zero will result in a reduction of heat that impacts the thermal comfort energy balance of a person within the space.

Field: Clothing Insulation Schedule Name

This field is the name of the schedule (ref: Schedule) that defines the amount of clothing being worn by a typical zone occupant during various times in the simulation period. This parameter must be a positive real number and has units of Clo.

Field: Air Velocity Schedule Name

This field is the name of the schedule (ref: Schedule) that approximates the amount of air movement in the space as a function of time throughout the simulation period. The user has control over this parameter through the schedule that requires the individual numbers in the schedule to be positive real numbers having units of meters per second.

Field: Thermal Comfort Report Type (up to 3 allowed)

The final one to three fields are optional and are intended to trigger various thermal comfort models within EnergyPlus. By entering the keywords FANGER, PIERCE or KSU, the user signifies that either the Fanger, Pierce Two-Node or Kansas State UniversityTwo-Node Thermal Comfort Model results are requested from EnergyPlus for this particular people statement. Note that since up to three models may be specified, the user may opt to have EnergyPlus calculate the thermal comfort for people identified with this people statement using all three models if desired. Note that the KSU model is computationally intensive and may noticably increase the execution time of the simulation. For descriptions of the thermal comfort calculations, see the Engineering Reference document.

```
PEOPLE,
  A1 , \field Zone Name
       \type object-list
       \object-list ZoneNames
  N1 , \field Number of People
       \type real
       \minimum 0
  A2 , \field Number of People SCHEDULE Name (real--fraction)
       \type object-list
       \object-list ScheduleNames
  N2 , \field Fraction Radiant
       \type real
       \minimum 0.0
       \maximum 1.0
  A3 , \field Activity level SCHEDULE Name (units W/person, real)
              ! Note that W has to be converted to mets in TC routine
       \type object-list
       \object-list ScheduleNames
  A4 , \field PEOPLE Group Name
       \type alpha
       \reference PeopleGroups
       \note This Group Name is used only in Thermal Comfort Reporting.
       \note If used, then the remaining Thermal Comfort parameters must be entered.
       \note If left blank, then the Zone Name will be used.
  A5 , \field MRT Calculation Type
       \note optional (only required for thermal comfort runs)
       \type choice
       \key ZoneAveraged
       \key SurfaceWeighted
       \default ZoneAveraged
```

```
  A6 , \field Surface Name
       \type object-list
       \object-list SurfaceNames
       \note optional (only required for thermal comfort runs)
  A7 , \field Work Efficiency SCHEDULE Name (0.0-1.0,real)
       \type object-list
       \object-list ScheduleNames
       \note optional (only required for thermal comfort runs)
  A8 , \field Clothing Insulation SCHEDULE Name (real)
       \type object-list
       \object-list ScheduleNames
       \note optional (only required for thermal comfort runs)
  A9 , \field Air Velocity SCHEDULE Name (units m/s, real)
       \type object-list
       \object-list ScheduleNames
       \note optional (only required for thermal comfort runs)
  A10 , \field Thermal Comfort Report Type
       \type choice
       \key Fanger
       \key Pierce
       \key KSU
       \note optional (only required for thermal comfort runs)
  A11 , \field Thermal Comfort Report Type
       \type choice
       \key Fanger
       \key Pierce
       \key KSU
       \note optional (second thermal comfort report type)
  A12 ; \field Thermal Comfort Report Type
       \type choice
       \key Fanger
       \key Pierce
       \key KSU
       \note optional (third thermal comfort report type)
```

The following IDF example allows for a maximum of 31 people with scheduled occupancy of “Bldg Sch 5”, 60% radiant using an Activity Schedule of “Activity Sch”. The example allows for thermal comfort reporting.

```
PEOPLE, DORM ROOMS AND COMMON AREAS, ! Int Gain Type and Zone
   31.00000    ,  ! "Maximum" Number of People
   BLDG Sch   5,  ! Occupancy Schedule
  0.6000000    ,  ! Fraction Radiant
   Activity Sch,  ! Activity Level Schedule Name
    , ! Take default name for people (Zone Name)
   zoneaveraged,  ! MRT calculation type
    ,             ! Surface name
   Work Eff Sch,  ! Work Efficiency Schedule Name
   Clothing Sch,  ! Clothing Insulation Schedule
   Air Velo Sch,  ! Air Velocity Schedule
   FANGER      ,  ! Calculate Thermal Comfort Using Fanger Model
   PIERCE      ,  ! Calculate Thermal Comfort Using Pierce Model
   KSU         ;  ! Calculate Thermal Comfort Using KSU Model
```

A simpler example, without using the thermal comfort reporting option:

```
PEOPLE, DORM ROOMS AND COMMON AREAS, ! Int Gain Type and Zone
   31.00000    ,  ! "Maximum" Number of People
   BLDG Sch   5,  ! Occupancy Schedule
  0.6000000    ,  ! Fraction Radiant
   Activity Sch;  ! Activity Level Schedule Name
```

People Output

People specific outputs include:

```
Zone,Average,People-Number of Occupants[]
Zone,Sum,People-Radiant Heat Gain[J]
Zone,Sum,People-Convective Heat Gain[J]
Zone,Sum,People-Sensible Heat Gain[J]
Zone,Sum,People-Latent Heat Gain[J]
Zone,Sum,People-Total Heat Gain[J]
Zone,Average,FangerPMV
Zone,Average,PiercePMVET
Zone,Average,PiercePMVSET
Zone,Average,PierceDISC
Zone,Average,PierceTSENS
Zone,Average,KsuTSV
```

Field: People-Number of Occupants[]

This field is simply the number of people within the zone during the time step in question.

Field: People-Total Heat Gain[J]

This field is the total amount of heat gain from people within the zone in Joules. Derived from the activity level times the number of occupants, this is summed for each people object within a zone.

Field: People-Radiant Heat Gain[J]

This field is the amount of radiant heat gain from people within the zone in Joules. This is determined by the current sensible heat gain from people to the zone and the "Fraction Radiant" specified in the input. The radiant gains from people are distributed to the surfaces using an area weighting scheme.

Field: People-Convective Heat Gain[J]

This field is the amount of convective heat gain from people within the zone in Joules. This is determined by the current sensible heat gain from people to the zone and the "Fraction Radiant" specified in input. Note that the radiant and convective gains should add up to the sensible heat gain from people. The convective heat gain from people is added to the zone air heat balance directly.

Field: People-Sensible Heat Gain[J]

This field is the amount of sensible heat gain from people within the zone in Joules. This amount is based on the number of people in the space as well as the total amount of energy produced by a typical person defined by the activity schedule in the input. An internal algorithm (described in the Engineering Reference document) is used to determine what fraction of the total is sensible and what fraction is latent. The sensible plus the latent heat gain from people equals the total gain specified in the input.

Field: People-Latent Heat Gain[J]

This field is the amount of latent heat gain from people within the zone in Joules. This amount is based on the number of people in the space as well as the total amount of energy produced by a typical person defined by the activity schedule in the input. An internal algorithm is used to determine what fraction of the total is sensible and what fraction is latent. Details about this split are included in the Engineering Reference document.

Note for all Thermal Comfort reporting: Though the published values for thermal comfort "vote" have a discrete scale (e.g. –3 to +3 or –4 to +4), the calculations in EnergyPlus are carried out on a continuous scale and, thus, reporting may be "off the scale" with specific conditions encountered in the space. This is not necessarily an error in EnergyPlus – rather a different approach that does not take the "limits" of the discrete scale values into account.

Field: FangerPMV

This field is the "predicted mean vote" (PMV) calculated using the Fanger thermal comfort model.

Field: PiercePMVET

This field is the "predicted mean vote" (PMV) calculated using the effective temperature and the Pierce two-node thermal comfort model.

Field: PiercePMVSET

This field is the "predicted mean vote" (PMV) calculated using the "standard" effective temperature and the Pierce two-node thermal comfort model.

Field: PierceDISC

This field is the "discomfort index" calculated using the the Pierce two-node thermal comfort model.

Field: PierceTSENS

This field is the "thermal sensation index" (PMV) calculated using the Pierce two-node thermal comfort model.

Field: KsuTSV

This field is the "thermal sensation vote" (TSV) calculated using the KSU two-node thermal comfort model.

Lights

Field: Zone Name

This field is the name of the zone (ref: Zone) and attaches a particular lighting statement to a thermal zone in the building.

Field: Schedule Name

This field is the name of the schedule (ref: Schedule) that modifies the design level parameter for lighting (see next field). The schedule values can be any positive number. The actual electrical input for lighting in a zone as defined by this statement is the product of the design level field and the value of the schedule specified by name in this field.

Field: Design Level

This field (in Watts) is typically used to represent the maximum electrical input to lighting fixtures in a zone that is then multiplied by a schedule fraction (see previous field). In EnergyPlus, this is slightly more flexible in that the lighting design level could be a "diversity factor" applied to a schedule of real numbers. Note that while the schedule value can vary from hour to hour, the design level field is constant for all simulation environments.

Field: Return Air Fraction

This field is a decimal number between 0.0 and 1.0 and is used to characterize the way in which heat is being given off by lights in a zone. The number specified in this field will be multiplied by the total energy consumed by lights to give the amount of heat convected to the return air duct(s) serving the zone. The remainder of the electrical input from lights is broken into long and short wavelength radiant fractions with the next two parameters. The remaining portion of the electrical input is then assumed to be convected to the zone air. The

assumption that was made for this implementation was for no system mass flow, or system OFF, the energy is added back to the zone in the zone correct temperature step. When there is system mass flow, or system ON, the energy is added to the zone outlet node.

Field: Fraction Radiant

This field is a decimal number between 0.0 and 1.0 and is used to characterize the type of heat being given off by lights in a zone. The number specified in this field will be multiplied by the difference between the total energy consumed by lights and the amount of energy convected to the return air duct to give the amount of long wavelength radiation gain from lights in a zone.

Field: Fraction Visible

This field is a decimal number between 0.0 and 1.0 and is used to characterize the type of heat being given off by lights in a zone. The number specified in this field will be multiplied by the difference between the total energy consumed by lights and the amount of energy convected to the return air duct to give the amount of short wavelength radiation gain from lights in a zone.

Field: Fraction Replaceable

Used only if Daylighting:Simple is specified for the zone (ref: Daylighting:Simple). This field is a decimal number between 0.0 and 1.0 and is used to determine what fraction of the artificial (electrical) lighting defined by this statement could potentially be replaced by daylighting. This reduces the amount of electrical input to the lights within the space and lowers the resulting heat addition to the zone and surface heat balances due to electrical lighting.

Field: LightsEndUseKey

This field allows the user to specify which light statements electrical consumption will appear on the end use meters (see Report Meter command). Two options are available: “GeneralLights” and “TaskLights”. If this field is omitted or blank, the lights will be assigned to the “GeneralLights” End Use.

```
LIGHTS,
  A1 , \field Zone Name
       \type object-list
       \object-list ZoneNames
  A2 , \field SCHEDULE Name
       \type object-list
       \object-list ScheduleNames
  N1 , \field Design Level
       \units W
       \type real
       \minimum 0
  N2 , \field Return Air Fraction
       \type real
       \minimum 0.0
       \maximum 1.0
  N3 , \field Fraction Radiant
       \type real
       \minimum 0.0
       \maximum 1.0
  N4 , \field Fraction Visible
       \type real
       \minimum 0.0
       \maximum 1.0
  N5 , \field Fraction Replaceable
       \type real
       \minimum 0.0
       \maximum 1.0
  A3 ; \field LightsEndUseKey
       \note if blank will be GeneralLights
       \type choice
       \key TaskLights
       \key GeneralLights
```

An IDF example:

```
LIGHTS, DORM ROOMS AND COMMON AREAS, BLDG Sch   1,  ! Int Gain Type, Zone, and Schedule
   1247.648    ,  ! Design Level {w}
  0.0000000E+00,  ! Return Air Fraction
  0.4000000    ,  ! Fraction Radiant
  0.2000000    ,  ! Fraction Visible
  0.5000000    ;  ! Fraction Replaceable
```

Lights Output

Lights outputs are grouped according to use type (General Lights and Task Lights). Since the definitions are the same for both uses, they will be shown together in the following definitions.

```
General Lights Outputs
Zone,Sum,Lights-Return Air Heat Gain[J]
Zone,Sum,Lights-Radiant Heat Gain[J]
Zone,Sum,Lights-Convective Heat Gain[J]
Zone,Sum,Lights-Visible Heat Gain[J]
Zone,Sum,Lights-Total Heat Gain[J]
Zone,Sum,Lights-Electric Consumption[J]
Task Lights Outputs
Zone,Sum,TaskLights-Return Air Heat Gain[J]
Zone,Sum,TaskLights-Radiant Heat Gain[J]
Zone,Sum,TaskLights-Convective Heat Gain[J]
Zone,Sum,TaskLights-Visible Heat Gain[J]
Zone,Sum,TaskLights-Total Heat Gain[J]
Zone,Sum,TaskLights-Electric Consumption[J]
```

Field: Lights-Total Heat Gain[J]

Field: TaskLights-Total Heat Gain[J]

This field expresses the total gain from lights (using design level and schedule) in joules. Note that this will be reduced by an appropriate value if daylighitng is operational (and operating) in the space.

Field: Lights-Return Air Heat Gain[J]

Field: TaskLights-Return Air Heat Gain[J]

This field expresses the amount (using the design level, the schedule and the Return Air Fraction specified in the input) of heat gain in joules that is convected to the return air ducts serving the zone.

Field: Lights-Radiant Heat Gain[J]

Field: TaskLights-Radiant Heat Gain[J]

This field expresses the amount (using the design level, the schedule and the Fraction Radiant specified in the input) of heat gain in joules that is the calculated long wavelength radiation gain from lights in a zone. This calculation uses the total energy from lights and the fraction radiant to realize this value. The radiant gains (long wavelength) are distributed to the surfaces using an area weighting scheme.

Field: Lights-Visible Heat Gain[J]

Field: TaskLights-Visible Heat Gain[J]

This field expresses the amount (using the design level, the schedule and the Fraction Visible specified in the input) of heat gain in joules that is the calculated short wavelength radiation gain from lights in a zone. This calculation uses the total energy from lights and the fraction visible to realize this value. The visible gains (short wavelength) are distributed to the surfaces using an area weighting scheme.

Field: Lights-Convective Heat Gain[J]

Field: TaskLights-Convective Heat Gain[J]

If any fraction of the whole is left over after the inputs of Return Air Fraction, Fraction Radiant and Fraction Visible, this fraction is the convective heat gain. This field, then, expresses the amount (using design level, schedule, and “Fraction Convected”) of heat gain in joules that is convected to the Zone Air. The calculation uses the total energy from lights and the “fraction convected” to realize the value. The convective heat gain is added directly to the zone air heat balance.

Field: Lights-Electric Consumption[J]

Field: TaskLights-Electric Consumption[J]

This field is the same as the Lights-Total Heat Gain (above) in joules. However, this amount is also shown in the Electricity meters that are associated with the zone – Electricity:Facility, Electricity:Building, Electricity:Zone:<Zone Name>, and ZoneSource:Electricity. In addition, depending on use, it will show in the General Lights: Electricity and General Lights: Electricity: Zone :<Zone Name> or Task Lights: Electricity and Task Lights: Electricity :Zone: <Zone Name>.

Meters for Lights Outputs

As described in the Lights Outputs, values for lights will show up on the following meters:

Table 4. Distribution of Lights to Meters

Meter Name	Scope	Lights Specfics
Electricity:Facility	Entire Facility	All
Electricity:Building	All Zones	All
Electricity:Zone:<Zone Name>	Specific Zone	All
GeneralLights:Electricity	All Zones	General Lights Use
GeneralLights:Electricity:Zone:<Zone Name>	Specific Zone	General Lights Use
TaskLights:Electricity	All Zones	Task Lights Use
TaskLights:Electricity:Zone:<Zone Name>	Specific Zone	Task Lights Use
ZoneSource:Electricity	AllZones	All

Electric Equipment

Field: Zone Name

This field is the name of the zone (ref: Zone) and attaches a particular electric equipment statement to a thermal zone in the building.

Field: Schedule Name

This field is the name of the schedule (ref: Schedule) that modifies the design level parameter for electric equipment (see next field). The schedule values can be any positive number. The actual electrical input for equipment in a zone as defined by this statement is the product of the design level field and the value of the schedule specified by name in this field.

Field: Design Level

This field (in Watts) is typically used to represent the maximum electrical input to equipment in a zone that is then multiplied by a schedule fraction (see previous field). In EnergyPlus, this is slightly more flexible in that the electric equipment design level could be a “diversity factor” applied to a schedule of real numbers. Note that while the schedule value can vary from hour to hour, the design level field is constant for all simulation environments.

Field: Fraction Latent

This field is a decimal number between 0.0 and 1.0 and is used to characterize the way in which heat is being given off by electric equipment in a zone. The number specified in this field will be multiplied by the total energy consumed by equipment to give the amount of latent energy produced by the electric equipment. This energy affects the moisture balance within the zone. The remainder of the electrical input to equipment is assumed to be sensible energy that is broken into long wavelength radiant and “lost” fractions with the next two parameters. The remaining portion of the electrical input is then assumed to be convected to the zone air.

Field: Fraction Radiant

This field is a decimal number between 0.0 and 1.0 and is used to characterize the type of heat being given off by electric equipment in a zone. The number specified in this field will be multiplied by the difference between the total energy consumed by electric equipment and the

amount of energy converted to latent energy (see previous field) to give the amount of long wavelength radiation gain from electric equipment in a zone.

Field: Fraction Lost

This field is a decimal number between 0.0 and 1.0 and is used to characterize the type of heat being given off by electric equipment in a zone. The number specified in this field will be multiplied by the difference between the total energy consumed by electric equipment and the amount of energy converted to latent energy (see previous field) to give the amount of heat which is "lost" and does not impact the zone energy balances. This might correspond to electrical energy converted to mechanical work or heat that is vented to the atmosphere.

```
ELECTRIC EQUIPMENT,
  A1 , \field Zone Name
       \type object-list
       \object-list ZoneNames
  A2 , \field SCHEDULE Name
       \type object-list
       \object-list ScheduleNames
  N1 , \field Design Level
       \units W
       \type real
       \minimum 0
  N2 , \field Fraction Latent
       \type real
       \minimum 0.0
       \maximum 1.0
  N3 , \field Fraction Radiant
       \type real
       \minimum 0.0
       \maximum 1.0
  N4 ; \field Fraction Lost
       \type real
       \minimum 0.0
       \maximum 1.0
```

An IDF example:

```
ELECTRIC EQUIPMENT, DORM ROOMS AND COMMON AREAS, BLDG Sch   6,  ! Int Gain Type, Zone, and Schedule
   9210.921    ,  ! Design Level {w}
  0.0000000E+00,  ! Fraction Latent
  0.3000000    ,  ! Fraction Radiant
  0.0000000E+00;  ! Fraction Lost
```

Gas Equipment

Field: Zone Name

This field is the name of the zone (ref: Zone) and attaches a particular gas equipment statement to a thermal zone in the building.

Field: Schedule Name

This field is the name of the schedule (ref: Schedule) that modifies the design level parameter for gas equipment (see next field). The schedule values can be any positive number. The actual energy input for gas equipment in a zone as defined by this statement is the product of the design level field and the value of the schedule specified by name in this field.

Field: Design Level

This field (in Watts) is typically used to represent the maximum energy input to gas equipment in a zone that is then multiplied by a schedule fraction (see previous field). In

EnergyPlus, this is slightly more flexible in that the gas equipment design level could be a "diversity factor" applied to a schedule of real numbers. Note that while the schedule value can vary from hour to hour, the design level field is constant for all simulation environments.

Field: Fraction Latent

This field is a decimal number between 0.0 and 1.0 and is used to characterize the way in which heat is being given off by gas equipment in a zone. The number specified in this field will be multiplied by the total energy consumed by gas equipment to give the amount of latent energy produced by the gas equipment. This energy affects the moisture balance within the zone. The remainder of the energy input to gas equipment is assumed to be converted to sensible energy that is broken into long wavelength radiant and "lost" fractions with the next two parameters. The remaining portion of the energy input is then assumed to be convected to the zone air.

Field: Fraction Radiant

This field is a decimal number between 0.0 and 1.0 and is used to characterize the type of heat being given off by gas equipment in a zone. The number specified in this field will be multiplied by the difference between the total energy consumed by gas equipment and the amount of energy converted to latent energy (see previous field) to give the amount of long wavelength radiation gain from gas equipment in a zone.

Field: Fraction Lost

This field is a decimal number between 0.0 and 1.0 and is used to characterize the type of heat being given off by gas equipment in a zone. The number specified in this field will be multiplied by the difference between the total energy consumed by electric equipment and the amount of energy converted to latent energy (see previous field) to give the amount of heat which is "lost" and does not impact the zone energy balances. This might correspond to input energy converted to mechanical work or heat that is vented to the atmosphere.

```
GAS EQUIPMENT,
  A1 , \field Zone Name
       \type object-list
       \object-list ZoneNames
  A2 , \field SCHEDULE Name
       \type object-list
       \object-list ScheduleNames
  N1 , \field Design Level
       \units W
       \type real
       \minimum 0
  N2 , \field Fraction Latent
       \type real
       \minimum 0.0
       \maximum 1.0
  N3 , \field Fraction Radiant
       \type real
       \minimum 0.0
       \maximum 1.0
  N4 ; \field Fraction Lost
       \type real
       \minimum 0.0
       \maximum 1.0
```

An IDF example:

```
GAS EQUIPMENT, DORM ROOMS AND COMMON AREAS, BLDG Sch   2,  ! Int Gain Type, Zone, and Schedule
   29287.51    ,  ! Design Level {w}
  0.0000000E+00,  ! Fraction Latent
  0.3000000    ,  ! Fraction Radiant
  0.0000000E+00;  ! Fraction Lost
```

Other Equipment, Hot Water Equipment, Steam Equipment

In addition to Electric and Gas equipment types, Other (unspecified source), Hot Water and Steam equipment types are available. The definitions are the same as for GAS EQUIPMENT.

Electric, Gas, Other, Hot Water, Steam Equipment Output(s)

The equipment types have identical reporting except for “type”.

```
Zone,Sum, <Equipment Type>-Total Heat Gain[J]
Zone,Sum, <Equipment Type>-Radiant Heat Gain[J]
Zone,Sum, <Equipment Type>-Convective Heat Gain[J]
Zone,Sum, <Equipment Type>-Latent Heat Gain[J]
Zone,Sum, <Equipment Type>-Lost Heat Gain[J]
Zone,Sum, <Equipment Type>-Consumption[J]
```

Where <Equipment Type> is: **Electric Eq** for Electric Equipment, **Gas Eq** for Gas Equipment, **Other Eq** for Other Equipment, **HotWater Eq** for Hot Water Equipment, **Steam Eq** for Steam Equipment

Complete Listing

```
Electric Equipment
Zone,Sum,Electric Eq-Total Heat Gain[J]
Zone,Sum,Electric Eq-Radiant Heat Gain[J]
Zone,Sum,Electric Eq-Convective Heat Gain[J]
Zone,Sum,Electric Eq-Latent Heat Gain[J]
Zone,Sum,Electric Eq-Lost Heat Gain[J]
Zone,Sum,Electric Eq-Consumption[J]
Gas Equipment
Zone,Sum,Gas Eq-Total Heat Gain[J]
Zone,Sum,Gas Eq-Radiant Heat Gain[J]
Zone,Sum,Gas Eq-Convective Heat Gain[J]
Zone,Sum,Gas Eq-Latent Heat Gain[J]
Zone,Sum,Gas Eq-Lost Heat Gain[J]
Zone,Sum,Gas Eq-Consumption[J]
Other Equipment
Zone,Sum,Other Eq-Total Heat Gain[J]
Zone,Sum,Other Eq-Radiant Heat Gain[J]
Zone,Sum,Other Eq-Convective Heat Gain[J]
Zone,Sum,Other Eq-Latent Heat Gain[J]
Zone,Sum,Other Eq-Lost Heat Gain[J]
Zone,Sum,Other Eq-Consumption[J]
Hot Water Equipment
Zone,Sum,Hot Water Eq-Total Heat Gain[J]
Zone,Sum,Hot Water Eq-Radiant Heat Gain[J]
Zone,Sum,Hot Water Eq-Convective Heat Gain[J]
Zone,Sum,Hot Water Eq-Latent Heat Gain[J]
Zone,Sum,Hot Water Eq-Lost Heat Gain[J]
Zone,Sum,Hot Water Eq-Consumption[J]
Steam Equipment
Zone,Sum,Steam Eq-Total Heat Gain[J]
Zone,Sum,Steam Eq-Radiant Heat Gain[J]
Zone,Sum,Steam Eq-Convective Heat Gain[J]
Zone,Sum,Steam Eq-Latent Heat Gain[J]
Zone,Sum,Steam Eq-Lost Heat Gain[J]
Zone,Sum,Steam Eq-Consumption[J]
```

Field: Electric Eq-Total Heat Gain[J]

Field: Gas Eq-Total Heat Gain[J]

Field: Other Eq-Total Heat Gain[J]

Field: Hot Water Eq-Total Heat Gain[J]

Field: Steam Eq-Total Heat Gain[J]

The total heat gain field is sum of the several other fields (radiant, latent, convective). This field is expressed in joules.

Field: Electric Eq-Radiant Heat Gain[J]

Field: Gas Eq-Radiant Heat Gain[J]

Field: Other Eq-Radiant Heat Gain[J]

Field: Hot Water Eq-Radiant Heat Gain[J]

Field: Steam Eq-Radiant Heat Gain[J]

This field is the amount of radiant heat gain from the specific equipment within the zone in Joules. This is determined by the current heat gain from the equipment to the zone and the "Fraction Radiant" specified in the input. The radiant gains (long wavelength) are distributed to the surfaces using an area weighting scheme.

Field: Electric Eq-Convective Heat Gain[J]

Field: Gas Eq-Convective Heat Gain[J]

Field: Other Eq-Convective Heat Gain[J]

Field: Hot Water Eq-Convective Heat Gain[J]

Field: Steam Eq-Convective Heat Gain[J]

This field is the amount of convective heat gain from the specific equipment within the zone in Joules. This is determined by the current heat gain from the equipment to the zone and the "Fraction Radiant", "Fraction Lost", "Fraction Latent" specified in input (1-FractionRadiant-FractionLost-FractionLatent = FractionConvected). The convective heat gain is added to the zone air heat balance directly.

Field: Electric Eq-Latent Heat Gain[J]

Field: Gas Eq-Latent Heat Gain[J]

Field: Other Eq-Latent Heat Gain[J]

Field: Hot Water Eq-Latent Heat Gain[J]

Field: Steam Eq-Latent Heat Gain[J]

This field is the amount of latent heat gain from the specific equipment within the zone in Joules. This is determined by the current heat gain from the equipment to the zone and the "Fraction Latent" specified in the input.

Field: Electric Eq-Lost Heat Gain[J]

Field: Gas Eq-Lost Heat Gain[J]

Field: Other Eq-Lost Heat Gain[J]

Field: Hot Water Eq-Lost Heat Gain[J]

Field: Steam Eq-Lost Heat Gain[J]

This field is the amount of "lost" heat gain from the specific equipment within the zone in Joules. This is determined by the current heat gain from the equipment to the zone and the "Fraction Lost" specified in the input. This amount does not affect the energy heat balance in the zone.

Field: Electric Eq-Consumption[J]

The electric equipment consumption field is sum of the other fields (radiant, latent, convective, lost). This field is expressed in joules. This amount is also shown in the Electricity meters that are associated with the zone – Electricity:Facility, Electricity:Buidling, Electricity:Zone:<Zone Name>, and ZoneSource:Electricity.

Field: Gas Eq-Consumption[J]

The gas equipment consumption field is sum of the other fields (radiant, latent, convective, lost). This field is expressed in joules. This amount is also shown in the Gas meters that are associated with the zone – Gas:Facility, Gas:Buidling, Gas:Zone:<Zone Name>, and ZoneSource:Gas. Gas, here, refers to "Natural Gas" fuel.

Field: Other Eq-Consumption[J]

Field: Hot Water Eq-Consumption[J]

Field: Steam Eq-Consumption[J]

The equipment consumption field is sum of the other fields (radiant, latent, convective, lost). This field is expressed in joules. These amounts do not (currently) translate into meter outputs.

Baseboard Heat (Outside Temperature Controlled)

This object specifies outside temperature-controlled (OTC) baseboard heating. The capacities (high and low) are specified in W at the temperatures specified. The schedule

allows both capacities to change hourly on a proportional basis. This baseboard heater does not operate if the outdoor dry bulb is above the high temperature limit. Between the high temperature and the low temperature, the capacity is interpolated (linear) between the high and the low capacity values. Below the low temperature, the capacity is set at the low capacity value. This allows the user to add baseboard heat to a perimeter zone starting at a prescribed temperature and then slowly increases this capacity to a max value.

Example:

Temperature High = 10 C Capacity High = 100,000 W

Temperature Low = 0 C Capacity Low = 500,000 W

Table 5. Outdoor Temperature Controlled Baseboard Heat Temperature vs. Capacity

Outdoor Dry Bulb(C)	Baseboard Output
>10	0
10	100,000
8	180,000
6	260,000
4	340,000
2	420,000
0	500,000
< 0	500,000

Field: Zone Name

This field is the name of the zone (ref: Zone) and attaches the baseboard heat equipment statement to a thermal zone in the building.

Field: Schedule Name

This field is the name of the schedule (ref: Schedule) that modifies the capacities (high and low) for baseboard heat equipment (see next field). The schedule values can be any positive number. The actual energy input for the baseboard equipment in a zone as defined by this statement depends on the actual outdoor temperature and where that temperature is in the range of Low Temperature to High Temperature..

Field: Low Temperature

If the outdoor dry bulb temperature (degrees Celsius) is at or below the low temperature the baseboard heater operates at the low temperature capacity.

Field: Capacity at Low Temperature

This is the baseboard equipment capacity (Watts) at the low temperature limit.

Field: High Temperature

If the outdoor dry bulb temperature (degrees Celsius) is greater than the high temperature the baseboard heater will not operate.

Field: Capacity at High Temperature

This is the baseboard equipment capacity (Watts) at the high temperature limit.

Field: Fraction Radiant

This field is a decimal number between 0.0 and 1.0 and is used to characterize the type of heat being given off by baseboard heat equipment in a zone. The number specified in this field will be multiplied by the difference between the total energy consumed by baseboard heat equipment to give the amount of long wavelength radiation gain from gas equipment in a zone.

```
BASEBOARD HEAT,
  A1 , \field Zone Name
       \required-field
       \type object-list
       \object-list ZoneNames
  A2 , \field SCHEDULE Name
       \required-field
       \type object-list
       \object-list ScheduleNames
  N1 , \field Capacity at low temperature
       \required-field
       \type real
       \units W
       \minimum> 0
  N2 , \field Low Temperature
       \required-field
       \units C
       \type real
  N3 , \field Capacity at high temperature
       \required-field
       \type real
       \units W
       \minimum 0
  N4 , \field High Temperature
       \required-field
       \units C
       \type real
  N5 ; \field Fraction Radiant
       \required-field
       \type real
       \minimum 0.0
       \maximum 1.0
       \default 0
```

An IDF example:

```
BASEBOARD HEAT, ZONE 1, BB Heat Sch,  !- Int Gain Type, Zone, and Schedule
   5857.501     ,  !- Capacity at Low Temp {w}
  -17.77778     ,  !- Low Temp {C}
  0.0000000E+00 ,  !- Capacity at High Temp {w}
   12.77778     ,  !- High Temp {C}
  0.7000000     ;  !- Fraction Radiant
```

Baseboard Heat Output

The following outputs are available for Baseboard Heat specifications:

```
Zone,Sum,BaseBoard-Total Heat Gain[J]
Zone,Sum,BaseBoard-Radiant Heat Gain[J]
Zone,Sum,BaseBoard-Convective Heat Gain[J]
Zone,Sum,BaseBoard-Electric Consumption[J]
```

Field: BaseBoard-Total Heat Gain[J]

This field is the total amount of heat gain from OTC baseboard heat within the zone in Joules. This is determined by the sum of the radiant and convective heat gains from the baseboard heat.

Field: BaseBoard-Radiant Heat Gain[J]

This field is the amount of radiant heat gain from OTC baseboard heat within the zone in Joules. This is determined by the current heat gain from the heater to the zone and the "Fraction Radiant" specified in the input. The radiant gains (long wavelength) are distributed to the surfaces using an area weighting scheme.

Field: BaseBoard-Convective Heat Gain[J]

This field is the amount of convective heat gain from the OTC baseboard heat within the zone in Joules. This is determined by the current heat gain from the heater to the zone and the "Fraction Radiant" specified in input (1-FractionRadiant = FractionConvected). The convective heat gain is added to the zone air heat balance directly.

Field: BaseBoard-Electric Consumption[J]

The outdoor temperature controlled baseboard heat option is assumed to be fueled by electricity. This field is the same as the BaseBoard-Total Heat Gain (above) in joules. However, this amount is also shown in the Electricity meters that are associated with the zone – Electricity:Facility, Electricity:Buidling, Electricity:Zone:<Zone Name>, and ZoneSource:Electricity.

Meters for Equipment Outputs

As described in each of the equipment sections, values for specific equipments will show up on the following meters:

Table 6. Distribution of Equipment to Meters

Meter Name	Scope	Equipment Specfics
Electricity:Facility	Entire Facility	Electric Equipment, OTC Baseboard Heat
Electricity:Building	All Zones	Electric Equipment, OTC Baseboard Heat
Electricity:Zone:<Zone Name>	Specific Zone	Electric Equipment, OTC Baseboard Heat
ZoneSource:Electricity	AllZones	Electric Equipment, OTC Baseboard Heat
Gas:Facility	Entire Facility	Gas Equipment
Gas:Building	All Zones	Gas Equipment
Gas:Zone:<Zone Name>	Specific Zone	Gas Equipment
ZoneSource:Gas	AllZones	Gas Equipment

Daylighting

Daylighting is invoked in EnergyPlus by the use of two objects: Daylighting:Detailed and Daylighting:Simple. These are described in the following two object descriptions.

Note that Daylighting:Detailed and Daylighting:Simple objects may be intermixed in a single IDF but may not be used in the same zone.

Daylighting:Detailed

In this method daylighting illuminance levels are calculated and then used to determine how much the electric lighting can be reduced. The daylight illuminance level in a zone depends on many factors, including sky condition; sun position; calculation point; location, size, and glass transmittance of windows; window shades; and reflectance of interior surfaces. Reduction of electric lighting depends on daylight illuminance level, illuminance set point, fraction of zone controlled and type of lighting control.

Field: Zone name

The name of the zone to which the following daylighting-related input applies.

The following three fields apply only if Total Daylighting Reference Points = 0:

Field: Total Daylighting Reference Points

Allowed values are 1 or 2. This the number of reference points in the zone at which daylighting illuminance will be calculated based on input for the following fields.

Fields: (X,Y,Z) of First Reference Point

The x, y and z coordinates, in the zone coordinate system, of the first daylighting reference point. Required if Total Daylighting Reference Points = 1 or 2. If you want to divide a thermal zone into two independently-controlled lighting zones, then Total Daylighting Reference Points should be set to 2 and (X,Y,Z) of Second Reference Point should also be specified. It is assumed that the photocells that control the overhead electric lighting respond to the light levels at the specified reference points.

Fields: (X,Y,Z) of Second Reference Point

The x, y and z coordinates, in the zone coordinate system, of the second daylighting reference point. Required if Total Daylighting Reference Points = 2.

Field: Fraction of Zone Controlled by First Reference Point

The fraction of the zone's floor-area whose electric lighting is controlled by the daylight illuminance at the first reference point. If there is only one reference point then a fraction 1.0 – (Fraction of Zone Controlled by First Reference Point) is assumed to have no lighting control.

Field: Fraction of Zone Controlled by Second Reference Point

The fraction of the zone's floor-area whose electric lighting is controlled by the daylight illuminance at the second reference point. Required if Total Daylighting Reference Points = 2. A fraction, 1.0 – (Fraction of Zone Controlled by First Reference Point + Fraction of Zone Controlled by Second Reference Point), is assumed to have no lighting control.

Field: Illuminance SetPoint at First Reference Point

The desired lighting level (in lux) at the first reference point. This is the lighting level that would be produced at this reference point at night if the overhead electric lighting were operating at full input power.

Field: Illuminance SetPoint at Second Reference Point

The desired lighting level (in lux) at the second reference point. Required if Total Daylighting Reference Points = 2. This is the lighting level that would be produced at this reference point at night if the overhead electric lighting were operating at full input power.

Field: Lighting Control Type

The type of overhead electric lighting control. All reference points specified are assumed to have this type of control.

For Lighting Control Type = 1 (continuous), the overhead lights dim continuously and linearly from (maximum electric power, maximum light output) to (minimum electric power, minimum light output) as the daylight illuminance increases. The lights stay on at the minimum point with further increase in the daylight illuminance.

For Lighting Control Type = 2 (stepped), the electric power input and light output vary in discrete, equally spaced steps. The number of steps is given by Number of Steps (Excluding Off) of Stepped Control. For example, if Number of Steps = 3 and Illuminance Setpoint = 600, then the following table shows the fraction of the lights that are on vs. daylight illuminance.

Table 7. Stepped Lighting Control Example

Example of a Stepped Lighting Control System with Three Steps	
Daylight illuminance	**Fraction of lights that are on**
0-200	1.0
200-400	2/3
400-600	1/3
600 and above	0.0

Lighting Control Type = 3 (continuous/off) is the same as Lighting Control Type = 1 except that the lights switch off completely when the minimum dimming point is reached.

Field: Azimuth Angle of View Direction Relative to Window for Glare Calculation

Daylight glare from a window depends on occupant view direction. It is highest when you look directly at a window and decreases as you look away from a window. This field specifies the view direction for calculating glare. It is the angle, measured clockwise in the horizontal plane, between the zone y-axis and the occupant view direction.

Field: Maximum Allowable Discomfort Glare Index

If a daylit zone has windows with shading devices, the shades will be deployed if the daylight glare at the first reference point exceeds the value of this field. To get this type of glare control you have to specify Trigger = Glare, GlareOrSolarOnWindow, GlareOrHorizontalSolar, GlareOrOutsideAirTemp, GlareOrZoneAirTemp or GlareOrZoneLoad in WindowShadingControl for one or more windows in the zone (see WindowShadingControl).

If a zone has two or more windows with glare control, the shading devices will be deployed one by one in the order in which the windows are input until the glare level at each reference point falls below Maximum Allowable Discomfort Glare Index or is as close as possible to it.

The following table gives recommended values of Maximum Allowable Discomfort Glare Index.

Table 8. Recommended Values -- Discomfort Glare Index

Recommended Values of Maximum Allowable Discomfort Glare Index	
Activity or zone type	**Maximum Allowable Discomfort Glare Index**
Art Galleries	16
Factories	
Rough work	28
Engine assembly	26
Fine assembly	24
Instrument assembly	22
Hospital wards	18
Laboratories	22
Museums	20
Offices	22
School classrooms	20

Field: Minimum Input Power Fraction for Continuous Dimming Control

For Lighting Control Type = 1 (continuous), the lowest power the lighting system can dim down to, expressed as a fraction of maximum input power (see figure, below). For Lighting Control Type = 3 (continuous/off) this is the power fraction reached just before the lights switch off completely.

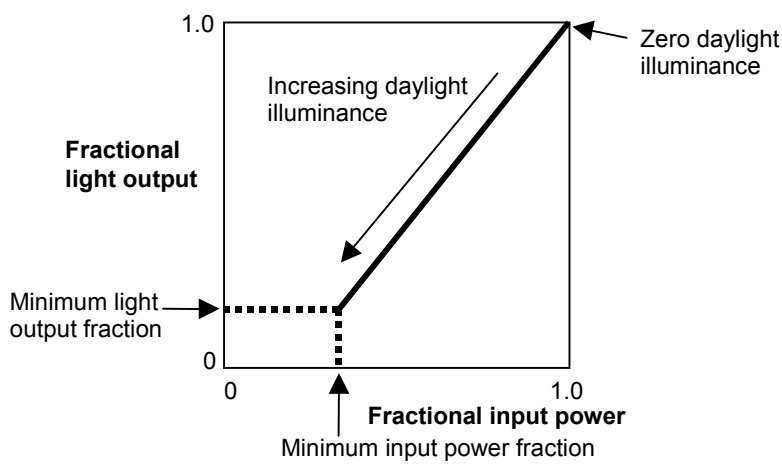

Figure 23. Illustration of continuous dimming relationship

The figure above shows the relationship between electric light output and electrical input.

Field: Minimum Light Output Fraction for Continuous Dimming Control

For Lighting Control Type = 1 (continuous), the lowest lighting output the lighting system can dim down to, expressed as a fraction of maximum light output (see figure, above). This is the fractional light output that the system produces at minimum input power. For Lighting Control Type = 3 (continuous/off) this is the power fraction reached just before the lights switch off completely.

Field: Number of Steps (Excluding Off) of Stepped Control

The number of steps, excluding off, in a stepped lighting control system (see figure, below). Required if Lighting Control Type = 2. The steps are assumed to be equally spaced.

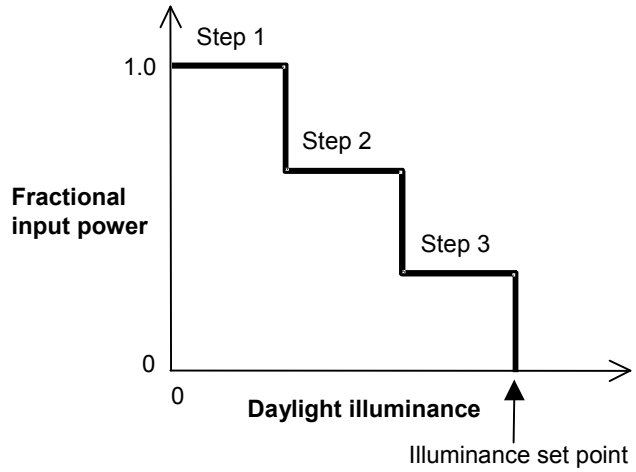

Figure 24. Stepped lighting control with Number of Steps = 3.

Field: Probability Lighting Will Be Reset When Needed in Manual Stepped Control

May be specified if a stepped lighting control system (Lighting Control Type = 2) is manually operated, such as in a simple, one-step (on-off) system. Gives the probability the occupants of a daylit zone will set the electric lights to the correct level to obtain the required illuminance. The rest of the time the lights are assumed to be set one step too high. For example, consider an on-off lighting system (Number of Steps = 1) with a set point of 600 lux and 0.7 reset probability. Then, when daylighting exceeds 600 lux, the electric lights will be off 70% of the time and on 30% of the time.

```
DAYLIGHTING:DETAILED,
       \min-fields 19
       \note Dimming of overhead electric lighting is determined from
       \note interior daylight illuminance calculated at one or two reference points.
       \note Glare from daylighting is also calculated.
  A1 , \field Zone Name
       \required-field
       \type object-list
       \object-list ZoneNames
  N1 , \field Total Daylighting Reference Points
       \type integer
       \minimum 1
       \maximum 2
       \default 1
  N2 , \field X-coordinate of first reference point
       \units m
       \type real
  N3 , \field Y-coordinate of first reference point
       \units m
       \required
       \type real
  N4 , \field Z-coordinate of first reference point
       \units m
       \default 0.8
       \type real
  N5 , \field X-coordinate of second reference point
       \units m
       \type real
       \note Required if Total Daylighting Reference Points = 2
  N6 , \field Y-coordinate of second reference point
       \units m
       \type real
       \note Required if Total Daylighting Reference Points = 2
  N7 , \field Z-coordinate of second reference point
       \units m
       \type real
       \minimum 0.0
       \default 0.8
  N8 , \field Fraction of zone controlled by first reference point
       \type real
       \minimum 0.0
       \maximum 1.0
       \default 1.0
  N9 , \field Fraction of zone controlled by second reference point
       \type real
       \minimum 0.0
       \maximum 1.0
       \default 0.0
  N10, \field Illuminance setpoint at first reference point
       \units lux
       \type real
       \minimum 0.0
       \default 500
  N11, \field Illuminance setpoint at second reference point
       \units lux
       \type real
       \minimum 0.0
       \default 500
  N12, \field Lighting control type
       \type integer
       \minimum 1
       \maximum 3
       \note 1=continuous,2=stepped,3=continuous/off
       \default 1
  N13, \field Azimuth angle of view direction clockwise from zone y-axis (for glare calculation)
       \required
       \units deg
       \minimum 0
       \maximum 360
  N14, \field Maximum allowable discomfort glare index
       \type real
```

```
       \minimum 1
       \note The default is for general office work
       \default 22
  N15, \field Minimum input power fraction for continuous dimming control
       \type real
       \minimum 0.0
       \maximum 0.6
       \default 0.3
  N16, \field Minimum light output fraction for continuous dimming control
       \type real
       \minimum 0.0
       \maximum 0.6
       \default 0.2
  N17, \field Number of steps (excluding off) for stepped control
       \type real
       \default 1
  N18; \field Probability lighting will be reset when needed in manual stepped control
       \type real
       \minimum 0.0
       \maximum 1.0
       \default 1.0
```

An IDF example:

```
DAYLIGHTING:DETAILED,RESISTIVE ZONE, ! Zone Name
    1,                ! Total Daylighting Reference Points
    3.048,3.048,0.9,  ! X,Y,Z coordinates of first reference point {m}
    0.0,0.0,0.0,      ! X,Y,Z coordinates of second reference point, if present {m}
    0.99,             ! Fraction of zone controlled by first reference point
    0.0,              ! Fraction of zone controlled by second reference point, if present
    500.,             ! Illuminance setpoint at first reference point {lux}
    500.,             ! Illuminance setpoint at second reference point, if present {lux}
    1,                ! Lighting control type {1=continuous,2=stepped,3=continuous/off}
    180.0,            ! Azimuth angle of view direction for glare calculation {deg},
                      !   measured clockwise from zone y-axis. Value of 180 gives view
                      !   (from reference point) that is directly at window, maximizing glare.
    20.0,             ! Maximum discomfort glare index for window shade control
    0.3,              ! Minimum input power fraction for continuous dimming control
    0.2,              ! Minimum light output fraction for continuous dimming control
    0,                ! Number of steps, excluding off, for stepped control
    1.0;              ! Probability electric lighting will be reset when needed (used only
                      !   for stepped control, to simulate manual on/off control)
```

Guidelines for Daylighting Modeling (Detailed Method)

Following are some guidelines for preparing EnergyPlus input to model the effects of daylighting. Before studying these guidelines, however, you should read the description of each input field under Daylighting:Detailed, and review the IDF example, above, and the sample daylighting input, PurchAirWithDaylighting.idf.

Use of Window Multipliers

If an exterior wall in a daylit zone has a number of identical windows, the windows should be entered separately rather than using a window multiplier (ref: Surface:HeatTransfer:Sub). Using a multiplier would give an incorrect illuminance calculation since individual windows would not be positioned correctly on the wall.

Use of Zone Multipliers

A zone multiplier should not be used on a daylit zone if the windows in the zone are shadowed by exterior obstructions like trees or neighboring buildings, or by obstructions caused by other parts of building. The reason for this is that the shadowing on the windows of the multiplied zone may be different from zone to zone depending on exactly how the shadows fall on the zones. However, a zone multiplier may be used on a daylit zone if the shadowing is by overhangs, fins and/or window setback.

Thermal Zoning for Daylighting

To correctly calculate both direct and inter-reflected daylight illuminance you should try to model a thermal zone consisting of several similar rooms separated by interior walls as a representative room with a zone multiplier (ref: Zone). An example of this is shown in Figure 25. Room-1 is the representative room, with a zone multiplier = 4.

Interior walls IW-1, IW-2 and IW-3 should be treated as adiabatic, i.e., they should have Outside Face Environment = OtherZoneSurface and Outside Face Environment Object = IW-1, IW-2, or IW-3, respectively (ref: Surface:HeatTransfer). Similarly, if the ceiling and floor of Room-1 are interior surfaces, they should be treated as adiabatic.

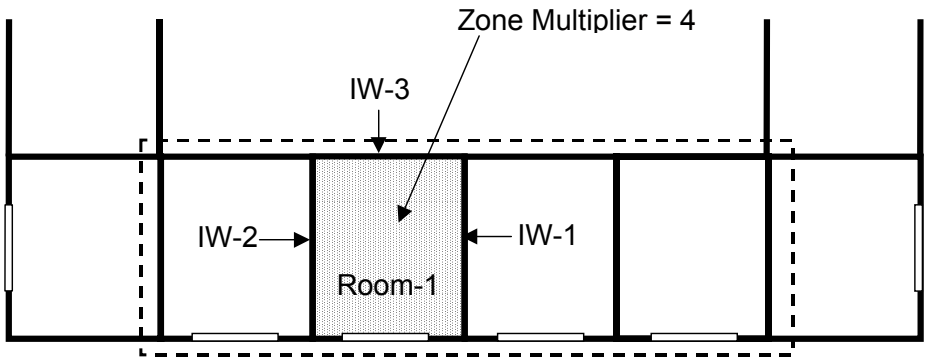

Figure 25. For daylighting purposes the thermal zone enclosed by the dashed boundary line should be modeled as a typical zone (Room-1) with a zone multiplier of 4.

Sometimes a representative room cannot be found. Figure 26 shows a section of a building with four rooms having different daylighting characteristics because of different floor area, orientation and/or window size. In this case lumping the rooms into a single thermal zone would give nonsensical daylighting illuminance values because of the presence of the interior walls, which EnergyPlus ignores when calculating illuminance reaching a reference point directly from a window (i.e., without reflection). The solution in this case is to describe each room as a separate thermal zone with its own daylighting reference points, and input the interior walls because these will participate in the calculation of inter-reflected illuminance.

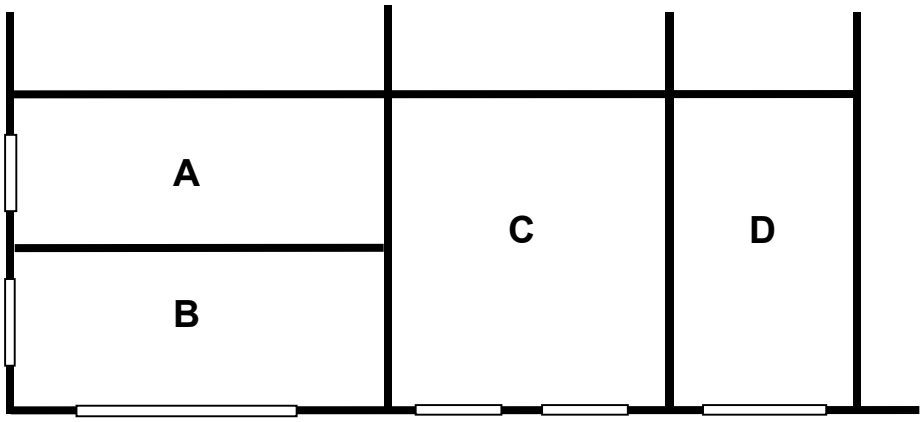

Figure 26. Rooms A, B, C and D have different daylighting characteristics. If lumped into a single thermal zone the daylighting calculation will be inaccurate because the blockage of direct light by the interior walls between these rooms will not be taken into account. To get a good daylighting calculation each room should be input as a separate thermal zone.

Multiple Lighting Zones

The detailed daylighting calculation allows a thermal zone to be divided into two independently-controlled lighting zones. (See the fields: Fraction of Zone Controlled by First Reference Point, Fraction of Zone Controlled by Second Reference Point, Illuminance SetPoint at First Reference Point, and Illuminance SetPoint at Second Reference Point.) An example is shown in ***Figure 27***, where a relatively deep thermal zone has two lighting zones of equal area.

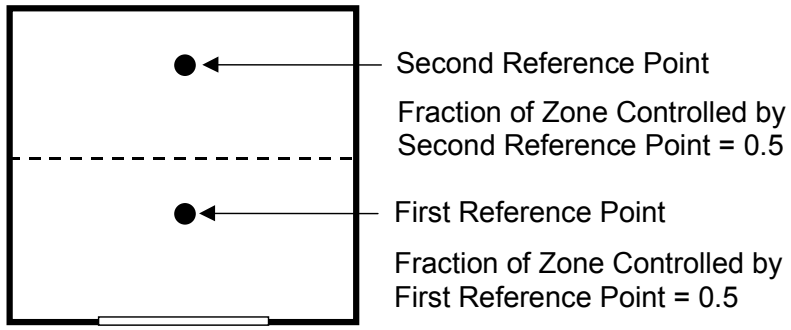

Figure 27. Two independently-controlled lighting zones, each with 50% of the area of the thermal zone.

It is also possible to daylight only part of a thermal zone. Figure 28 shows an example of a thermal zone with four rooms. Room A, with 40% of the zone's floor area, is daylit, whereas rooms B, C and D, which have interior windows but no exterior windows, are not daylit.[1] Note that a reference point and zone fraction are specified only for the daylit room.

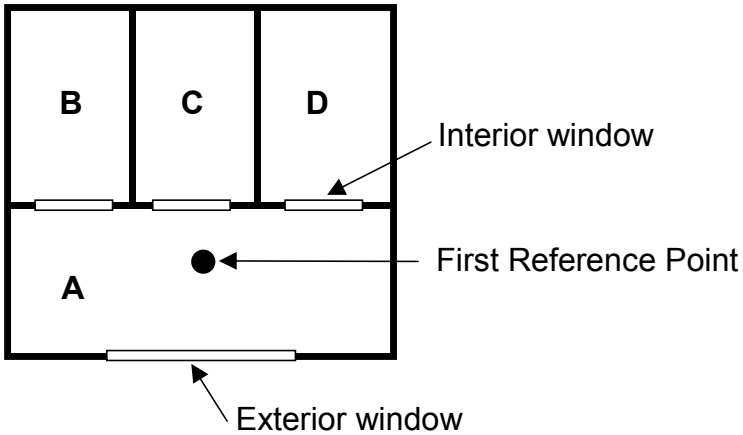

Figure 28. A thermal zone with four rooms. Only room A, with 40% of the floor area, is daylit. EnergyPlus does not model daylighting through the interior windows between A and the back rooms, B, C and D.

Fins, Overhangs and Other Shadowing Surfaces

The detailed daylighting calculation accounts for the presence of fins, overhangs, setback surfaces and other shadowing surfaces in determining the amount of light that strikes the windows. For daylighting, these surfaces are considered to be opaque and black.

[1] In principle, rooms B, C and D could be daylit through the *interior* windows between these rooms and room A. However, EnergyPlus does not currently calculate daylighting through interior windows.

"Opaque" means that these surfaces completely block light that would otherwise reach a window. For example, an awning, which normally would transmit some light, is considered opaque in the daylighting calculation.

"Black" means that these surfaces do not reflect light. For example, the reflection from the top of an overhang onto the window above is not calculated.

Future versions of EnergyPlus will consider transmission and reflection by shadowing surfaces.

Daylighting:Simple

In the "simple" method of daylighting calculation an "effectiveness" method is used in which input for Schedule, Fraction Beam Usable and Fraction Diffuse Usable determine how much electric lighting can be reduced based on the amount of solar radiation entering the zone. Use of this method also requires that you specify a value for Fraction Replaceable in the Lights input for the zone (ref: Lights).

Field: Zone name

The name of the zone to which the following daylighting-related input applies.

Field: Schedule Name

The name of a schedule that acts as a multiplier on Fraction Beam Usable to account for hourly variations as sunlight patterns created by internal zone obstructions move across the room. The electric lighting power will be reduced by the amount of usable beam solar radiation plus the amount of usable diffuse solar radiation entering the zone up to the amount "replaceable" (see Fraction Replaceable under "Lights").

Field: Fraction Beam Usable

The fraction of beam solar radiation entering the zone that can reduce electric lighting.

Field: Fraction Diffuse Usable

The fraction of diffuse solar radiation (from the sky and reflected from the ground) entering the zone that can reduce electric lighting.

```
DAYLIGHTING:SIMPLE,
       \min-fields 4
       \note Uses usable fractions of beam and diffuse solar radiation in zone
       \note to determine how much overhead electric lighting can be dimmed.
  A1 , \field Zone Name
       \required-field
       \type object-list
       \object-list ZoneNames
  A2 , \field SCHEDULE Name
       \note Time-step schedule value multiplies Fraction Beam Usable
       \note (It does not multiply Fraction Diffuse Usable)
       \required-field
       \type object-list
       \object-list ScheduleNames
  N1 , \field Fraction Beam Usable
       \note Fraction of beam solar entering zone that is usable for daylighting
       \type real
       \minimum 0.0
       \maximum 1.0
       \default 0.0
  N2 ; \field Fraction Diffuse Usable
       \type real
       \minimum 0.0
       \maximum 1.0
       \default 0.0
```

An IDF example:

```
DAYLIGHTING:SIMPLE, PSI FOYER,
  BLDG Sch   4,   ! Schedule that multiplies Fraction Beam Usable
  0.3500000    ,  ! Fraction Beam Usable
  0.6000000    ;  ! Fraction Diffuse Usable
```

Daylighting Output

The following daylighting-specific outputs are available for Daylighting:Detailed:

```
Zone,Average,Daylight Illum at Ref Point 1 [lux]
Zone,Average,Glare Index at Ref Point 1 []
Zone,Average,Daylight Illum at Ref Point 2 [lux], if applicable
Zone,Average,Glare Index at Ref Point 2 [], if applicable
Zone,Average,Ltg Power Multiplier from Daylighting []
```

And, of course, any change in Electric/Lights consumption!

Daylight Illum at Ref Point 1 [lux]

The daylight illuminance at the first reference point in a daylit zone.

Daylight Illum at Ref Point 2 [lux]

The daylight illuminance at the second reference point in a daylit zone.

Glare Index at Ref Point 1 []

The daylight glare index at the first reference point in a daylit zone.

Glare Index at Ref Point 2 []

The daylight glare index at the second reference point in a daylit zone.

Ltg Power Multiplier from Daylighting []

The amount by which the overhead electric lighting power in a zone is multiplied due to usage of daylighting to dim or switch electric lights. For example, if the multiplier is M and the electric power without dimming is P, then the electric power with dimming is M*P. The

multiplier varies from 0.0, which corresponds to maximum dimming (zero electric lighting), to 1.0, which corresponds to no dimming.

Group – ExteriorEnergyUse Equipment

To facilitate the reporting of exterior consumption (to the building's heat balance/loads considerations), several objects have been included. The consumption related to these items will appear on meters specific to the items.

ExteriorLights

Field: DescriptiveName

This descriptive name allows the values of exterior lights consumption to appear in the "normal" output variable list as well as the meters. It cannot be blank nor can it be duplicated by other ExteriorLights statements.

Field: SCHEDULE Name

A schedule will allow the exterior lights consumption to be operationally different, hour to hour as well as seasonally. Fractional values in the basic schedule will be applied to the design level field below.

Field: Design Level

This field (in Watts) is typically used to represent the maximum electrical input to exterior lighting fixtures that is then multiplied by a schedule fraction (see previous field). In EnergyPlus, this is slightly more flexible in that the lighting design level could be a "diversity factor" applied to a schedule of real numbers. Note that while the schedule value can vary from hour to hour and seasonally, the design level field is constant for all simulation environments.

```
ExteriorLights,            ! only used for Meter type reporting, does not affect building loads
  A1 , \field DescriptiveName
  A2 , \field SCHEDULE Name
       \type object-list
       \object-list ScheduleNames
  N1 ; \field Design Level
       \units W
       \type real
       \minimum 0
```

An IDF Example:

```
ExteriorLights,OutsideLights,ON,1000;
```

ExteriorLights Output

Output for exterior lights appears in three possible places. It will appear on two meters (Electricity:Facility and ExteriorLights:Electricity) as well as in its own designated value in the standard output file.

```
Zone,Meter,Electricity:Facility [J]
Zone,Meter,ExteriorLights:Electricity [J]
Zone,Sum,Exterior Lights-Electric Consumption [J]
```

ExteriorFuelEquipment

Field: DescriptiveName

This descriptive name allows the values of exterior equipment consumption to appear in the "normal" output variable list as well as the meters. It cannot be blank nor can it be duplicated by other ExteriorFuelEquipment or ExteriorWaterEquipment statements.

Field: FuelUseType

This field designates the appropriate meter for the exterior fuel equipment. Valid fuel types are: Electricity, NaturalGas, PropaneGas, FuelOil#1, FuelOil#2, Diesel, Gasoline, Coal, Steam, PurchasedHeating, and PurchasedCooling. The fuel type triggers the application of consumption amounts to the appropriate energy meters.

Field: SCHEDULE Name

A schedule will allow the exterior lights consumption to be operationally different, hour to hour as well as seasonally. Fractional values in the basic schedule will be applied to the design level field below.

Field: Design Level

This field (usually Watts, if FuelUseType=Water, then m3/s) is typically used to represent the maximum input to exterior fixtures that is then multiplied by a schedule fraction (see previous field). In EnergyPlus, this is slightly more flexible in that the design level could be a "diversity factor" applied to a schedule of real numbers. Note that while the schedule value can vary from hour to hour and seasonally, the design level field is constant for all simulation environments.

```
ExteriorFuelEquipment,
  A1 , \field DescriptiveName
       \required-field
  A2 , \field FuelUseType
       \required-field
       \type choice
       \key Electricity
       \key NaturalGas
       \key PropaneGas
       \key FuelOil#1
       \key FuelOil#2
       \key Diesel
       \key Gasoline
       \key Coal
       \key Steam
       \key PurchasedHeating
       \key PurchasedCooling
  A3 , \field SCHEDULE Name
       \required-field
       \type object-list
       \object-list ScheduleNames
  N1 ; \field Design Level
       \required-field
       \note if key=Water, units are m3/s
       \units W
       \type real
       \minimum 0
```

IDF Examples:

```
ExteriorFuelEquipment,OutsideGasEq,Gas,ON,1000;
ExteriorFuelEquipment,OutsideCoalEq,Coal,ON,1000;
ExteriorFuelEquipment,OutsideFuelOil1Eq,FuelOil#1,ON,1000;
```

```
ExteriorFuelEquipment,OutsideFuelOil2Eq,FuelOil#2,ON,1000;
ExteriorFuelEquipment,OutsideLPGEq,PropaneGas,ON,1000;
```

ExteriorWaterEquipment

Field: DescriptiveName

This descriptive name allows the values of exterior equipment consumption to appear in the "normal" output variable list as well as the meters. It cannot be blank nor can it be duplicated by other ExteriorFuelEquipment or ExteriorWaterEquipment statements.

Field: FuelUseType

For ExteriorWaterEquipment, only "Water" is current allowed for this field.

Field: SCHEDULE Name

A schedule will allow the exterior water consumption to be operationally different, hour to hour as well as seasonally. Fractional values in the basic schedule will be applied to the design level field below.

Field: Design Level

This field (in m3/s) is typically used to represent the maximum volumetric flow for water fixtures that is then multiplied by a schedule fraction (see previous field). In EnergyPlus, this is slightly more flexible in that the exterior water equipment design level could be a "diversity factor" applied to a schedule of real numbers. Note that while the schedule value can vary from hour to hour and seasonally, the design level field is constant for all simulation environments.

```
ExteriorWaterEquipment,
  A1 , \field DescriptiveName
  A2 , \field FuelUseType
       \type choice
       \key Water
  A3 , \field SCHEDULE Name
       \type object-list
       \object-list ScheduleNames
  N1 ; \field Design Level
       \units m3/s
       \type real
       \minimum 0
```

IDF Example:

```
ExteriorWaterEquipment,OutsideWaterEq,Water,ON,10000;
```

ExteriorFuelEquipment, ExteriorWaterEquipment Outputs

Output for exterior equipment consumption appears in three possible places. It will appear on two meters (<FuelType>:Facility and ExteriorEquipment:<FuelType>) as well as in its own designated value in the standard output file, ExteriorEq Misc-<FuelType> Consumption. All outputs are in [J] except water consumption which is in [m3]

```
Zone,Meter,Electricity:Facility [J]
Zone,Meter,ExteriorEquipment:Electricity [J]
Zone,Sum,ExteriorEq Misc-Electric Consumption [J]

Zone,Meter,Gas:Facility [J]
Zone,Meter,ExteriorEquipment:Gas [J]
Zone,Sum,ExteriorEq Misc-Gas Consumption [J]

Zone,Meter,Water:Facility [m3]
Zone,Meter,ExteriorEquipment:Water [m3]
```

```
Zone,Sum,ExteriorEq Misc-Water Consumption [m3]

Zone,Meter,Coal:Facility [J]
Zone,Meter,ExteriorEquipment:Coal [J]
Zone,Sum,ExteriorEq Misc-Coal Consumption [J]

Zone,Meter,FuelOil#1:Facility [J]
Zone,Meter,ExteriorEquipment:FuelOil#1 [J]
Zone,Sum,ExteriorEq Misc-FuelOil#1 Consumption [J]

Zone,Meter,Propane:Facility [J]
Zone,Meter,ExteriorEquipment:Propane [J]
Zone,Sum,ExteriorEq Misc-Propane Consumption [J]
```

```
Zone,Meter,FuelOil#2:Facility [J]
Zone,Meter,ExteriorEquipment:FuelOil#2 [J]
Zone,Sum,ExteriorEq Misc-FuelOil#2 Consumption [J]

Zone,Meter,Gasoline:Facility [J]
Zone,Meter,ExteriorEquipment:Gasoline [J]
Zone,Sum,ExteriorEq Misc-Gasoline Consumption [J]

Zone,Meter,Diesel:Facility [J]
Zone,Meter,ExteriorEquipment:Diesel [J]
Zone,Sum,ExteriorEq Misc-Diesel Consumption [J]

Zone,Meter,Steam:Facility [J]
Zone,Meter,ExteriorEquipment:Steam [J]
Zone,Sum,ExteriorEq Misc-Steam Consumption [J]

Zone,Meter,PurchasedHeating:Facility [J]
Zone,Meter,ExteriorEquipment:PurchasedHeating [J]
Zone,Sum,ExteriorEq Misc-PurchasedHeating Consumption [J]

Zone,Meter,PurchasedCooling:Facility [J]
Zone,Meter,ExteriorEquipment:PurchasedCooling [J]
Zone,Sum,ExteriorEq Misc-PurchasedCooling Consumption [J]
```

Group – AirFlow

An important characteristic of energy consumption in buildings is the airflow between zones and due to natural ventilation (e.g. open windows). This group of objects describes those elements.

Infiltration

Infiltration is the unintended flow of air from the outdoor environment directly into a thermal zone. Infiltration is generally caused by the opening and closing of exterior doors, cracks around windows, and even in very small amounts through building elements. The basic equation used to calculate infiltration in EnergyPlus is:

$$Infiltration = \left(I_{design}\right)\left(F_{schedule}\right)\left[A + B\left|\left(T_{zone} - T_{odb}\right)\right| + C\left(WindSpeed\right) + D\left(Windspeed^2\right)\right]$$

More advanced infiltration calculations are possible using the EnergyPlus link to the COMIS program. Infiltration described by the equation shown above is entered into EnergyPlus

using the following syntax. Exfiltration (the leakage of zone air to the outside) is generally handled better as zone exhaust air in the zone equipment description.

Field: Zone Name

This field is the name of the zone (ref: Zone) and attaches a particular infiltration statement to a thermal zone in the building.

Field: Schedule Name

This field is the name of the schedule (ref: Schedule) that modifies the maximum design volume flow rate parameter (see next field). This fraction between 0.0 and 1.0 is noted as $F_{schedule}$ in the above equation.

Field: Design Volume Flow Rate

This number (noted as I_{design} in the above equation)is the maximum amount of infiltration expected at design conditions. The flow rate is expressed in units of m^3/s. The design value is modified by the schedule fraction (see previous field) and user specified coefficients (see next four fields).

Field: Constant Term Coefficient

This number is the "A" parameter in the above infiltration equation. It is part of the user specified modifying parameters that are a function of environmental factors. This parameter, however, is a constant under all conditions and is not modified by any environmental effect. As a result, it is dimensionless.

Field: Temperature Term Coefficient

This number is the "B" parameter in the above infiltration equation. It is part of the user specified modifying parameters that are a function of environmental factors. This parameter is modified by the temperature difference between the outside and inside air dry bulb temperatures. The units for this parameter are inverse Celsius.

Field: Velocity Term Coefficient

This number is the "C" parameter in the above infiltration equation. It is part of the user specified modifying parameters that are a function of environmental factors. This parameter is modified by the speed of wind being experienced outside the building. The units for this parameter are s/m.

Field: Velocity Squared Term Coefficient

This number is the "D" parameter in the above infiltration equation. It is part of the user specified modifying parameters that are a function of environmental factors. This parameter is modified by square of the speed of wind being experienced outside the building. The units for this parameter are s^2/m^2.

```
INFILTRATION,
       \memo  Infiltration is specified as a design level which is modified by a schedule fraction,
       \memo temperature difference and wind speed:
       \memo  Infiltration=Idesign * Fschedule * (A + B*(Tzone-Todb) + C*WindSpd + D * WindSpd**2)
  A1 , \field Zone Name
       \type object-list
       \object-list ZoneNames
  A2 , \field SCHEDULE Name
       \type object-list
       \object-list ScheduleNames
  N1 , \field Design Volume Flow Rate
       \units m3/Sec
       \note  "Idesign" in Equation
       \type real
  N2 , \field Constant Term Coefficient
       \note  "A" in Equation
       \type real
  N3 , \field Temperature Term Coefficient
       \note  "B" in Equation
       \type real
  N4 , \field Velocity Term Coefficient
       \note  "C" in Equation
       \type real
  N5 ; \field Velocity Squared Term Coefficient
       \note  "D" in Equation
       \type real
```

An IDF example:

```
INFILTRATION, DORM ROOMS AND COMMON AREAS, BLDG Sch   3,  ! Int Gain Type, Zone, and Schedule
   2.831685    ,  ! Design Level {m3/Sec}
  0.6060000    ,  ! Constant Term Coef
  3.6359996E-02,  ! Temp Term Coef
  0.1177165    ,  ! Velocity Term Coef
  0.0000000E+00;  ! Velocity**2 Term Coef
```

Infiltration Output

Current infiltration output values:

```
Zone,Sum,Infiltration-Heat Loss[J]
Zone,Sum,Infiltration-Heat Gain[J]
Zone,Sum,Infiltration-Volume[m3]
Zone,Sum,Infiltration-Mass[kg]
```

Ventilation

Ventilation is the purposeful flow of air from the outdoor environment directly into a thermal zone in order to provide some amount of non-mechanical cooling. Ventilation as specified by this input syntax is intended to model “simple” ventilation as opposed to the more detailed ventilation investigations that can be performed with the link to COMIS. Simple ventilation in EnergyPlus can be controlled by a schedule and through the specification of minimum and delta temperatures as described below. As with infiltration, the actual flow rate of ventilation can be modified by the temperature difference between the inside and outside environment and the wind speed The basic equation used to calculate ventilation in EnergyPlus is:

$$Ventilation = \left(V_{design}\right)\left(F_{schedule}\right)\left[A + B\left|T_{zone} - T_{odb}\right| + C\left(WindSpeed\right) + D\left(WindSpeed^{2}\right)\right]$$

More advanced ventilation calculations are possible using the EnergyPlus link to the COMIS program.

Field: Zone Name

This field is the name of the zone (ref: Zone) and attaches a particular ventilation statement to a thermal zone in the building.

Field: Schedule Name

This field is the name of the schedule (ref: Schedule) that modifies the maximum design volume flow rate parameter (see next field). This fraction between 0.0 and 1.0 is noted as $F_{schedule}$ in the above equation.

Field: Design Volume Flow Rate

This number (noted as I_{design} in the above equation)is the maximum amount of ventilation expected at design conditions. The flow rate is expressed in units of m^3/s. The design value is modified by the schedule fraction (see previous field) and user specified coefficients (see last four fields).

Field: Minimum Temperature

This is the indoor temperature (in Celsius) below which ventilation is shutoff. This lower temperature limit is intended to avoid overcooling a space and thus result in a heating load. For example, if the user specifies a minimum temperature of 20°C, ventilation is assumed to be available if the zone air temperature is above 20°C. If the zone air temperature drops below 20°C, then ventilation is automatically turned off.

Field: Delta Temperature

This is the temperature difference (in Celsius) between the indoor and outdoor air dry bulb temperatures below which ventilation is shutoff. This is to allow ventilation to be stopped if the temperature outside is too warm and could potentially heat the space. For example, if the user specifies a delta temperature of 2°C, ventilation is assumed to be available if the outside air temperature is at least 2°C cooler than the zone air temperature. If the outside air dry bulb temperature is less than 2°C cooler or warmer than the indoor dry bulb temperature, then ventilation is automatically turned off.

Field: Ventilation Type

This alpha character string defines the type of ventilation as one of the following options: NATURAL, EXHAUST, or INTAKE. Natural ventilation is assumed to be air movement/exchange a result of openings in the building façade and will not consume any fan energy. Values for fan pressure and efficiency for natural ventilation are ignored. For either EXHAUST or INTAKE, values for fan pressure and efficiency define the fan electric consumption. For NATURAL and EXHAUST ventilation, the conditions of the air entering the space are assumed to be equivalent to outside air conditions. For INTAKE ventilation, an appropriate amount of fan heat is added to the air stream.

Field: Fan Pressure Rise

This is the pressure rise experience across the fan in Pascals (N/m^2). This is a function of the fan and plays a role in determining the amount of energy consumed by the fan.

Field: Fan Total Efficiency

This is the total fan efficiency (a decimal number between 0.0 and 1.0). This is a function of the fan and plays a role in determining the amount of energy consumed by the fan.

Field: Constant Term Coefficient

This number is the “A” parameter in the above ventilation equation. It is part of the user specified modifying parameters that are a function of environmental factors. This parameter, however, is a constant under all conditions and is not modified by any environmental effect. As a result, it is dimensionless.

Field: Temperature Term Coefficient

This number is the “B” parameter in the above ventilation equation. It is part of the user specified modifying parameters that are a function of environmental factors. This parameter is modified by the temperature difference between the outside and inside air dry bulb temperatures. The units for this parameter are inverse Celsius.

Field: Velocity Term Coefficient

This number is the “C” parameter in the above ventilation equation. It is part of the user specified modifying parameters that are a function of environmental factors. This parameter is modified by the speed of wind being experienced outside the building. The units for this parameter are s/m.

Field: Velocity Squared Term Coefficient

This number is the “D” parameter in the above ventilation equation. It is part of the user specified modifying parameters that are a function of environmental factors. This parameter is modified by square of the speed of wind being experienced outside the building. The units for this parameter are s^2/m^2.

```
VENTILATION,
  \min-fields 12
       \memo  Ventilation is specified as a design level which is modified by a schedule fraction,
       \memo temperature difference and wind speed:
       \memo  Ventilation=Vdesign * Fschedule * (A + B*(Tzone-Todb) + C*WindSpd + D * WindSpd**2)
  A1 , \field Zone Name
       \required-field
       \type object-list
       \object-list ZoneNames
  A2 , \field SCHEDULE Name
       \required-field
       \type object-list
       \object-list ScheduleNames
  N1 , \field Design Volume Flow Rate
       \required-field
       \units m3/s
       \note  "Vdesign" in Equation
       \type real
       \minimum 0
  N2 , \field Minimum Temperature
       \required-field
       \note this is the indoor temperature below which ventilation is shutoff
       \units C
       \type real
       \minimum -100
       \maximum 100
  N3,  \field Delta Temperature
       \required-field
       \note temperature differential between inside/outside below which ventilation is shutoff
       \units C
       \type real
       \minimum 0
  A3 , \field Ventilation Type
       \required-field
       \type choice
       \key Natural
       \key Intake
       \Exhaust
       \default Natural
```

```
  N4 , \field Fan Pressure Rise
       \required-field
       \note pressure rise across the fan
       \type real
       \minimum 0
       \default 0
  N5 , \field Fan Total Efficiency
       \required-field
       \type real
       \minimum> 0
       \default 1
  N6 , \field Constant Term Coefficient
       \required-field
       \note  "A" in Equation
       \type real
       \default 1
  N7 , \field Temperature Term Coefficient
       \required-field
       \note  "B" in Equation
       \type real
       \default 0
  N8 , \field Velocity Term Coefficient
       \required-field
       \note  "C" in Equation
       \type real
       \default 0
  N9 ; \field Velocity Squared Term Coefficient
       \required-field
       \note  "D" in Equation
       \type real
       \default 0
```

An IDF example:

```
VENTILATION, ZONE 2, BLDG Sch   3,  !- Int Gain Type, Zone, and Schedule
   6.131944    ,  !- Design Level {m3/Sec}
   18.0        ,  !- Minimum temperature {C}
    1.0        ,  !- Delta temperature {C}
  INTAKE       ,  !- Fan Type
  400.0        ,  !- Fan delta pressure{Pa}
  0.9          ,  !- Fan efficiency
  0.6060000    ,  !- Constant Term Coef
  2.0199999E-02,  !- Temp Term Coef
  5.9800001E-04,  !- Velocity Term Coef
  0.0000000E+00;  !- Velocity**2 Term Coef
```

Ventilation Output

Current ventilation output variables:

```
Zone,Sum,Ventilation-Heat Loss[J]
Zone,Sum,Infiltration-Volume[m3]
Zone,Sum,Infiltration-Mass[kg]
Zone,Sum,Infiltration-Fan Electric Consumption[J]
Zone,Sum,Infiltration-Inlet Air Temperature[C]
```

Mixing

In EnergyPlus, the Mixing syntax is intended to allow simplified treatment of air exchange between zones. Note that this statement only affects the energy balance of the “receiving” zone and that this statement will not produce any effect on the “source” zone. Mixing statements can be complementary and include multiple zones, but the balancing of flows between zones is left to the user’s discretion. The use of the Cross Mixing syntax (ref: Cross Mixing) can allow for automatic balancing of flows and energy flow rates between zones but is hindered by the limitation of only a single cross mixing statement per zone. Mixing is entered using the following syntax.

Field: Zone Name

This field is the name of the zone (ref: Zone) receiving the amount of air being exchanged and attaches a particular mixing statement to a thermal zone in the building.

Field: Schedule Name

This field is the name of the schedule (ref: Schedule) that modifies the maximum design volume flow rate parameter (see next field). This fraction between 0.0 and 1.0 modifies the design level parameter.

Field: Design Level

This number is the maximum amount of mixing expected. The flow rate is expressed in units of m^3/s. The design value is modified by the schedule fraction (see previous field).

Field: Source Zone Name

This field is the name of the "source" zone (ref: Zone) that exhausts the amount of air specified by the design level and schedule fields to the zone named in the zone name field.

Field: Delta Temperature

This number controls when mixing air from the source zone is sent to the receiving zone. This parameter is a temperature and is expressed in units of Celsius. If this field is positive, the temperature of the zone from which the air is being drawn (source zone) must be "Delta Temperature" warmer than the receiving zone air or else no mixing occurs. If this field is negative, the temperature of the source zone must be "Delta Temperature" cooler than the receiving zone air or else no mixing occurs. If this parameter is zero, mixing occurs regardless of the relative zone temperatures.

```
MIXING,
  A1 , \field Zone Name
       \type object-list
       \object-list ZoneNames
  A2 , \field SCHEDULE Name
       \type object-list
       \object-list ScheduleNames
  N1 , \field Design Level
       \type real
  A3 , \field Source Zone Name
       \type object-list
       \object-list ZoneNames
  N2 ; \field Delta Temperature
       \units C or K ! this is a temperature difference
       \type real
```

An IDF Example:

```
MIXING,
    Zone1,                  !- Zone Name
    Air Flow Sch,           !- SCHEDULE Name
    50,                     !- Design Level
    Zone2,                  !- Source Zone Name
    0;                      !- Delta Temperature {C or K}
```

Mixing Output

```
Zone,Sum,Mixing-Volume[m3]
Zone,Sum,Mixing-Mass[kg]
```

Cross Mixing

The Cross Mixing syntax is ideally suited for two zones that exchange an equal amount of air between each other and do not have any air exchange with other zones. As with Mixing (ref: Mixing), this is a simplified view of interzone airflow in EnergyPlus. The main difference between Mixing and Cross Mixing is that Cross Mixing has an energy effect on both the source and the receiving zone, thus maintaining both the air mass and energy balances in the two zones.

Cross Mixing can be entered once, in one of the mixing zones; or twice, once for each zone. The object should be entered once if Delta Temperature > 0.0 and it is desirable to have mixing only when the source zone is warmer than the receiving zone. This might be the case when the warmer zone is below the colder zone and the mixing is buoyancy driven. If the zones are next to each other, separated by an open doorway, it would be more suitable to input a cross mixing object for each zone. Then mixing would occur if the zone temperatures differed by Delta Temperature or greater regardless of which is the warmer zone.

If Delta Temperature = 0.0, Cross Mixing can be entered either once or twice: the effect is exactly the same.

Cross Mixing is entered using the following syntax.

Field: Zone Name

This field is the name of the zone (ref: Zone) receiving the amount of air being exchanged and attaches a particular cross mixing statement to a thermal zone in the building.

Field: Schedule Name

This field is the name of the schedule (ref: Schedule) that modifies the maximum design volume flow rate parameter (see next field). This fraction between 0.0 and 1.0 modifies the design level parameter.

Field: Design Level

This number is the maximum amount of mixing expected between the two zones. The flow rate is expressed in units of m^3/s. The design value is modified by the schedule fraction (see previous field).

Field: Source Zone Name

This field is the name of the “source” zone (ref: Zone) that exhausts the amount of air specified by the design level and schedule fields to the zone named in the zone name field. In reality, the “source” and “receiving” zones are interchangeable since the cross-mixed air affects both zones.

Field: Delta Temperature

This number controls when mixing air from the source zone is sent to the receiving zone. This parameter is a temperature and is expressed in units of Celsius. If this field is positive, the temperature of the zone from which air is being drawn (“source zone”) must be “Delta Temperature” warmer than the zone air or no mixing occurs. If this field is zero, mixing occurs regardless of the relative air temperatures. Negative values for “Delta Temperature” are not permitted.

```
CROSS MIXING,
  \min-fields 5
  A1 , \field Zone Name
       \required-field
       \type object-list
       \object-list ZoneNames
  A2 , \field SCHEDULE Name
       \required-field
       \type object-list
       \object-list ScheduleNames
  N1 , \field Design Level
       \type real
       \units m3/s
       \minimum 0
       \default 0
  A3 , \field Source Zone Name
       \required-field
       \type object-list
       \object-list ZoneNames
  N2 ; \field Delta Temperature
       \units C or K ! this is a temperature difference
       \minimum 0.0  ! this value must be greater than or equal to zero
       \type real
       \default 0
```

An IDF Example:

```
CROSS MIXING,
    GARAGE,       !- Zone Name
    Always On,    !- SCHEDULE Name
    0.1,          !- Design Level
    1ST-FLOOR,    !- Source Zone Name
    1.0;          !- Delta temp
CROSS MIXING,
    1ST-FLOOR,    ! Zone Name
    Always On,    !- SCHEDULE Name
    0.1,          !- Design Level
    GARAGE,       ! Source Zone Name
    1.0;          ! Delta temp
```

Cross Mixing Output

Mixing-Volume

The air volume in m^3 entering the zone due to cross mixing during the hour or time step.

Mixing-Mass

The air mass in kg entering the zone due to cross mixing during the hour or time step.

```
Zone,Sum,Mixing-Volume[m3]
Zone,Sum,Mixing-Mass[kg]
```

Overview of the COMIS/EnergyPlus Link

COMIS was developed in 1994 as a stand-alone multizone air flow program with its own input and output processors. In the COMIS/EnergyPlus link, COMIS is called each time step by the EnergyPlus program. Using the zone air temperatures and the wind pressure distribution at the beginning of a time step, COMIS calculates air flows between outside and inside and from zone to zone. These are then used by the EnergyPlus thermal calculation to determine

surface temperatures and zone air temperatures for that time step (which are then used in the next time step to calculate new air flow values, and so on).[2]

Before describing the COMIS input objects in detail, we list all of the objects and then give a short description of what the objects do.

The COMIS input objects are:

COMIS Simulation
COMIS Zone Data
COMIS Surface Data
COMIS Standard Conditions for Crack Data
COMIS Air Flow:Crack
COMIS Air Flow:Opening
COMIS Site Wind Conditions
COMIS External Node
COMIS CP Array
COMIS CP Values

- **COMIS Simulation** defines basic run parameters for the air flow calculation.
- The **COMIS Zone Data** object specifies the ventilation control mode and schedule for the openable windows and doors in the corresponding thermal zone.
- **COMIS Surface Data** indicates whether a heat transfer surface (wall, window, etc.) has a crack or opening and references a **COMIS Air Flow:Crack** or **COMIS Air Flow:Opening** object that gives the air flow characteristics of that crack or opening.
- **COMIS Standard Conditions for Crack Data** is used to normalize crack information that is based on measurements of crack air flow.
- **COMIS Surface Data** also has an associated **COMIS External Node**, that, via the **COMIS Site Wind Conditions**, **COMIS CP Array** and **COMIS CP Values** objects, gives the wind pressure distribution vs. wind direction for that node and, implicitly, for the cracks and openings in the exterior surfaces associated with that node.

Figure 29 shows the relationship among COMIS objects and between COMIS objects and regular EnergyPlus objects. In this figure an arrow from object A to object B means that B is referenced by A, i.e., the data in B is assigned to A or vice-versa. For example, crack or opening data is assigned to COMIS surface data, which in turn is assigned to a particular heat transfer surface.

[2] At the beginning of the simulation, EnergyPlus generates an internal COMIS input file (**eplusout.cif**) based on the building air flow description described in this section, and the exterior environmental conditions and internal zone temperatures. **eplusout.cif** can be used as input to the original COMIS program for testing and debugging purposes. To retain this file add the following line to your idf file: Report, COMISinput;

If EP-Launch is used or the batch files are used to run the EnergyPlus simulation, then this file will be saved as **<filename>.cif** for viewing or other purposes.

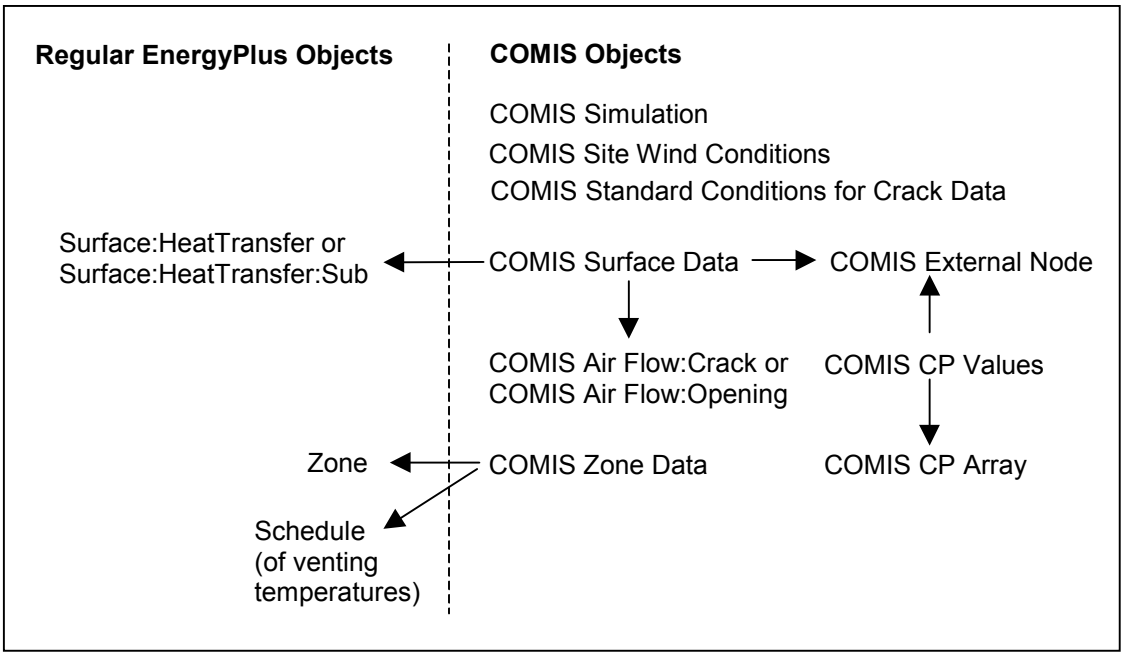

Figure 29. Relationship among COMIS objects (right-hand side) and between COMIS objects and regular EnergyPlus objects. Arrows indicate references from one object to another.

Much of the information needed for the air flow calculation is automatically extracted from the building description for thermal modeling. This includes things like the volume and neutral height of the zones, and the orientation and location of the building surfaces that contain cracks or openings through which air flows. From all of this information the program creates a “pressure-flow network” which is then solved each time step using iterative solution methods to obtain the unknown pressures and air flows.

Figure 30 shows a plan view of a very simple air flow network that you can construct using the above COMIS objects. There are three thermal zones, Zone-1, Zone-2 and Zone-3. There are openable exterior windows—Window-1, Window-2 and Window-3—and openable interior doors—Door-12 and Door-23. Two External Nodes are indicated. ExternalNode-1 is associated with the façade that contains Window-1 and Window-2. ExteranlNode-2 is associated with the façade containing Window-3.

One possible air flow pattern is shown in this figure. The actual air flow pattern in a particular time step, and the size of the flows, depends on many factors, such as (1) what is the wind pressure distribution seen by the exterior windows? (2) are the exterior windows open or closed, and if open, how far are they open? (3) Are the interior doors open or closed, and if open, how far are they open? (4) What are the air temperature differences between zones and between zones and the outside air (which effect buoyancy flows)?

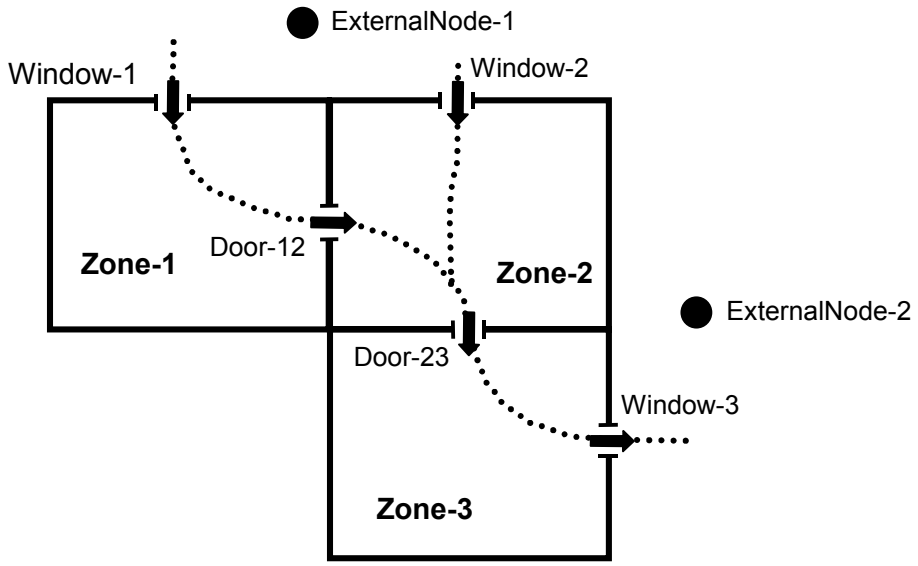

Figure 30. Plan view of a simple air flow network showing a possible air flow pattern in which all of the windows and doors are open.

Figure 30 shows a possible air flow pattern in which all of the windows and doors are open. Associated with the external nodes are wind pressure distributions as a function of wind direction that are input using two COMIS CP Values objects. The nature of the air flows through the windows and doors is specified using **COMIS Air Flow:Opening** objects. The COMIS/EnergyPlus program calculates the flows each time step depending on various factors, including wind direction and speed, size and vertical position of openings, outside air temperature, and zone air temperatures.

COMIS/EnergyPlus Sample Run

3zvent.idf is a sample run that shows the COMIS/EnergyPlus input for natural ventilation of a 3-zone building.

What COMIS/EnergyPlus Can and Cannot Do

Here is a list of some of the things that the COMIS/EnergyPlus calculation can and cannot do.

Can Do

11) Air flow through cracks in exterior or interzone surfaces.

12) Air flow through cracks around windows and doors.

13) Natural ventilation, i.e., air flow through open (or partially open) exterior windows and doors.

14) Control of natural ventilation based on inside/outside temperature or enthalpy difference.

15) Modulation of natural ventilation to prevent large temperature swings.

16) Interzone air flow, i.e., air flow through open interzone windows and doors, and through cracks in interzone surfaces.

17) Account for how air flow depends on buoyancy effects and wind pressure.

18) Account for how wind pressure depends on wind speed, wind direction and surface orientation.

Cannot Do

1) Account for the effect of supply-air and/or return-air flows in a zone when an HVAC air system is present and is operating. This means that the COMIS air flow simulation will give reliable answers only if there is no HVAC system, the HVAC system is off, or the HVAC system is hydronic.

2) Bi-directional flow through large horizontal openings. See discussion below under COMIS Air Flow:Opening.

3) Air circulation and/or air temperature stratification within a thermal zone. For example, you should *not* try to divide a high space, such as an atrium, into subzones separated by artificial horizontal surfaces that have cracks or openings with the expectation that COMIS/EnergyPlus will give you a realistic temperature in each subzone and/or a realistic air flow between subzones.

4) Flow through ducts or other elements of an HVAC air system.

5) Pollutant transport. There are some pollutant-related inputs but they are not used.

6) Air-flow networks that are not connected. This means you cannot model air flow in two or more separate groups of zones. As an example, you will get an error message for the network shown in Figure 31, which is a modification of the legal network in Figure 30. The error message will look like:

```
** COMIS NETWORK ERROR **
   All zones should be connected, but there are  2 isolated groups of zones.
   You can do one of two things:
   (1) Delete the COMIS Zone Data and associated links for each unused zone.
   (2) Add links.
   If you add links, you have to add at least  1 link between these groups.
   Following are the zones and the groups they are in.
   Zone Group   Zone name
      1     0   ZONE-1
      2     1   ZONE-2
      3     1   ZONE-3
   **  Fatal  ** The Network is not properly connected: Program Stop
```

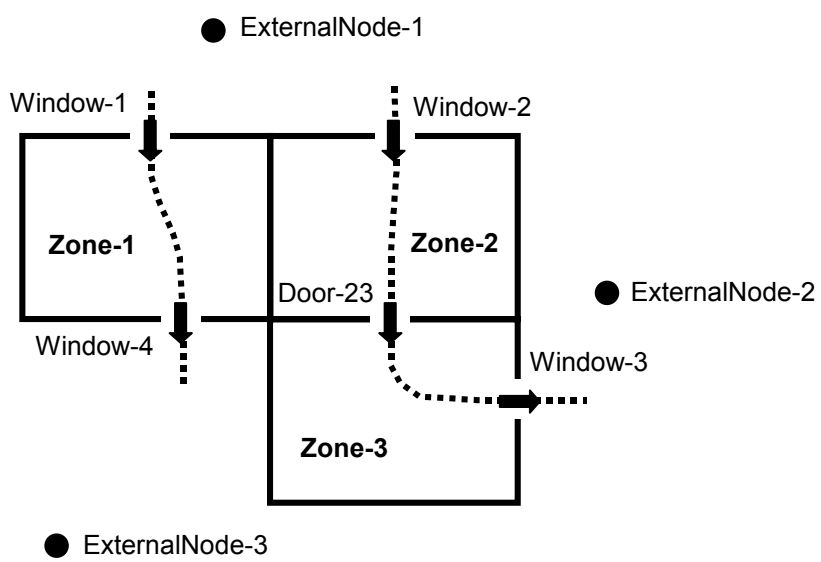

Figure 31. Air-flow network that is illegal in COMIS because there are two separate groups of zones with air flow (one group is Zone-2 plus Zone-3 and the other is Zone-1). To make this legal a link (a crack or

opening) between Zone-1 and Zone-2 would have to be added or the zones in one of the groups would have to be "turned off" as COMIS zones.

Description of the COMIS Input Objects

The following describes the input objects for the COMIS/EnergyPlus air flow calculation. More detailed discussion of the use of the input parameters and suggested values can be found in the *COMIS 3.0 User's Guide*, Lawrence Berkeley National Laboratory, Berkeley CA, 1998. This document and other information are available from LBNL's COMIS web site: http://epb1.lbl.gov/comis/.

In the following descriptions, text in square brackets, […], gives information on the corresponding input parameter in the stand-alone COMIS program, as described in the *COMIS 3.0 User's Guide*.

COMIS Simulation

The COMIS Simulation object is used to define the basic run parameters for the COMIS multi-zone air flow calculations.

Field: Ventilation Simulation Control

Designates whether air flow calculations will be done during the COMIS simulation. The allowable choices are VENT and NO VENT. This input should always be set to VENT.

[See field description under keyword PR-SIMU ("Problem Simulation") in the original COMIS program, which permitted the air flow calculation to be skipped.]

Field: Pollution Simulation Control

Designates whether pollutant transport is modeled during the COMIS simulation. The allowable choices are POL and NO POL. Currently, the pollutant simulation results from COMIS are not passed to EnergyPlus. Therefore, selection of POL will not affect the simulation results except to slow it down. Until the COMIS pollutant simulation is integrated into EnergyPlus, this input should always be set to NO POL.

[See description of this field under keyword PR-SIMU ("Problem Simulation") in the original COMIS program.]

Field: Concentration Simulation Control

Designates whether concentrations for specified pollutants are tracked during the COMIS simulation. The allowable choices are CONC and NO CONC. Currently, the pollutant simulation results from COMIS are not passed to EnergyPlus. Therefore, selection of CONC will not affect the simulation results except to slow it down. Until the COMIS pollutant simulation is integrated into EnergyPlus, the input should always be set to NO CONC.

[See keyword PR-SIMU ("Problem Simulation") in the original COMIS program.]

Field: Under-Relaxation Factor

The factor used to multiply the Newton pressure corrections if pure Newton iteration steps are used. The solver used in COMIS starts first with a number of pure Newton iterations using the specified under-relaxation factor. After these iterations, the solver then switches to a solver originally developed by George Walton of NIST for the AIRNET program with fixed relaxation factors. The practical range for this under-relaxation factor is from 0.50 to 1.00.

[The default for this parameter in the original COMIS program is 1.0, where it is input under the keyword PR-CONT ("Problem Control").]

Field: Absolute Flow Tolerance

The absolute flow tolerance in kg/s for convergence of the iterative solution.

[See description of this field under keyword PR-CONT (“Problem Control”) in the original COMIS program, where its default is 1.0E-6 kg/s.]

Field: Relative Flow Tolerance

The relative flow tolerance for convergence of the iterative solution.

[See description of this field under keyword PR-CONT (“Problem Control") in the original COMIS program, where its default is 1.0E-5.]

Field: Error Estimate for Total Flow per Zone

The Newton pressure correction multiplied by the derivative

d(flowsum per zone)/d(zone pressure)

in kg/s. This is an estimate of the error in the sum of the flows per zone.

[See description of this field under keyword PR-CONT (“Problem Control”) in the original COMIS program, where its default 1.0E-4 kg/s.]

Field: Start Number of Iterations

The number of pure Newton iteration steps done with the previously-defined Under-Relaxation Factor before switching over to the Walton solver with optimum relaxation.

[This field is input under the keyword PR-CONT (“Problem Control") in the original COMIS program, where its default is 1.]

Field: Pressure Limit for Laminar Flow Approximation

The pressure in Pa below which the link air flows are approximated by a linear function. This input is necessary to avoid problems in simulating air flow through large openings.

[This field is input under the keyword PR-CONT (“Problem Control") in the original COMIS program, where its default is 1.0E-4 Pa.]

Field: Flag for Using Old Pressures

Specifies what the COMIS air flow calculation should take as the zone pressures at each time step. These pressures influence the air density in the zones and thus influence the resulting stack effect, especially if the zone reference height is far away from the level of most links, and if the zone pressures are large. The allowable inputs are:

0 Use zero pressures.

1 Use pressures from previous time step.

2 Recalculate air density after every iteration.

[This field is input under the keyword PR-CONT (“Problem Control”) in the original COMIS program, where its default is 0.]

Field: Flag for Pressure Initialization

Specifies whether the iterative air flow calculation should start with the solution of a linearized flow network derived from the input Cp values. Starting with such a solution usually speeds convergence of the solution for the actual non-linear flow network. The allowable inputs are

0 Initialize using solution of linearized flow network.

1 Do not initialize using solution of linearized flow network.

[This field is input under the keyword PR-CONT ("Problem Control") in the original COMIS program, where its default is 0.]

Field: Maximum Number of Iterations

The maximum number of iterations allowed in finding an air flow solution.

[This field is input under the keyword PR-CONT ("Problem Control") in the original COMIS program, where the default is 500.]

There will be an error message if the maximum number of iterations is exceeded in any time step:

```
** Severe  ** COMIS max iterations exceeded; In COMIS SIMULATION set Use Old Pressures = 1, or increase
max iterations or convergence tolerances.
```

In this case the time step's air flow results--and the thermal calculations that depend on these air flows--may be suspect, but the EnergyPlus calculation will not stop. The thermal calculation will use the air flows calculated at the point that the COMIS iteration limit was reached. You should look at the thermal results, such as zone temperatures, to see if they are out of bounds or not.

The text of the error message suggests three ways of avoiding this error, all of which involve changing convergence-control parameters in the COMIS Simulation object. Here is an example input for this object, with some of the convergence control parameters highlighted:

```
COMIS SIMULATION,
    VENT,      !- Ventilation simulation control
    NO POL,    !- Pollution simulation control
    NO CONC,   !- Concentration simulation control
    1.00,      !- Under-relaxation factor {dimensionless}
    1.0E-06,   !- Absolute flow tolerance {kg/s}
    1.0E-06,   !- Relative flow tolerance {dimensionless}
    2.0E-06,   !- Error estimate for total flow per zone {kg/s}
    1,         !- Start number of iterations
    1.0E-04,   !- Limit for laminar flow approximation {Pa}
    0,         !- Flag for Using Old Pressures; 0=start with zero pressures, 1=start from prev TS
    1,         !- Flag for Pressure Initiation; 0 = start with linearized network, 1 = don't
    50,        !- Maximum Number of Iterations
    10.0,      !- Reference height for recorded wind data {m}
    0.14,      !- Wind velocity profile exponent {dimensionless}
    Every 30 Degrees;  !- Name of COMIS Cp Array
```

For this particular example, to increase the probability of convergence:

- Change "Flag for Using Old Pressures" to 1, which makes the program use pressures from the previous time step as starting values for the current time step.
- Change "Flag for Pressure Initiation" to 0, which makes the program start out by solving a linearized system before it begins iterating.
- Increase "Maximum Number of Iterations," from 50 to, say, 500.

If you're still getting "max iterations exceeded" messages, then:

- Increase the Absolute Flow Tolerance, the Relative Flow Tolerance and the Error Estimate for Total Flow Per Zone by a factor of 10 to a 100.

Field: Reference Height for Recorded Wind Data

The height at which the wind speeds on the weather file were measured (m). Based on this reference height, COMIS develops a wind velocity vs. height profile using either a power law or logarithmic function.

[This field is input under the keyword ENV-WIN ("Environment Wind") in the original COMIS program, where its default is 10.0 m.]

Field: Exponent of Wind Velocity Profile

The exponent in the power law function that gives wind velocity vs. height above ground.

[This field is input under the keyword ENV-WIN ("Environment Wind") in the original COMIS program, where its default is 0.14.]

Field: Name of CP Array

This is the name of the COMIS CP Array and its associated COMIS CP Value objects that supply the wind pressure coefficients used in the air flow calculation (ref: COMIS CP Array, COMIS CP Values).

```
COMIS SIMULATION,
      \unique-object
 A1 , \field Ventilation simulation control
      \required-field
      \type choice
      \key VENT
      \key NO VENT
      \default VENT
 A2 , \field Pollution simulation control
      \required-field
      \type choice
      \key POL
      \key NO POL
      \default NO POL
 A3 , \field Concentration simulation control
      \required-field
      \type choice
      \key CONC
      \key NO CONC
      \default NO CONC
 N1 , \field Under-relaxation factor
      \type real
      \units dimensionless
      \default 1.0
 N2 , \field Absolute flow tolerance
      \type real
      \units kg/s
      \default 1.E-6
 N3 , \field Relative flow tolerance
      \type real
      \units dimensionless
      \default 1.E-5
 N4 , \field Error estimate for total flow per zone
      \type real
      \units kg/s
      \default 1.E-4
 N5 , \field Start number of iterations
      \type integer
      \minimum 1
      \maximum 10
      \default 1
 N6 , \field Limit for laminar flow approximation
      \note Flow assumed linear in pressure diff. for pressure diff. < this value
      \type real
      \units Pa
      \default 1.E-4
 N7 , \field Flag for using old pressures
      \type integer
      \note 0=zero pressures to start; 1=use previous-timestep pressures to start;
      \note 2=recalculate air density each iteration.
      \minimum 0
      \maximum 2
      \default 1
 N8 , \field Flag for pressure initiation
      \type integer
      \note 0=start from solution for linearized network; 1=don't do this.
      \minimum 0
      \maximum 1
      \default 0
 N9 , \field Maximum number of iterations
      \type integer
      \minimum 1
      \default 500
 N10, \field Reference height for recorded wind data
      \type real
      \units m
      \default 10
```

```
N11, \field Wind velocity profile exponent
     \type real
     \default 0.14
     \units dimensionless
 A4; \field COMIS CP ARRAY Name
     \type object-list
     \object-list CPSetNames
```

An IDF example:

```
COMIS SIMULATION, ! COMIS run parameters
VENT,             ! Ventilation Simulation Control
NO POL,           ! Pollution Simulation Control
NO CONC,          ! Concentration Simulation Control
1.0,              ! Under-Relaxation Factor
1.0E-05,          ! Absolute Flow Tolerance (kg/s)
1.0E-04,          ! Relative Flow Tolerance
2.0E-05,          ! Error Estimate for Total Flow per Zone (kg/s)
1,                ! Start Number of Iterations
1.0E-04,          ! Pressure Limit for Laminar Flow Approximation (Pa)
1,                ! Flag for Using Old Pressures (1 = use pressures from previous time step)
0,                ! Flag for Pressure Initialization (0 = solve linearized network to start)
500,              ! Maximum Number of Iterations
10.0,             ! Reference Height for Recorded Wind Data (m)
0.14 ,            ! Exponent of Wind Velocity Profile
3ZVent CP Data;   ! Name of CP Array
```

COMIS Air Flow:Crack

The COMIS Air Flow:Crack object specifies the properties of air flow through a crack. The following power law form is used that gives air flow through the crack as a function of the pressure difference across the crack:

$$Q = C_Q \left(\Delta P\right)^n \qquad \text{crack air flow equation}$$

where Q = air mass flow (kg/s)
C_Q = air mass flow coefficient (kg/s-Pa^n)
ΔP = pressure difference across crack (Pa)
n = air flow exponent

Field: Name of Crack Air Flow Data

This is a name for this COMIS Air Flow:Crack object. It is referenced by a COMIS Surface Data object. This name must begin with 'CR' and can be up to 10 characters in length (including the CR).

[This field is input as part of the definition of a Crack component under the keyword NET-AIR ("Network Air Flow") in the original COMIS program.]

Field: Air Mass Flow Coefficient

The value of the air mass flow coefficient, C_Q, in the crack air flow equation. It has units of kg/s at 1Pa.

[This field is input as part of the definition of a Crack component (-CR) under the keyword NET-AIR ("Network Air Flow") in the original COMIS program, where the default is 0.001 kg/s at 1Pa.]

Field: Air Mass Flow Exponent

The value of the exponent, n, in the crack air flow equation. It should be between 0.5 and 1.0.

[This field is input as part of the definition of a Crack component under the keyword NET-AIR ("Network Air Flow") in the original COMIS program.]

Field: Crack Length

This field is not used and should be left at its default value of 1.0 m.

[This field is input as part of the definition of a Crack component under the keyword Net-AIR ("Network Air Flow") in the original COMIS program, where the default is 1.0 m.]

Field Set – Pollutant Filter Efficiencies

The following three fields are applicable to each of up to three different pollutants.

Field: Pollutant #1 Filter Efficiency

The fraction of the first of three defined pollutants that will not pass through the crack. A value of 0.3 means that 30% of the pollutant will disappear and 70% will go through the crack. Since pollutant transport and dispersion has not been implemented in the COMIS/EnergyPlus, a value of 0.0 can be entered.

[This field is input as part of the definition of a crack component under the keyword NET-AIR ("Network Air Flow") in the original COMIS program.]

Field: Pollutant #2 Filter Efficiency

See description of Pollutant #1 Filter Efficiency.

Field: Pollutant #3 Filter Efficiency

See description of Pollutant #1 Filter Efficiency.

```
COMIS AIR FLOW:Crack,
 A1 , \field Name
      \note Must begin with "CR".
      \note Limited to 10 characters including the CR.
      \required-field
      \type alpha
      \reference AirFlowCrackNames
      \reference AirFlowNames
 N1 , \field Air Mass Flow Coefficient
      \type real
      \units kg/s @ 1Pa
      \default 0.001
 N2 , \field Air Mass Flow Exponent
      \required-field
      \units dimensionless
      \type real
 N3 , \field Crack Length
      \type real
      \note Unused
      \units m
      \default 1.0
 N4 , \field Pollutant #1 Filter Efficiency
      \type real
      \note unused
      \units dimensionless
      \default 0.0
 N5 , \field Pollutant #2 Filter Efficiency
      \type real
      \note unused
      \units dimensionless
      \default 0.0
 N6 ; \field Pollutant #3 Filter Efficiency
      \type real
      \note unused
      \units dimensionless
      \default 0.0
```

An IDF example:

```
COMIS AIR FLOW:CRACK,  ! Definition of a crack type
  CR-1,                ! Name (up to 10 characters starting with CR)
  0.01,                ! Air Mass Flow Coefficient
  0.667,               ! Air Mass Flow Exponent
  1.0,                 ! Crack Length (unused)
  0,                   ! Pollutant #1 Filter Efficiency (unused)
  0,                   ! Pollutant #2 Filter Efficiency (unused)
  0;                   ! Pollutant #3 Filter Efficiency (unused)
```

COMIS Standard Conditions for Crack Data

This input is used to normalize measured crack data for the temperature, pressure, and humidity under which the data were collected. If the crack characteristics are based on estimated engineering values and not actual measured data, the default values indicated below should be entered.

[The following fields are input under the keyword NORMCR ("Standard Conditions for Crack Data") in the original COMIS program.]

Field: Standard Temperature for Crack Data

The standard temperature in ^{O}C under which the Crack Data were obtained.

[The default for this field in the original COMIS program is 20C.]

Field: Standard Barometric Pressure for Crack Data

The standard barometric pressure in kPa under which the Crack Data were obtained.

[The default for this field in the original COMIS program is standard atmospheric pressure, 101.325 kPa.]

Field: Standard Humidity Ratio for Crack Data

The standard humidity ratio in g/kg under which the Crack Data were obtained.

[The default for this field in the original COMIS program is 0 g/kg.]

```
COMIS STANDARD CONDITIONS FOR CRACK DATA,
      \unique-object
N1 ,  \field Standard Temperature for Crack Data
      \required-field
      \type real
      \units C
N2 ,  \field Standard Barometric Pressure for Crack Data
      \required-field
      \type real
      \units kPa
N3 ;  \field Standard Humidity Ratio for Crack Data
      \required-field
      \type real
      \units g/kg
```

IDF Example:

```
COMIS STANDARD CONDITIONS FOR CRACK DATA,
  20,             ! Standard Temperature for Crack Data (C)
  101.32,         ! Standard Barometric Pressure for Crack Data
  5;              ! Standard Humidity Ratio for Crack Data (g/kg)
```

COMIS Air Flow: Opening

This object specifies the properties of air flow through windows and doors when they are closed or open. The fields are similar to those for COMIS Air Flow:Crack when the window or door is closed, but additional fields are required to describe the air flow characteristics when the window or door is open. These additional fields include opening type, opening dimensions, degree of opening, and opening schedule.

COMIS assumes that open windows or doors are vertical or close to vertical; for this reason they are also called “Large Vertical Openings.” Such openings can have air flow moving simultaneously in two different directions depending on stack effects and wind conditions (for example, flow from inside to outside at the top of a window and from outside to inside at the bottom). COMIS models such two-directional flow, but only for vertical openings.

COMIS does not have a model for bi-directional flow through large horizontal openings. For this reason, **COMIS Air Flow:Opening should not be used for horizontal openings**. The best you can do in this case is to put a COMIS Air Flow:Crack in a horizontal surface and use a large air mass flow coefficient. Crack flow is assumed to be uni-directional in any given time step (but can reverse flow direction from time step to time step).

Field: Name

The name of this COMIS Air Flow:Opening object. It is referenced by a COMIS Surface Data object. The name can be up to 10 characters long.

[This field is input as part of the definition of a window or door component under the keyword NET-AIR (“Network Air Flow") in the original COMIS program.]

Field: Air Mass Flow Coefficient When Window or Door Is Closed

Crack flow is assumed when the window or door is closed. In this case, the value of this field is the air mass flow coefficient, C_Q (per meter of crack) in the crack air flow equation (ref: COMIS Air Flow:Crack). There is no default.

The program will automatically generate four cracks around the perimeter of the window/door--one along the bottom, one along the top, and one on each side.

[This field is input as part of the definition of a window or door component under the keyword NET-AIR (“Network Air Flow") in the original COMIS program.]

Field: Air Mass Flow Exponent When Window or Door Is Closed

Crack flow is assumed when the window or door is closed. In this case, the value of this field is the exponent, n, in the crack air flow equation (ref: COMIS Air Flow:Crack). There is no default value.

[This field is input as part of the definition of a window or door component under the keyword NET-AIR (“Network Air Flow") in the original COMIS program.]

Field: Type of Large Vertical Opening

This is an integer that specifies the type of window or door. (Open windows or doors are also called Large Vertical Openings (LVOs). The allowable values are 1 and 2:

1: an LVO that is rectangular (i.e., a rectangular window or door).

2: an LVO that pivots about a horizontal axis (i.e., a horizontally-pivoting window).

There is no default value.

[This field is input as part of the definition of a window or door component under the keyword NET-AIR (“Network Air Flow") in the original COMIS program.].

Field: Extra Crack Length for LVO Type 1 With Multiple Openable Parts, or, Height of Pivoting Axis for LVO Type 2

Specifies window or door characteristics that depend on the LVO type.

For LVO Type 1 (rectangular windows and doors) this field is the extra crack length in meters due to multiple openable parts, if present. “Extra” here means in addition to the length, calculated by the program, of the cracks on the top, bottom and sides of the window/door.

For LVO Type 2 (horizontally-pivoting windows) this field gives the height of the pivoting axis measured from the bottom of the glazed part of the window (m).

[This field combines two inputs that are part of the definition of a window or door component under the keyword NET-AIR (“Network Air Flow") in the original COMIS program.]

Field: Number of Sets of Opening Factor Data

This is the number of the following sets of data for opening factor, discharge coefficient, width factor, height factor, and start height factor. From two to four of these sets must be defined. The first set should be for Opening Factor = 0.0 and the last set should be for Opening Factor = 1.0. For example, if only two sets are defined, the first set should be for Opening Factor = 0.0 and the second set should be for Opening Factor = 1.0, as shown below in the IDF Example.

An “opening factor” refers to the amount that a window or door is opened. The program interpolates each time step between the values of discharge coefficient, width factor, etc., in these sets using the opening factor for the window or door for the time step. (See discussion

under the field Window/Door Opening Factor in the COMIS Surface Data object for how COMIS/EnergyPlus determines the time-step value of the opening factor.)

[This field is not specified in the original COMIS program.]

Field: Opening Factor #1

The first opening factor of a window or door. The allowable range of values is from 0.0 to 1.0 and there is no default.

For LVO Type 1 (rectangular window or door), the Opening Factor corresponds to the fraction of window or door that is opened.

For LVO Type 2 (horizontally pivoting windows), the Opening Factor is determined by the window opening angle. For example, an opening angle of 45° corresponds to an Opening Factor of 0.50 since the maximum opening angle is 90°.

[This field combines two inputs that are part of the definition of a window or door component under the keyword NET-AIR (“Network Air Flow") in the original COMIS program.]

Field: Discharge Coefficient for Opening Factor #1

The discharge coefficient of the window or door for Opening Factor #1. The range is 0.0 to 1.0. The Discharge Coefficient indicates the fractional effectiveness for air flow through a window or door at that Opening Factor.

[This field combines two inputs that are part of the definition of a window or door component under the keyword NET-AIR (“Network Air Flow") in the original COMIS program.]

Note: In the following, “window width” and “window height” are glazing dimensions; they do not include the frame, if present.

Field: Width Factor for Opening Factor #1

The Width Factor of the window or door for Opening Factor #1. The Width Factor is the opening width divided by the window or door width (see Figure 32).

[This field is input as part of the definition of a window or door component under the keyword NET-AIR (“Network Air Flow") in the original COMIS program.]

Field: Height Factor for Opening Factor #1

The Height Factor of the window or door for Opening Factor #1. The Height Factor is the opening height divided by the window or door height (see Figure 32).

[This field is input as part of the definition of a window or door component under the keyword NET-AIR (“Network Air Flow") in the original COMIS program.]

Field: Start Height Factor for Opening Factor #1

The Start Height Factor of the window or door for Opening Factor #1. The Start Height Factor is the Start Height divided by the window or door height (see Figure 32). Start Height is the distance between the bottom of the window or door and the bottom of the window or door opening. The sum of the Height Factor and the Start Height Factor must be less than 1.0 in order to have the opening within the window or door.

[This field is input as part of the definition of a window or door component under the keyword NET-AIR (“Network Air Flow") in the original COMIS program.]

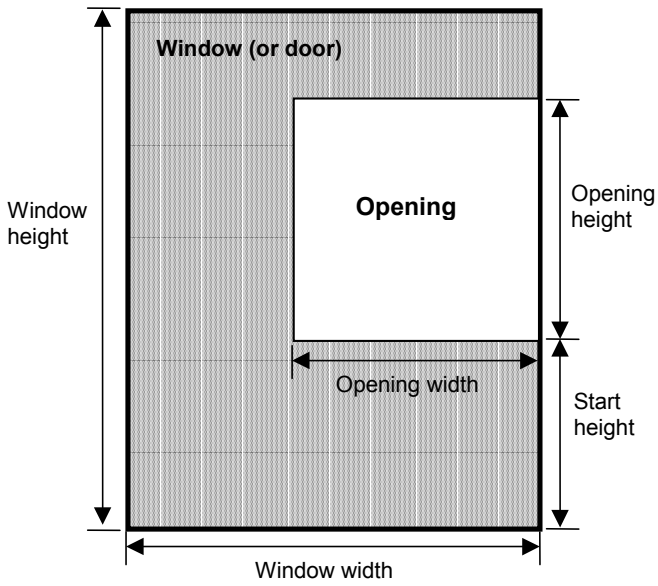

$$Width\ Factor = \frac{Opening\ Width}{Window\ Width}$$

$$Height\ Factor = \frac{Opening\ Height}{Window\ Height}$$

$$Start\ Height\ Factor = \frac{Start\ Height}{Window\ Height}$$

Figure 32. Window (or door) showing geometrical factors associated with an opening through which air flows.

The definitions of the following fields are analogous to those given above for Opening Factor #1, etc.

Field: Opening Factor #2
Field: Discharge Coefficient for Opening Factor #2
Field: Width Factor for Opening Factor #2
Field: Height Factor for Opening Factor #2
Field: Start Height Factor for Opening Factor #2

Field: Opening Factor #3
Field: Discharge Coefficient for Opening Factor #3
Field: Width Factor for Opening Factor #3
Field: Height Factor for Opening Factor #3
Field: Start Height Factor for Opening Factor #3

Field: Opening Factor #4
Field: Discharge Coefficient for Opening Factor #4
Field: Width Factor for Opening Factor #4
Field: Height Factor for Opening Factor #4
Field: Start Height Factor for Opening Factor #4

Field: Pollutant #1 Filter Efficiency

The filter efficiency of pollutant #1. This is the fraction of the pollutant that will not pass through the window or door opening. A filter efficiency of 0.3 means that 30% of the pollutant will disappear and 70% will go through the opening. <u>This value is not used since pollutant transport and dispersion has not been implemented in the COMIS/EnergyPlus link.</u>

[This field is input as part of the definition of a window or door component under the keyword NET-AIR (“Network Air Flow") in the original COMIS program.]

The definition of the following fields is analogous to that given for Pollutant #1 Efficiency.

Field: Pollutant #2 Filter Efficiency
Field: Pollutant #3 Filter Efficiency
Field: Pollutant #4 Filter Efficiency

Field: Pollutant #5 Filter Efficiency

```
COMIS AIR FLOW:Opening,
 A1 , \field Name
      \note Limited to 10 characters
      \required-field
      \type alpha
      \reference OpeningTypeNames
      \reference AirFlowNames
 N1 , \field Air Mass Flow Coefficient When Window or Door Is Closed
      \required-field
      \type real
      \units kg/s @ 1Pa per m crack length
 N2 , \field Air Mass Flow Exponent When Window or Door Is Closed
      \required-field
      \units dimensionless
      \type real
 N3 , \field Type of Large Vertical Opening (LVO)
      \required-field
      \type integer
 N4 , \field Extra Crack Length for LVO Type 1 With Multiple Openable Parts, or, Height of Pivoting Axis
for LVO Type 2
      \type real
      \units m
      \default 0.0
 N5 , \field Number of Opening Factor Values
      \required-field
      \type integer
      \minimum 2
      \maximum 4
N6 , \field Opening Factor #1
      \type real
      \units dimensionless
      \default 0.0
 N7 , \field Discharge Coefficient for Opening Factor #1
      \type real
      \units dimensionless
      \default 0.0
 N8 , \field Width Factor for Opening Factor #1
      \type real
      \units dimensionless
      \default 0.0
 N9 , \field Height Factor for Opening Factor #1
      \type real
      \units dimensionless
      \default 0.0
 N10, \field Start Height Factor for Opening Factor #1
      \type real
      \units dimensionless
      \default 0
```

```
N11, \field Opening Factor #2
     \type real
     \units dimensionless
     \default 0
N12, \field Discharge Coefficient for Opening Factor #2
     \type real
     \units dimensionless
     \default 0
N13, \field Width Factor for Opening Factor #2
     \type real
     \units dimensionless
     \default 0.0
N14, \field Height Factor for Opening Factor #2
     \type real
     \units dimensionless
     \default 0.0
N15, \field Start Height Factor for Opening Factor #2
     \type real
     \units dimensionless
     \default 0.0
N16, \field Opening Factor #3
     \type real
     \units dimensionless
     \default 0.0
N17, \field Discharge Coefficient for Opening Factor #3
     \type real
     \units dimensionless
     \default 0.0
N18, \field Width Factor for Opening Factor #3
     \type real
     \units dimensionless
     \default 0.0
N19, \field Height Factor for Opening Factor #3
     \type real
     \units dimensionless
     \default 0.0
N20, \field Start Height Factor for Opening Factor #3
     \type real
     \units dimensionless
     \default 0.0
N21, \field Opening Factor #4
     \type real
     \units dimensionless
     \default 0.0
N22, \field Discharge Coefficient for Opening Factor #4
     \type real
     \units dimensionless
     \default 0.0
N23, \field Width Factor for Opening Factor #4
     \type real
     \units dimensionless
     \default 0.0
N24, \field Height Factor for Opening Factor #4
     \type real
     \units dimensionless
     \default 0.0
N25, \field Start Height Factor for Opening Factor #4
     \type real
     \units dimensionless
     \default 0.0
N26, \field Pollutant #1 Filter Efficiency
     \type real
     \units dimensionless
     \default 0.0
     \note Unused
N27, \field Pollutant #2 Filter Efficiency
     \type real
     \units dimensionless
     \default 0.0
     \note Unused
N28, \field Pollutant #3 Filter Efficiency
```

```
     \type real
     \units dimensionless
     \default 0.0
     \note Unused
N29, \field Pollutant #4 Filter Efficiency
     \type real
     \units dimensionless
     \default 0.0
     \note Unused
N30; \field Pollutant #5 Filter Efficiency
     \type real
     \units dimensionless
     \default 0.0
     \note Unused
```

An IDF example:

```
 COMIS AIR FLOW:OPENING,
   WI-1,    ! Name
   0.001,   ! Air Mass Flow Coefficient When Window or Door Is Closed
   0.667,   ! Air Mass Flow Exponent When Window or Door Is Closed
   1,       ! Type of Large Vertical Opening (1=rectangular window or door)
   0.0,     ! Extra crack length
   2,       ! Number of Sets of Opening Factor Data (minimum = 2, maximum = 4)
   0.0,     ! Opening Factor #1
   0.5,     ! Discharge Coefficient for Opening Factor #1
   0.0,     ! Width Factor for Opening Factor #1
   1.0,     ! Height Factor for Opening Factor #1
   0.0,     ! Start Height Factor for Opening Factor #1
   1.0,     ! Opening Factor #2
   0.6,     ! Discharge Coefficient for Opening Factor #2
   1.0,     ! Width Factor for Opening Factor #2
   1.0,     ! Height Factor for Opening Factor #2
   0.0,     ! Start Height Factor for Opening Factor #2
   , , , , ,    ! Opening Factor data set #3
   , , , , ,    ! Opening factor data set #4
   0.0, 0.0, 0.0, 0.0, 0.0;  ! Pollutant Filter Efficiencies (unused)
```

COMIS Surface Data

The COMIS Surface Data object specifies the properties of a “link” through which air flows. In COMIS/EnergyPlus this link is always associated with a heat transfer surface. A link can be a crack in an exterior or interior heat transfer surface, or the link can be an exterior or interior window or door that can be opened to allow air flow.

There can be multiple COMIS Surface Data objects associated with a given heat transfer surface. This allows a heat transfer surface to have two or more cracks.

Field: Name of Associated Heat Transfer Surface

This is the name of the corresponding heat transfer surface (wall, roof, ceiling, floor, window, door or glass door).

Information on this heat transfer surface is used by the program as follows:

(1) For a link associated with an exterior heat transfer surface: air flows through this link between the outside environment and the thermal zone to which the surface belongs.

(2) For a link associated with an interior (i.e., interzone) heat transfer surface: air flows through this link between the thermal zones separated by the surface.

(3) To determine the height of the link, which is used in calculating buoyancy-related flow through the link.

An interzone surface is defined twice in EnergyPlus, once in each of the zones that the surface separates. Therefore, an interzone surface has two names. **Either of these names can be used in COMIS Surface Data for "Name of Associated Heat Transfer Surface." But do not enter two COMIS Surface Data's corresponding to the two names. This would cause the air flow through the surface to be double counted.**

[This field does not appear in the original COMIS program.]

Field: Name of Associated COMIS Air Flow:Crack or COMIS Air Flow:Opening

The name of the COMIS Air Flow:Crack or COMIS Air Flow:Opening object associated with this air flow link.

If the name of a COMIS Air Flow:Opening is given here, then Name of Associated Heat Transfer Surface, above, must be that of a window, door or glass door. Otherwise you will get an error message.

If the name of a COMIS Air Flow:Crack is given here, the program will position the crack at the average height of the associated heat transfer surface.

[This field is input under the keyword NET-LIN ("Network Links") in the original COMIS program.]

Field: COMIS External Node Name

The name of the associated COMIS External Node object, which determines the wind pressure coefficients for the heat transfer surface. Used only if Name of Associated Heat Transfer Surface is that of an exterior surface.

[This field is input as the "From" node under the keyword NET-LIN ("Network Links") in the original COMIS program.]

Field: Window/Door Opening Factor, or Crack Factor

If this link is associated with a **COMIS Air Flow:Opening** object (which means it is an openable window or door), then this field is called "Window/Door Opening Factor," which is the value of the Opening Factor that is in effect when the Vent Temperature Schedule (defined in COMIS Zone Data) indicates that this window or door is open.

COMIS/EnergyPlus uses a combination of factors to determine the actual opening area for a window or door when it is venting. For example, consider a window that is 1.5m high and 2.0m wide (excluding frame). Assume that the COMIS Air Flow:Opening for this window has Type of Large Vertical Opening = 1 (non-pivoting window), Height Factor = 0.5 and Width Factor = 0.8. Then when the window is fully open, the opening area = height of opening (0.5x1.5) times width of opening (0.8x2.0) = 0.75x1.6 = 1.2 m^2. If the Window/Door Opening Factor is 0.75, then the opening area = 0.75x1.2 = 0.9 m^2.

If, in addition, the window is in a thermal zone for which opening modulation has been specified (ref: COMIS Zone Data) and the multiplication factor due to modulation is 0.3 in a particular time step, then the actual opening factor that time step = 0.3x0.75 = 0.225 and the actual opening area that time step = 0.3x0.9 = 0.27 m^2.

If this link is associated with a **COMIS Air Flow:Crack** object, then this field is called "Crack Factor." It is used in the following expression for the air flow through the crack, where it multiplies the air mass flow coefficient, C_Q , input in COMIS Air Flow:Crack:

$$Q = (\text{Crack Factor})*C_Q\left(\Delta P\right)^n \qquad \text{crack air flow equation}$$

where Q = air mass flow (kg/s)
C_Q = air mass flow coefficient (kg/s @ 1 Pa)
ΔP = pressure difference across crack (Pa)

n = air flow exponent

Using Crack Factor allows you to use the same COMIS Air Flow:Crack for two or more different heat transfer surfaces whose cracks differ only in their air mass flow coefficient (perhaps because of different crack lengths).

[This field is input as the "Factor/Actual RPM/Value" under the keyword NET-LIN (“Network Links”) in the original COMIS program.]

```
COMIS Surface Data,
  A1, \field Name of Associated EnergyPlus Surface
      \required-field
      \type object-list
      \object-list SurfAndSubSurfNames
  A2, \field Name of Associated COMIS Air Flow:Crack or COMIS Air Flow:Opening
      \note this field is limited to 10 characters
      \required-field
      \type object-list
      \object-list AirFlowNames
  A3, \field External Node Name
      \type object-list
  N1; \field Crack Actual Value or Window Open Factor for Ventilation
      \type real
      \units dimensionless
      \default 0
```

IDF Examples:

```
COMIS SURFACE DATA,
   Surface_1,  ! Associated heat transfer surface
   CR-1,       ! COMIS Air Flow Crack Type
   Facade3,    ! COMIS External Node Name
   1;          ! COMIS Crack Factor

COMIS SURFACE DATA,
   Window1,  ! Associated heat transfer surface
   WI-1,     ! COMIS Air Flow Opening Type
   Facade3,  ! COMIS External Node Name
   0.5;      ! COMIS Window Opening Factor
```

```
COMIS SURFACE DATA,
    Surface_2,  ! Associated heat transfer surface
    CR-1,       ! COMIS Air Flow Crack Type
    Facade4,    ! COMIS External Node Name
    1;          ! COMIS Crack Factor

COMIS SURFACE DATA,
    Surface_3, ! Associated heat transfer surface (an interior, interzone surface)
    CRcri,     ! COMIS Air Flow Crack Type
    ,          ! COMIS External Node Name (not used for interior, interzone surfaces)
    1;         ! COMIS Crack Factor
```

COMIS Zone Data

The COMIS Zone Data object allows you to choose various quantities associated with control of natural ventilation through openable windows. Only windows or doors in the zone that have an associated COMIS Surface Data object are considered openable as far as natural ventilation is concerned.

Field: Name of Associated EnergyPlus Thermal Zone

The name of the EnergyPlus thermal zone corresponding to the COMIS zone.

[This field is input under the keyword NET-ZONes in the original COMIS program.]

Field: Vent Temperature Schedule

The name of a schedule of zone-air temperature set points that controls opening of windows and doors in the thermal zone to provide natural ventilation. This schedule consists of weeks and days, with the days containing the ventilation temperature setting in ºC for each hour of the day. This ventilation temperature is the temperature above which all the openable windows and doors in the zone will be opened if the conditions described under the following Ventilation Control Mode are met.

The Vent Temperature Schedule applies only to windows and doors in the zone that have an associated COMIS Surface Data object.

(The discussion under the field Window/Door Opening Factor in the COMIS Surface Data object describes how the actual opening area of a window or door in a particular time step is determined.)

[This opening control logic does not exist in the original COMIS program.]

Field: Ventilation Control Mode

Specifies the type of natural ventilation control.

Let

T_{out} = outside air temperature

T_{zone} = zone air temperature

T_{set} = Vent temperature schedule value

H_{zone} = specific enthalpy of zone air

H_{out} = specific enthalpy of outside air

Then there are four allowed values of Ventilation Control Mode:

Temperature: The windows/doors are opened if $T_{zone} > T_{out}$ **and** $T_{zone} > T_{set}$.

Enthalpic: The windows/doors are opened if $H_{zone} > H_{out}$ **and** $T_{zone} > T_{set}$.
Constant: The windows/doors are <u>open</u> at all times independent of indoor or outdoor conditions.

NoVent: The windows/doors are <u>closed</u> at all times independent of indoor or outdoor conditions.

Modulation of Openings

The following four fields can be used to modulate the window/door openings when Ventilation Control Mode = Temperature or Enthalpic. These fields determine a factor between 0 and 1 that multiplies the opening factor of each window and door in the zone according to the control action shown in Figure 33 for Ventilation Control Mode = Temperature and in Figure 34 for Ventilation Control Mode = Enthalpic. Modulation of the openings can reduce the large temperature swings that can occur if the windows/doors are too far open when they are venting, especially when there is a large inside-outside temperature difference.

The modulation takes the following form when Ventilation Control Mode = Temperature:

$T_{zone} - T_{out} \leqslant$ [Lower Value on Inside/Outside Temperature Difference for Modulating the Venting Open Factor] ➔ Multiplication factor = 1.0

[Lower Value on Inside/Outside Temperature Difference for Modulating the Venting Open Factor] < T_{zone} - T_{out} < [Upper Value on Inside/Outside Temperature Difference for Modulating the Venting Open Factor] ➔ Multiplication factor varies linearly from 1.0 to [Limit Value on Multiplier for Modulating Venting Open Factor]

T_{zone} - T_{out} ⩾ [Upper Value on Inside/Outside Temperature Difference for Modulating the Venting Open Factor] ➔ Multiplication factor = [Limit Value on Multiplier for Modulating Venting Open Factor]

One way of "tuning" the following modulation control parameters is to perform a sensitivity analysis for winter and/or summer design days to determine what combination of values causes the biggest reduction in zone air temperature fluctuations due to venting.

Note that the default values of the following fields are such that, if none of the fields are specified, modulation will not occur.

Field: Limit Value on Multiplier for Modulating Venting Open Factor

See Figure 33 or Figure 34. Default = 1.0.

Field: Lower Value on Inside/Outside Temperature Difference for Modulating the Venting Open Factor

See Figure 33. Applies only if Ventilation Control Mode = Temperature. Default = 0K.

Field: Upper Value on Inside/Outside Temperature Difference for Modulating the Venting Open Factor

See Figure 33. Applies only if Ventilation Control Mode = Temperature. Default = 100K.

Field: Lower Value on Inside/Outside Enthalpy Difference for Modulating the Venting Open Factor

See Figure 34. Applies only if Ventilation Control Mode = Enthalpic. Default = 0 J/kg

Field: Upper Value on Inside/Outside Enthalpy Difference for Modulating the Venting Open Factor

See Figure 34. Applies only if Ventilation Control Mode = Enthalpic. Default = 300,000 J/kg.

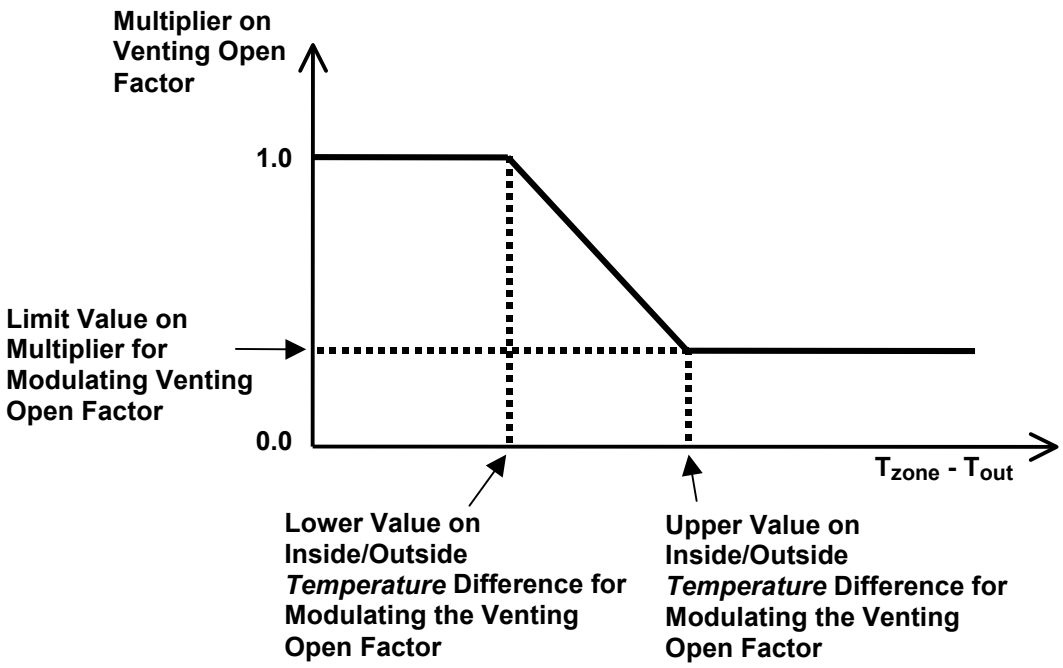

Figure 33. Modulation of venting area according to inside-outside temperature difference.

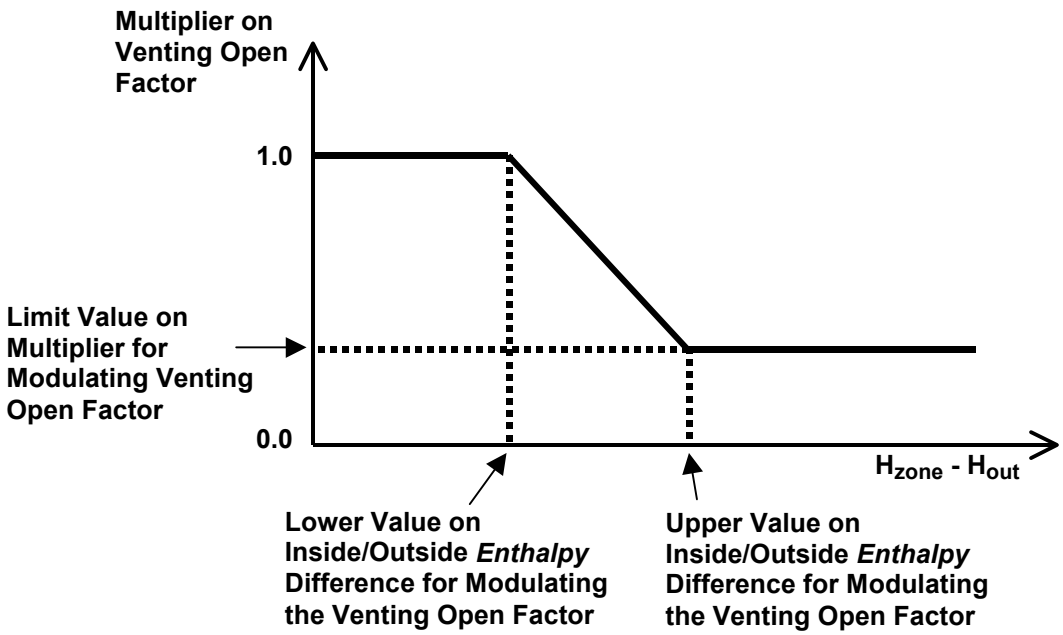

Figure 34. Modulation of venting area according to inside-outside enthalpy difference.

```
COMIS Zone Data,
       \min-fields 8
  A1, \field Name of Associated Thermal Zone
      \required-field
      \type object-list
      \object-list ZoneNames
  A2, \field Vent Temperature Schedule
      \note this field required except when Ventilation Control Mode=NOVENT
      \type object-list
      \object-list ScheduleNames
  A3, \field Ventilation Control Mode
      \required-field
       \type choice
       \key TEMPERATURE
       \key ENTHALPIC
       \key CONSTANT
       \key NOVENT
         \note When Ventilation Control Mode = TEMPERATURE or ENTHALPIC,
         \note the following two fields are used to modulate the Ventilation Open Factor
         \note for all of the window and/or door openings in the zone
         \note according to the zone's inside-outside temperature or enthalpy difference.
  N1, \field Limit Value on Multiplier for Modulating Venting Open Factor
       \note Not applicable if Ventilation Control Mode = CONSTANT or NOVENT
       \type real
       \units dimensionless
       \minimum 0.0
       \maximum 1.0
       \default 1.0
  N2, \field Lower Value on Inside/Outside Temperature Difference for Modulating the Venting Open Factor
       \note Applicable only if Ventilation Control Mode = TEMPERATURE
       \type real
       \units K
       \minimum 0.0
       \default 0.0
  N3, \field Upper Value on Inside/Outside Temperature Difference for Modulating the Venting Open Factor
       \note Applicable only if Ventilation Control Mode = TEMPERATURE
       \note This value must be greater than the corresponding lower value (previous field)
       \type real
       \units K
```

```
       \minimum> 0.0
       \default 100.0
  N4, \field Lower Value on Inside/Outside Enthalpy Difference for Modulating the Venting Open Factor
       \note Applicable only if Ventilation Control Mode = ENTHALPIC
       \type real
       \units J/kg
       \minimum 0.0
       \default 0.0
  N5; \field Upper Value on Inside/Outside Enthalpy Difference for Modulating the Venting Open Factor
       \note Applicable only if Ventilation Control Mode = ENTHALPIC
       \note This value must be greater than the corresponding lower value (previous field)
       \type real
       \units J/kg
       \minimum> 0.0
       \default 300000.0
```

IDF Example:

```
COMIS ZONE DATA,
    WEST_ZONE,  !- Name of Associated Thermal Zone
    WindowVentSched,  !- Vent Temperature Schedule
    Temperature,  !- Ventilation Control Mode (Temperature, Enthalpic, Constant, or NoVent)
    0.3,          !- Limit Value on Multiplier for Modulating Venting Open Factor
    5.0,          !- Lower Value on Inside/Outside Temperature Difference for Modulating the
                  !-  Venting Open Factor
    10.0,         !- Upper Value on Inside/Outside Temperature Difference for Modulating the
                  !-  Venting Open Factor
    ,             !- Lower Value on Inside/Outside Enthalpy Difference for Modulating the
                  !-  Venting Open Factor
    ;             !- Upper Value on Inside/Outside Enthalpy Difference for Modulating the
                  !-  Venting Open Factor
```

COMIS Site Wind Conditions

The site wind conditions define the characteristics of the wind field near the building for a given wind direction. A different site wind condition should be defined for each wind direction.

Field: Wind Direction

The wind direction angle corresponding to the environmental parameters specified in the following three fields. The wind direction is given by angle measured clockwise from geographic north that ranges from 0 to 360 degrees.

[This field is input under the keyword ENV-WIN ("Environment Wind") in the original COMIS program. The default in the original COMIS program is 0 degress, i.e., wind from the north.]

Field: Plan Area Density

The density of surrounding buildings over a reference area surrounding the building that extends from a radius of 10 times building height to a radius of 25 times the building height. Plan area densities range from 0.0 to 0.50.

[The default in the original COMIS program is 0.0, i.e., an open field. This field is input under the keyword ENV-WIN ("Environment Wind") in the original COMIS program. The default in the original COMIS program is 0.]

Field: Wind Velocity Profile Exponent

This numeric field refers to the power law function used to derive the wind mean velocity profile. Reference values are 0.10 for a level surface with very small obstructions, 0.22 for rolling grassland broken by numerous obstructions such as trees or small houses, and 0.32 for heterogeneous surface with structures larger than one story.

[This field is input under the keyword ENV-WIN ("Environment Wind") in the original COMIS program. The default in the original COMIS program is 0.18.]

Field: Surrounding Building Height

The average eave height of the surrounding buildings. If the Plan Area Density is zero, the Surrounding Building Height should be taken as the height of the building itself.

[This field is input under the keyword ENV-WIN ("Environment Wind") in the original COMIS program. The default in the original COMIS program is 0.]

```
COMIS SITE WIND CONDITIONS,
N1 ,  \field Wind Direction
      \required-field
      \type real
      \note Measured as an angle clockwise from North
      \units degree
N2 ,  \field Plan Area Density
      \required-field
      \units dimensionless
      \type real
N3 ,  \field Exponent of Wind Velocity Profile
      \required-field
      \type real
      \units dimensionless
      \maximum 0.5
      \minimum 0.0
N4;   \field Surrounding Building Height
      \required-field
      \type real
      \units m
      \minimum 0.0
```

IDF Examples:

```
  COMIS SITE WIND CONDITIONS, ! Site conditions for Wind Direction 0 degrees
    0,     ! Wind Direction (degrees clockwise from North)
    0.20,  ! Plan Area Density
    0.18,  ! Exponent of Wind Velocity Profile
    0.0 ;  ! Surround Building Height

  COMIS SITE WIND CONDITIONS, ! Site conditions for Wind Direction 180 degrees
    180,   ! Wind direction (degrees clockwise from North)
    0.20,  ! Plan Area Density
    0.32,  ! Exponent of Wind Velocity Profile
    15.0 ; ! Surrounding Building Height
```

COMIS External Node

External nodes in COMIS define environmental conditions outside of the building. These conditions include wind pressure coefficients that vary from façade to façade and can be highly dependent on the building geometry.

[This field is input under the keyword NET-EX ("External Node Data") in the original COMIS program.]

Field: Name

The External Node Name associated with a particular building façade. This name is referenced by the External Node Name field of a COMIS CP Values object (which gives wind pressure coefficients for the façade as a function of angle of wind incident on the façade) and by the External Node Name field of a COMIS Surface Data object.

Field: Outside Pollutant Concentration Factor

The ratio of outside pollutant concentration at the External Node to the outdoor pollutant concentration data defined elsewhere in the COMIS inputs. Since pollutant transport and

dispersion has not been implemented in the COMIS/EnergyPlus link, a value of 1.0 can be entered.

[The default in the original COMIS inputs is 1.0.]

```
COMIS EXTERNAL NODE,
 A1 , \field Name
      \required-field
      \type alpha
 N1 ; \field Outside Pollutant Concentration Factor
      \required-field
      \units dimensionless
      \type real
```

IDF Example:

```
COMIS EXTERNAL NODE ,
  NorthFacade,          ! Name
  1.0;                  ! Outside Pollutant Concentration Factor
COMIS EXTERNAL NODE ,
  EastFacade,           ! Name
  1.0;                  ! Outside Pollutant Concentration Factor
COMIS EXTERNAL NODE ,
  SouthFacade,          ! External Node Name
  1.0;                  ! Outside Pollutant Concentration Factor
COMIS EXTERNAL NODE ,
  WestFacade,           ! External Node Name
  1.0;                  ! Outside Pollutant Concentration Factor
```

COMIS CP Array

In the COMIS/EnergyPlus implementation, the reference height and wind directions are first specified under the COMIS CP Array object (where “CP” stands for “wind pressure coefficient”). These are then referenced by COMIS CP Value objects defined for each COMIS External Node. Only one COMIS CP Array object should be specified.

[In the original COMIS program the Cp Values are input as a two-dimensional array under the keyword CP-VALU ("Cp Values").]

Field: CP Array Name

The name of this COMIS CP Array object. This name is referenced by each COMIS CP Values object, which, for each COMIS External Node, gives the wind pressure coefficients at each of the wind directions listed in the COMIS CP array. This name is also referenced by the COMIS Simulation Object, indicating that this COMIS CP Array and the pressure coefficients in its associated COMIS CP Values objects will be used in the COMIS/EnergyPlus air flow simulation.

Field: Reference Height for CP data

The building reference height in meters assumed in the Cp values given in the COMIS Cp Value objects. The allowable range is 0+ to 1000m.

[This field is defined under the keyword CP-BUIL ("Cp - building reference height for Cp data") in the original COMIS program. The default in the original COMIS program is 10 m.]

The following fields specify the wind directions--**measured clockwise from North**--that correspond to the Cp values in the COMIS CP Values objects. Wind directions are entered as integer degrees in ascending order between 0 and 360 degrees. The number of non-blank wind directions must match the number of wind directions in each of the COMIS CP Values objects.

Field: Wind Direction #1

The wind direction corresponding to the first Cp value in each of the COMIS Cp Value objects.

[The list of wind direction angles are listed in the first data line of the two-dimensional array defined under the keyword CP-VALU ("Cp Values") in the original COMIS program.]

Field: Wind Direction #2

The wind direction corresponding to the second Cp value in each of the COMIS Cp Value objects.

•

•

•

Field: Wind Direction #N

The wind direction corresponding to the *N* th and last Cp value in each of the COMIS Cp Value objects. *N* can be as high as 36.

```
COMIS CP ARRAY,
 A1, \field CP Array Name
     \reference CPSetNames
     \type alpha
 N1, \field Reference Height for CP Data
     \required-field
     \type real
     \minimum> 0
     \maximum 1000
     \units m
     \note In the following the number of non-blank wind directions must match
     \note the number of wind directions in each of the COMIS CP Values objects.
 N2, \field Wind Direction #1
     \required-field
     \type real
     \units deg
 N3, \field Wind Direction #2
     \type real
     \units deg
--reduced for brevity --
N37; \field Wind direction #36
     \type real
     \units deg
```

IDF Example:

```
COMIS CP ARRAY,
  Every 60 degrees, ! Name of this CP Array
  10.0,             !- Reference Height for CP data (m)
  0,                !- Wind Direction #1 {deg}
  60,               !- Wind Direction #2 {deg}
  120,              !- Wind Direction #3 {deg}
  180,              !- Wind Direction #4 {deg}
  240,              !- Wind Direction #5 {deg}
  300;              !- Wind Direction #6 {deg}
```

COMIS CP Values

This object specifies up to 36 wind pressure coefficients (Cp) of a COMIS External Node for the wind directions defined in the unique COMIS CP Array object. In the air flow calculation, interpolation of the specified Cp values is done for time-step values of wind direction.

[These Cp values and their corresponding COMIS External Node are listed starting with the second data line of the two-dimensional array defined under the keyword CP-VALU ("Cp Values") in the original COMIS program.]

```
COMIS CP VALUES,
      \memo  Cp numeric values must correspond to the wind directions in the COMIS CP Array.
  A1, \field Name of COMIS CP Array
      \type object-list
      \object-list CPSetNames
  A2, \field COMIS External Node Name
      \required-field
      \type alpha
  N1, \field Cp Value #1
      \required-field
      \type real
      \units dimensionless
  N2, \field Cp Value #2
      \type real
      \units dimensionless
--reduced for brevity --
 N36; \field Cp Value #36
      \type real
      \units dimensionless
```

Field: Name of COMIS CP Array

Name of the associated COMIS CP Array, which lists the wind direction corresponding to each Cp value in this COMIS CP Values object.

Field: External Node Name

The name of the COMIS External Node that corresponds to the Cp values given in the following fields.

Field: CP Value #1

The Cp (pressure coefficient) value for building façade indicated by External Node Name for the first wind direction in the COMIS CP Array. Note that Cp values can be positive, negative or zero.

Field: CP Value #2

The Cp (pressure coefficient) value for the building façade indicated by External Node Name for the second wind direction in the COMIS CP Array.

•

•

•

Field: CP Value #N

The Cp (pressure coefficient) value for the building façade indicated by External Node Name for the *N* th and last wind direction in the COMIS CP Array. *N* can be as high as 36.

Obtaining Cp values

Cp values can be obtained from wind tunnel measurements, CFD calculations, or from published values for different building shapes. For buildings with a **rectangular footprint** surface-averaged Cp values vs. wind direction for a facade can be obtained from Table 9 as a function of the length-to-width ratio (L/W) of the footprint and the façade azimuth (see Figure 35). For example, for façade azimuth = 90° and L/W = 4, the Cp value for a 240° wind

direction angle is –0.55. Cp's for façade azimuths, L/W ratios or wind directions different from those given in the table can be obtained by interpolation.

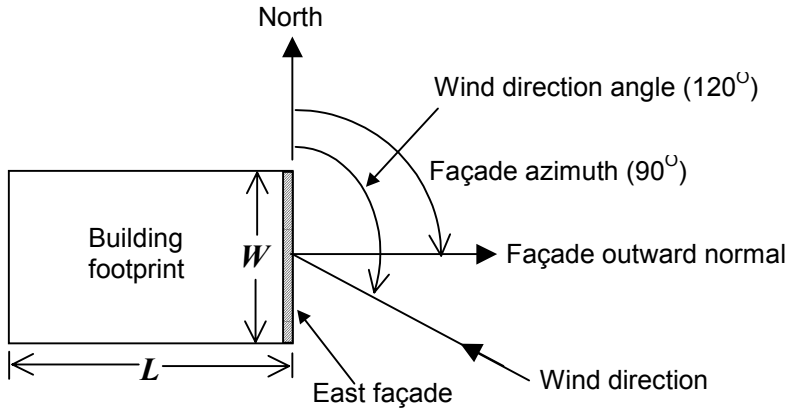

Figure 35. Plan view of a building with a rectangular footprint showing wind-related angles for the east façade. The wind direction angle is measured clockwise from North. The façade azimuth is the angle, measured clockwise, between North and the façade outward normal. The wind incidence angle is the angle, measured clockwise, between the façade outward normal and the wind direction.

Table 9. Cp values for the facades of a building with a rectangular footprint (see Figure 35)*.

Façade Azimuth (deg)				Cp Value		
0	**90**	**180**	**270**	**L / W = 4**	**L / W = 1**	**L / W = 1/4**
Wind Direction Angle (deg)						
0	90	180	270	0.60	0.60	0.60
30	120	210	300	0.54	0.48	0.44
60	150	240	330	0.23	0.04	-0.26
90	180	270	0	-0.25	-0.56	-0.70
120	210	300	30	-0.61	-0.56	-0.53
150	240	330	60	-0.55	-0.42	-0.32
180	270	0	90	-0.51	-0.37	-0.22
210	300	30	120	-0.55	-0.42	-0.32
240	330	60	150	-0.61	-0.56	-0.53
270	0	90	180	-0.25	-0.56	-0.70
300	30	120	210	0.23	0.04	-0.26
330	60	150	240	0.54	0.48	0.44

* This table is based on Figure 7 of Chapter 16, "Airflow Around Buildings," in the 2001 ASHRAE Fundamentals Handbook. The original source for this figure is R.E. Akins, J.A. Peterka and J.E. Cermak. 1979. Averaged pressure coefficients for rectangular buildings, Wind Engineering, Proc. Fifth International Conference 7:369-80, Fort Collins, CO. Pergamon Press, NY.

Cp values for the building's roof (if it is flat and horizontal) are given in Table 10 (see Figure 36).

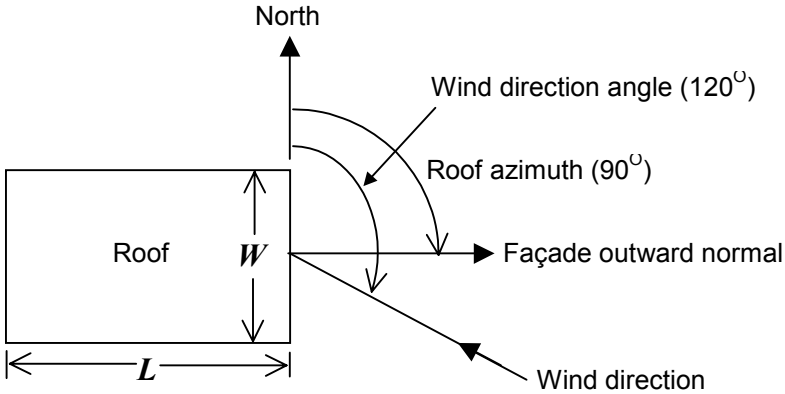

Figure 36. Plan view of a building with a rectangular footprint showing wind-related angles for the roof (assumed flat and horizontal). The wind direction angle is measured clockwise from North. The roof azimuth is the angle, measured clockwise, between North and the outward normal of a façade of width *W*. The wind incidence angle is the angle, measured clockwise, between the façade outward normal and the wind direction.

Table 10. Cp values for the horizontal roof of a building with a rectangular footprint (see Figure 36).*

The following Roof Azimuth values are equivalent: 180° and 0°, 210° and 30°, 240° and 60°, 270° and 90°, 300° and 120°, and 330° and 150°.

Roof Azimuth (deg)						Cp Value		
0	30	60	90	120	150	L / W =1/4	L / W = 1/2	L / W = 1
Wind Direction Angle (deg)								
0	30	60	90	120	150	-0.28	-0.47	-0.70
30	60	90	120	150	180	-0.69	-0.52	-0.55
60	90	120	150	180	210	-0.72	-0.70	-0.55
90	120	150	180	210	240	-0.76	-0.76	-0.70
120	150	180	210	240	270	-0.72	-0.70	-0.55
150	180	210	240	270	300	-0.69	-0.52	-0.55
180	210	240	270	300	330	-0.28	-0.47	-0.70
210	240	270	300	330	0	-0.69	-0.52	-0.55
240	270	300	330	0	30	-0.72	-0.70	-0.55
270	300	330	0	30	60	-0.76	-0.76	-0.70
300	330	0	30	60	90	-0.72	-0.70	-0.55
330	0	30	60	90	120	-0.69	-0.52	-0.55

* This table is based on Figure 9 of Chapter 16, "Airflow Around Buildings," in the 2001 ASHRAE Fundamentals Handbook. The original source for this figure is R.E. Akins, J.A. Peterka and J.E. Cermak. 1979. Averaged pressure coefficients for rectangular buildings, Wind Engineering, Proc. Fifth International Conference 7:369-80, Fort Collins, CO. Pergamon Press, NY.

IDF Example:

Following is sample Cp input for the rectangular building shown in Figure 37. The Cp values have been obtained from Table 9.

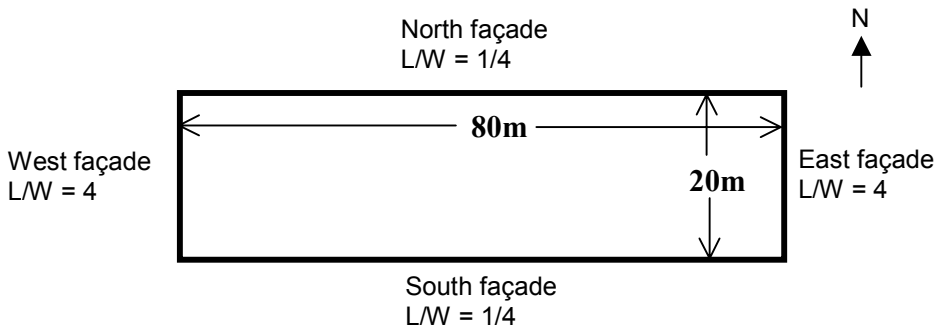

Figure 37. Plan of a building with an 80m x 20m rectangular footprint. In determining wind pressure coefficients, the facades have either L/W = 4 or L/W = 1/4.

```
COMIS EXTERNAL NODE,
  NorthFacade,          ! Name
  1.0;                  ! Outside Pollutant Concentration Factor
COMIS EXTERNAL NODE,
  EastFacade,           ! Name
  1.0;                  ! Outside Pollutant Concentration Factor
COMIS EXTERNAL NODE,
  SouthFacade,          ! External Node Name
  1.0;                  ! Outside Pollutant Concentration Factor
COMIS EXTERNAL NODE,
  WestFacade,           ! External Node Name
  1.0;                  ! Outside Pollutant Concentration Factor
COMIS Cp ARRAY,
  Every 30 Degrees      ! Name
  10.0,                 ! Reference Height for Cp Values (m)
      0,   30,   60,   90,  120,  150,  180,  210,  240,  270,  300,  330;  ! Wind directions
COMIS Cp VALUES,
  Every 30 Degrees,     ! Cp Array name
  NorthFacade,          ! External node name; this façade has azimuth = 0 deg and L/W = 1/4
   0.60, 0.44,-0.26,-0.70,-0.53,-0.32,-0.22,-0.32,-0.53,-0.70,-0.26, 0.44; Cp values vs. wind dir.
COMIS Cp VALUES,
  Every 30 Degrees,     ! Cp Array name
  EastFacade,           ! External node name; this façade has azimuth = 90 deg and L/W = 4
  -0.25, 0.23, 0.54, 0.60, 0.54, 0.23,-0.25,-0.61,-0.55,-0.51,-0.55,-0.61; Cp values vs. wind dir.
COMIS Cp VALUES,
  Every 30 Degrees,     ! Cp Array name
  SouthFacade,          ! External node name; this façade has azimuth = 180 deg and L/W = 1/4
  -0.22,-0.32,-0.53,-0.70,-0.26, 0.44, 0.60, 0.44,-0.26,-0.70,-0.53,-0.32; Cp values vs. wind dir.
COMIS Cp VALUES,
  Every 30 Degrees,     ! Cp Array name
  WestFacade,           ! External node name; this façade has azimuth = 270 deg and L/W = 4
  -0.25,-0.61,-0.55,-0.51,-0.55,-0.61,-0.25, 0.23, 0.54, 0.60, 0.54, 0.23; Cp values vs. wind dir.
```

COMIS Standard Conditions for Crack Data

This input is used to normalize measured crack data for the temperature, pressure, and humidity under which the data were collected. If the crack characteristics are based on

estimated engineering values and not actual measured data, the default values indicated below should be entered.

[The following fields are input under the keyword NORMCR ("Standard Conditions for Crack Data") in the original COMIS program.]

Field: Standard Temperature for Crack Data

The standard temperature in ^{O}C under which the Crack Data were obtained.

[The default for this field in the original COMIS program is 20C.]

Field: Standard Barometric Pressure for Crack Data

The standard barometric pressure in kPa under which the Crack Data were obtained.

[The default for this field in the original COMIS program is standard atmospheric pressure, 101.325 kPa.]

Field: Standard Humidity Ratio for Crack Data

The standard humidity ratio in g/kg under which the Crack Data were obtained.

[The default for this field in the original COMIS program is 0 g/kg.]

```
COMIS STANDARD CONDITIONS FOR CRACK DATA,
      \unique-object
N1 ,  \field Standard Temperature for Crack Data
      \required-field
      \type real
      \units C
N2 ,  \field Standard Barometric Pressure for Crack Data
      \required-field
      \type real
      \units kPa
N3 ;  \field Standard Humidity Ratio for Crack Data
      \required-field
      \type real
      \units g/kg
```

IDF Example:

```
COMIS STANDARD CONDITIONS FOR CRACK DATA,
  20,             ! Standard Temperature for Crack Data (C)
  101.32,         ! Standard Barometric Pressure for Crack Data
  5;              ! Standard Humidity Ratio for Crack Data (g/kg)
```

The COMIS Input File

At the beginning of the simulation EnergyPlus generates an internal COMIS input file, **eplusout.cif**, based on the COMIS-related inputs described above. To retain this file, add the following line to your idf file:

```
Report, COMISinput;
```

eplusout.cif can be used as a summary and verification of your COMIS/EnergyPlus inputs. It can also be used as input to the original COMIS program for testing and debugging purposes. If EP-Launch is used or the batch files are used to run the EnergyPlus simulation, then this file will be saved as **<filename>.cif**.

An example of this file is shown in Figure 38. This is followed by a description of the contents of the file.

```
1  &-PR-IDENtification                1
2  EnergyPlus/COMIS input file
3  &-PR-SIMUlation options            2
4  VENT
```

```
5  NO POL
6  NO CONC
7  NO INPUT
8  NO DEFAULT
9  NO UNIT
10 START   19570701_00:00
11 STOP    19570701_00:00
12 &-PR-CONTrol parameters            3
13 1.     0.1E-05     0.1E-03     0.2E-06  1     0.1E-03
14         1         0       500
15 &-CR       CRACK                   7
16 *CR-1
17      0.010     0.667     1.000
18      0.000     0.000     0.000
19 *CRCRI
20      0.050     0.667     1.000
21      0.000     0.000     0.000
22 &-WI       WINDOW                  8
23 *WIWIOPEN1_1
24      0.001     0.667         1     4.000     1.500     0.000
25      0.000     0.500     0.000     1.000     0.000
26      1.000     0.600     1.000     1.000     0.000
27      0.000     0.000     0.000     0.000     0.000
28 *WIWIOPEN2_1
29      0.001     0.667         1     3.000     1.333     0.000
30      0.000     0.500     0.000     1.000     0.000
31      1.000     0.600     1.000     1.000     0.000
32      0.000     0.000     0.000     0.000     0.000
33 *WIDROPEN_1
34      0.001     0.667         1     1.000     2.000     0.000
35      0.000     0.500     0.000     1.000     0.000
36      1.000     0.600     1.000     1.000     0.000
37      0.000     0.000     0.000     0.000     0.000
38 &-NET-ZONes                        9
39 Z1    WEST_ZONE                          23.00      0.00    113.27      0.01
40 Z2    EAST_ZONE                          23.00      0.00    113.27      0.01
41 Z3    NORTH_ZONE                         23.00      0.00    226.53      0.01
42 &-NET-EXTernal node data          10
43 ex1    fac1          1.00
44 ex2    fac2          1.00
45 ex3    fac3          1.00
46 ex4    fac4          1.00
47 &-NET-LINks                       11
48 SURFACE_1            CR-1            -ex3    Z1       1.524  1.524  1.00  1.000
49 WINDOW1              WIWIOPEN1_1     -ex3    Z1       1.750  1.750  1.00  0.500
50 SURFACE_2            CR-1            -ex4    Z1       1.524  1.524  1.00  1.000
51 SURFACE_3            CRCRI           Z3      Z1       1.524  1.524  1.00  1.000
52 DOORINSURFACE_3      WIDROPEN_1      Z3      Z1       1.000  1.000  1.00  0.500
53 SURFACE_4            CRCRI           Z2      Z1       1.524  1.524  1.00  1.000
54 SURFACE_8            CR-1            -ex3    Z2       1.524  1.524  1.00  1.000
55 SURFACE_9            CR-1            -ex2    Z2       1.524  1.524  1.00  1.000
56 SURFACE_11           CRCRI           Z3      Z2       1.524  1.524  1.00  1.000
57 SURFACE_14           CR-1            -ex4    Z3       1.524  1.524  1.00  1.000
58 SURFACE_15           CR-1            -ex1    Z3       1.524  1.524  1.00  1.000
59 WINDOW2              WIWIOPEN2_1     -ex1    Z3       1.667  1.667  1.00  0.500
60 SURFACE_16           CR-1            -ex2    Z3       1.524  1.524  1.00  1.000
61 &-CP-BUILding reference height for Cp data 12
62   10.00000
63 &-CP-VALUes                       13
64 cpva
65 * 0.00 30.0  60.0  90.0 120.0 150.0 180.0 210.0 240.0 270.0 300.0 330.0
66 fac1 0.60 0.48 0.04 -0.56 -0.56 -0.42 -0.37 -0.42 -0.56 -0.56 0.04 0.48
67 fac2 -0.56 0.04 0.48 0.60 0.48 0.04 -0.56 -0.56 -0.42 -0.37 -0.42 -0.56
68 fac3 -0.37 -0.42 -0.56 -0.56 0.04 0.48 0.60 0.48 0.04 -0.56 -0.56 -0.42
69 fac4 -0.56 -0.56 -0.42 -0.37 -0.42 -0.56 -0.56 0.04 0.48 0.60 0.48 0.04
70 &-ENV-BUIlding related parameters  4
71    228.000     0.000    40.300   -88.150
72 &-ENV-WINd and meteo related parameters  5
73     10.000   228.000     0.140
74      0.000     0.200     0.180     0.000
```

```
75    180.000     0.200     0.320    15.000
76 &-SCH-METeo data                   6
77 met data for time step
78 19570701_00:00   0.0    0.  18.2 11.7  98.79
79 &-NORM-CR Standard conditions for crack data
80   20.00000       101.3200       5.000000
```

Figure 38. Sample COMIS input file, eplusout.cif, produced by COMIS/EnergyPlus. This sample differs from the actual file in that reference line numbers have been added and blank space in some of the lines has been removed to avoid line wrapping. For what's in this file, see "Description of Contents of Sample COMIS Input File."

Description of Contents of Sample COMIS Input File

An example COMIS input file is shown in Figure 38. The following describes the contents of the lines in this file. When the contents are associated with a COMIS input object the name of the object is given in boldface; this is followed by the names of one or more input fields associated with that object. For example, Line 4 of the sample file contains the value of the "Ventilation Simulation Control" field of the COMIS Simulation object.

Line 4: **COMIS Simulation**: Ventilation Simulation Control.

Line 5: **COMIS Simulation**: Pollution Simulation Control.

Line 6: **COMIS Simulation**: Concentration Simulation Control.

Line 13-14: **COMIS Simulation**

Line 13: Under-Relaxation Factor, Absolute Flow Tolerance (kg/s), Relative Flow Tolerance, Error Estimate for Total Flow per Zone (kg/s), Start Number of Iterations, Limit for Laminar Flow Approximation (Pa).

Line 14: Flag for Using Old Pressures (1 = use pressures from previous time step at start of iterations in current time step), Flag for Pressure Initiation (0 = do linearized solution at beginning of iterations), Maximum Number of Iterations.

Lines 16-18 and 19-21: **COMIS Air Flow:Crack**: Name, Air Mass Flow Coefficient (kg/s @ 1.0 Pa), Air Mass Flow Exponent, Crack Length (m), Pollutant #1, #2 and #3 Filter Efficiencies.

Lines 23-27: **COMIS Air Flow:Opening**: input data for WIOPEN1.

Line 23: Name. Note that program has added prefix "WI" and suffix "_1". If two or more COMIS Surface Data's refer to the same COMIS Air Flow:Opening then multiple air-flow opening blocks will be created, with suffices "_1", "_2", etc.

Line 24: Air Mass Flow Coefficient When Window or Door is Closed (kg/s @ 1.0 Pa per m of crack); Air Mass Flow Exponent When Window or Door is Closed; Type of Large Vertical Opening (LVO); width of window/door (m); height of window/door (m); Extra Crack length for LVO Type 1 with Multiple Openable Parts, or Height of Pivoting Axis for LVO type 2.

Line 25: Opening Factor #1, Discharge Coefficient for Opening Factor #1, Width Factor for Opening Factor #1, Height Factor for Opening Factor #1, Start Height Factor for Opening Factor #1.

Line 26: Opening Factor #2, …

Line 27: Opening Factor #3, … (note: data for only two opening factors has been specified)

Lines 28-32: **COMIS Air Flow:Opening**: input data for WIOPEN2.

Lines 33-37: **COMIS Air Flow:Opening**: input data for DROPEN.

Lines 39-41: **COMIS Zone Data**: COMIS zone name in the form zN, where N = zone number of associated thermal zone; Name of Associated Thermal Zone; starting zone air temperature (C); calculated reference height (m); volume (m^3); starting value of zone air humidity ratio.

Lines 43-46: **COMIS External Node**: external node number in the form exN, façade element number in the form facN, Outside Pollutant Concentration Factor (not used).

Lines 48-60: **COMIS Surface Data**--information for the air flow links, where a link can be a crack or window/door opening. Each line gives:

- Name of the heat transfer surface associated with the link.
- Name of the COMIS Air Flow:Crack or COMIS Air Flow:Opening corresponding to the link. Opening names start with WI. Other names are crack names.
- COMIS name of the link's FromZone. In COMIS, air flows across a link between two zones, one of which is the "FromZone" and the other is the "ToZone." A name of the form –exN means external air node N. See "FromZone's and ToZone's," below.
- COMIS name of the link's ToZone. A name of the form –exN means external air node N. In COMIS, air flows across a link between two zones, one of which is the "FromZone" and the other is the "ToZone." A name of the form –exN means external node N. See "FromZone's and ToZone's," below.
- Vertical distance between link and FromZone's reference plane (m)
- Vertical distance between link and ToZone's reference plane (m)
- For a window/door opening, the cosine of the angle between the plane of the opening and the vertical plane (same as sine of the window/door tilt angle).

Lines 62: **COMIS Simulation**: Reference Height for Recorded Wind Data (m)

Lines 65-69: **COMIS CP Values**

Line 65: Wind directions (degrees from North)

Lines 66-69: Façade element number in the form facN, Cp values for corresponding wind directions.

Line 71: Building parameters: height above sea level (m), azimuth (deg), latitude (deg), longitude (deg).

Lines 73-75: Wind and meteorological parameters

Line 73: Reference height for wind speed measurement (m), altitude of meteorological station (m), exponent in the power-law function of the wind velocity profile.

Lines 74-75: **COMIS Site Wind Conditions**: Wind direction (deg from North), Plan Area Density, Exponent of Wind Velocity Profile, Surrounding Building Height (m).

Line 78: Weather data for first time step: Year/month/day/hour/minutes of first time step, wind speed (m/s), wind direction (deg from North), outside drybulb temperature (C), outside humidity ratio (g/kg), barometric pressure (kPa).

Line 80: **COMIS Standard Conditions for Crack Data**: Standard Temperature for Crack Data (C), Standard Barometric Pressure for Crack Data (kPa), Standard Humidity Ratio for Crack Data (g/kg).

EnergyPlus/COMIS Output Variables

```
Zone,Sum,Infiltration-Volume[m3]
Zone,Sum,Infiltration-Air Change Rate[ach]
Zone,Sum,Infiltration-Mass[kg]
Zone,Sum,Infiltration-Heat Loss[J]
Zone,Sum,Infiltration-Heat Gain[J]
Zone,Sum,Mixing-Volume[m3]
Zone,Sum,Mixing-Mass[kg]
Zone,Sum,Inside Temp Setpoint for COMIS Venting[C]
Zone,Sum,Opening Factor Multiplier for COMIS Venting Modulation[]
Zone,Average,Window/Door Venting Opening Factor[]
Zone,Average,Wind pressure[Pa]
Zone,Average,Air Flow from FromZone to ToZone through COMIS Link[m3/s]
Zone,Average,Air Flow from ToZone to FromZone through COMIS Link[m3/s]
Zone,Average,Number of COMIS Iterations
```

Building-Level Output Variable

Number of COMIS Iterations

The number of iterations used by the COMIS solver each time step to determine the air flows through all of the links in the airflow network. You can set the maximum number of iterations allowed (ref: COMIS Simulation, Field: Maximum Number of Iterations).

Zone-Level Output Variables

Infiltration-Volume [m3]

The volume of outside air flow into the zone from window/door openings and cracks in the exterior surfaces of the zone. I.e., it is the sum of ventilative and crack flows from the exterior into the zone. Note that Infiltration-Volume will be zero if all of the flows through the zone's exterior surfaces are out of the zone.

Infiltration-Air Change Rate [ach]

The number of air changes per hour produced by outside air flow into the zone from window/door openings and cracks in the exterior surfaces of the zone. I.e., it is the sum of ventilative and crack flows from the exterior into the zone. Note that, like Infiltration-Volume, Infiltration-Air Change Rate will be zero if all of the flows through the zone's exterior surfaces are out of the zone.

Infiltration-Mass [kg]

The mass of air corresponding to Infiltration-Volume.

Infiltration-Heat Loss [J]

The convective heat loss from the zone air corresponding to Infiltration-Volume.

Infiltration-Heat Gain [J]

The convective heat gain to the zone air corresponding to Infiltration-Volume.

Mixing-Volume [m3]

This is a measure of interzone air flow for each thermal zone. It is the volume of air flow into the zone from adjacent zones through window/door openings and cracks in the interior heat transfer surfaces of the zone. This variable does not include flows that are from the zone to adjacent zones. Note that Mixing-Volume will be zero if all the air flows through the zone's interior surfaces are out of the zone.

Mixing-Mass [kg]

The mass of air corresponding to Mixing-Volume.

Inside Temp Setpoint for COMIS Venting [C]

The time-step value of the zone's venting set point as determined from the zone's Vent Temperature Schedule (ref: COMIS Zone Data).

Opening Factor Multiplier for COMIS Venting Modulation []

This is the multiplier on the window/door opening factors in a thermal zone when venting modulation is in effect. See "Modulation of Openings" under COMIS Zone Data for a description of how the multiplier is determined.

When modulation is in effect the value of the multiplier is between 0.0 and 1.0. When modulation does not apply to a zone the value of the multiplier may be –1.0 or –2.0. When modulation applies to a zone but the zone is not venting, the value is –1.0. This is summarized in the following table. In this table, "COMIS zone" means a thermal zone for which COMIS Zone Data has been specified. See COMIS Zone Data for definition of "Ventilation Control Mode."

Table 11. Value of opening factor multiplier for different venting conditions.

Is zone a COMIS zone?	**Ventilation Control Mode**	**Is zone venting?**	**Value of opening factor multiplier**
Yes	TEMPERATURE	Yes	0.0 to 1.0
		No	-1.0
	ENTHALPIC	Yes	0.0 to 1.0
		No	-1.0
	CONSTANT	Yes	1.0
	NOVENT	No	-1.0
No	Does not apply	No	-2.0

<u>Surface-Level Output Variables</u>

Wind Pressure [Pa]

The surface-averaged wind pressure on the outside of an exterior heat transfer surface that is referenced by a COMIS Surface Data object. The wind pressure depends on several factors, including wind speed, wind direction, the wind-pressure coefficient (Cp) values for the COMIS External Node associated with the heat transfer surface, and the site wind conditions such as Plan Area Density and Surrounding Building Height.

Air Flow from FromZone to ToZone through COMIS Link [m3/s]

The air flow through a COMIS link (a crack or window/door opening) from the link's FromZone to the link's ToZone. The following input will cause reporting of the FromZone to ToZone air flow through heat transfer surface Window1, which is an openable exterior window in 3zvent.idf:

```
Report Variable,Window1,Air Flow from FromZone to ToZone through COMIS Link,timestep;
```

FromZone's and ToZone's

In COMIS, air flows through a link between two zones, one of which is the "FromZone" and the other is the "ToZone." The FromZone and the ToZone may both be thermal zones or one of them may be an exterior air node.

The FromZone and ToZone for a link can be determined by looking at the eplusout.eio file in the <COMIS Air-Flow Link Data> section, or at the COMIS input file, eplusout.cif, both of which are produced by EnergyPlus.

The following shows an excerpt from the eplusout.eio file that gives the FromZone's and ToZone's for the links in the 3zvent.idf example input. (This input has three thermal zones, WEST_ZONE, EAST_ZONE and NORTH_ZONE.) For example, the FromZone for SURFACE_4 is EAST_ZONE and the ToZone is WEST_ZONE. Note that a FromZoneName or ToZoneName of the form "-exN" means that the "zone" is actually exterior air node number N. For example, the FromZone for WINDOW1 is exterior air node number 3 and the ToZone is WEST_ZONE.

```
! <COMIS Air-Flow Link Data>,Surface Name,Surface Class,Air-Flow Data Name,FromZoneName,ToZoneName
 SURFACE_1,WALL,CR-1,-ex3,WEST_ZONE
 WINDOW1,WINDOW,WIWIOPEN1_1,-ex3,WEST_ZONE
 SURFACE_2,WALL,CR-1,-ex4,WEST_ZONE
 SURFACE_3,WALL,CRCRI,NORTH_ZONE,WEST_ZONE
 DOORINSURFACE_3,DOOR,WIDROPEN_1,NORTH_ZONE,WEST_ZONE
 SURFACE_4,WALL,CRCRI,EAST_ZONE,WEST_ZONE
 SURFACE_7,WALL,CR-1,-ex5,EAST_ZONE
 SURFACE_8,WALL,CR-1,-ex3,EAST_ZONE
 SURFACE_9,WALL,CR-1,-ex2,EAST_ZONE
 SURFACE_11,WALL,CRCRI,NORTH_ZONE,EAST_ZONE
 SURFACE_14,WALL,CR-1,-ex4,NORTH_ZONE
 SURFACE_15,WALL,CR-1,-ex1,NORTH_ZONE
 WINDOW2,WINDOW,WIWIOPEN2_1,-ex1,NORTH_ZONE
 SURFACE_16,WALL,CR-1,-ex5,NORTH_ZONE
```

For an example of FromZone and ToZone designtations in eplusout.cif, see lines 49 to 62 of the sample COMIS input file in Figure 38 and "Description of Contents of Sample COMIS Input File."

Air Flow from ToZone to FromZone through COMIS Link [m3/s]

The air flow through a COMIS link (a crack or window/door opening) from the link's ToZone to the link's FromZone. For a definition of ToZone and FromZone, see discussion, above, under "Air Flow from FromZone to ToZone through COMIS Link."

The following input will cause reporting of the ToZone to FromZone air flow through heat transfer surface Window1, which is an openable exterior window in 3zvent.idf:

```
Report Variable,Window1,Air Flow from ToZone to FromZone through COMIS Link,timestep;
```

Note that if you report any link air flows at all you should report the FromZone to ToZone <u>and</u> the ToZone to FromZone flows. There are two reasons for this:

1. For cracks, air can flow in only one direction in a given time step, either from FromZone to ToZone or from ToZone to FromZone. If the FromZone to ToZone flow is positive the ToZone to FromZone flow will be zero, and vice-versa. Therefore both of these flows must be reported to see how the size and direction of flow vary from time step to time step.

2. For openable windows or doors, there are <u>three</u> possible air flow configurations in a given time step: (a) FromZone to ToZone only, (b) ToZone to FromZone only, and (c) FromZone to ToZone <u>and</u> ToZone to From Zone at the same time. The last of these is

called “bidirectional flow.” As for cracks, both flows must be reported to see exactly what is happening.

Window/Door Venting Opening Factor []

The current time-step value of the venting opening factor for a particular window or door. When the window or door is venting, this is the input value of the opening factor (see COMIS Surface Data, Window/Door Opening Factor) times the multiplier for venting modulation (see description of previous output variable, “Opening Factor Multiplier for COMIS Venting Modulation”). For example, if the input Window/Door opening factor is 0.5 and the modulation multiplier is 0.7, then the value of this output variable will be 0.5x0.7 = 0.35.

Group – Design Objects

Input for Design Calculations and Component Autosizing

Overview

In order for EnergyPlus to successfully calculate zone design heating and cooling loads and air flow rates and for the program to use these results to automatically size the HVAC components a number of input objects must be present and certain object input fields must be entered.

- The input file should contain a RUN CONTROL object. The 1st field *Do the zone sizing calculation* should be entered as *Yes*. This will cause a zone sizing simulation to be done using all the design days in the input file as weather. If there are no air or water loops in the HVAC input fields 2 and 3 can be set to *No.* If there are one or more air loops (i.e., there is at least one Air Primary Loop object in the input file) then the 2nd field *Do the system sizing calculation* should be entered as *Yes*. If there are one or more water loops (Plant Loop objects) then the 3rd field *Do the plant sizing calculation* should be set to *Yes*. Finally either the 4th field (*Do the design day simulations*) or the 5th field (*Do the weather file simulation*) should be set to *Yes* in order to autosize the components and do a real simulation. The component autosizing calculations are done on the first pass through the HVAC system in the real simulation.
- There must be at least 2 (up to any number) DesignDay objects present. Normally one will be for summer conditions and one for winter. The summer day should normally have the field *Day Type* set to *SummerDesignDay*. The winter design day should normally have *Day Type* set to *WinterDesignDay*.
- To apply a global sizing factor include the SIZING PARAMETERS object.
- For each controlled zone in the input file there should be a corresponding ZONE SIZING object. Similarly for each Air Primary Loop there should be a SYSTEM SIZING object. And for each Plant or Condenser Loop there should be a PLANT SIZING object. Note however that if a controlled zone has no corresponding Zone Sizing object the data from the first Zone Sizing object will be used. Thus if all the zone sizing information is the same only one Zone Sizing object need be entered.
- Only controlled zones are included in the zone and system sizing calculations. Thus for a design air flow rate to be calculated for a zone, it must contain a thermostat *even though it might not need or have a thermostat in the full simulation*. An illustration would be a three zone building with a packaged single zone system and a thermostat in one of the zones. In order for the two slave zones to be included in the design air flow calculations they must be treated as if they have a thermostat: there must be a ZONE CONTROL:THERMOSTATIC for each of the slave zones.

- Some attention should be paid to schedules. In the WEEKSCHEDULE object the 9th and 10th day schedules are for summer and winter design days respectively. This means that if a DesignDay object has field *Day Type* set to *SummerDesignDay* the day schedule for summer design days will be in effect. Similarly if a DesignDay object has field *Day Type* set to *WinterDesignDay* the day schedule for winter design days will be in effect. Some possible applications of this capability are:

7) setting internal loads (lights, equipment, occupancy) to maximum all day for cooling and to zero all day for heating;

8) setting heating and cooling thermostat set points to constant values (no set up or set back);

9) setting heating and cooling equipment to be always on.

None of these applications are necessarily recommended but these and other uses of the special design day schedules may prove useful for specific situations.

Component Autosizing

For autosizing to occur at the component level the user must enter the special value *autosize* in the numeric fields for which autosizing is available. Those fields can be found by looking at the Energy+.idd data dictionary file. Fields that can be autosized are denoted with the comment *autosizable*. For convenience we list here the components and fields that are autosizable.

Table 12. Details of Autosizable Objects/Fields

Component or Object	**Field**
SYSTEM SIZING	Design (minimum) outside air volumetric flow rate
BRANCH	Maximum Branch Flow Rate
PLANT LOOP	Maximum Loop Volumetric Flow Rate
	Volume of the Plant Loop
CONDENSER LOOP	Maximum Loop Volumetric Flow Rate
	Volume of the Condenser Loop
AIR PRIMARY LOOP	Primary air design volumetric flow rate
CONTROLLER:SIMPLE	Max Actuated Flow
CONTROLLER:OUTSIDE AIR	minimum outside air flow rate
	maximum outside air flow rate
DIRECT AIR	Maximum air flow rate
FAN COIL UNIT:4 PIPE	maximum air flow rate
	maximum outside air flow rate
	maximum cold water flow
	maximum hot water flow
AIR CONDITIONER:WINDOW:CYCLING	maximum air flow rate
	maximum outside air flow rate
UNIT VENTILATOR	maximum air flow rate

	maximum outside air flow rate
	minimum outside air flow rate
	maximum hot water flow
	maximum cold water flow
UNIT HEATER	maximum air flow rate
	maximum hot water flow
FURNACE:BLOWTHRU:HEATONLY	Furnace heating capacity
	Maximum supply air temperature from furnace heater
	Design air flow rate through the furnace
	Fraction of the total or design volume flow that goes through the controlling zone
FURNACE:BLOWTHRU:HEATCOOL	Furnace heating capacity
	Maximum supply air temperature from furnace heater
	Design air flow rate through the furnace
	Fraction of the total or design volume flow that goes through the controlling zone
UNITARYSYSTEM:BLOWTHRU:HEATONLY	Unitary system heating capacity
	Maximum supply air temperature from unitary system heater
	Design air flow rate through the unitary system
	Fraction of the total or design volume flow that goes through the controlling zone
UNITARYSYSTEM:BLOWTHRU:HEATCOOL	Unitary system heating capacity
	Maximum supply air temperature from unitary system heater
	Design air flow rate through the unitary system
	Fraction of the total or design volume flow that goes through the controlling zone
UNITARYSYSTEM:HEATPUMP:AIRTOAIR,	Design air flow rate through the heat pump
	Fraction of the total volume flow that goes through the controlling zone
	Heating coil capacity
	Cooling coil capacity
	Supplemental heating coil capacity
	Maximum supply air temperature from heat pump supplemental heater
DUAL DUCT:CONST VOLUME	Max Air Flow Rate
DUAL DUCT:VAV	Max Damper Air Flow Rate

SINGLE DUCT:CONST VOLUME:REHEAT	Maximum air flow rate
	Max Reheat Water Flow
SINGLE DUCT:VAV:REHEAT	Maximum air flow rate
	Max Reheat Water Flow
SINGLE DUCT:SERIES PIU:REHEAT	maximum total air volume flow rate
	maximum primary air volume flow rate
	minimum primary air flow fraction
	Max Reheat Water Flow
SINGLE DUCT:PARALLEL PIU:REHEAT	maximum primary air volume flow rate
	maximum secondary air volume flow rate
	minimum primary air flow fraction
	fan on flow fraction
	Max Reheat Water Flow
BASEBOARD HEATER:Water:Convective	UA
	Max Water Flow Rate
BASEBOARD HEATER:ELECTRIC:Convective	Nominal Capacity of the BaseBoard
HIGH TEMP RADIANT SYSTEM	maximum power input
LOW TEMP RADIANT SYSTEM:HYDRONIC	Hydronic tubing length (total length of pipe embedded in surface)
	maximum hot water flow
	maximum cold water flow
LOW TEMP RADIANT SYSTEM:ELECTRIC	maximum electrical power to panel
BOILER:SIMPLE	Nominal Capacity
	Max Design Boiler Water Flow Rate
CHILLER:ELECTRIC	Nominal Capacity
	Design Evaporator Volumetric Water Flow Rate
	Condenser Volumetric Water Flow Rate
PUMP:VARIABLE SPEED	Rated Volumetric Flow Rate
	Rated Power Consumption
PUMP:CONSTANT SPEED	Rated Volumetric Flow Rate
	Rated Power Consumption
COOLING TOWER:SINGLE SPEED	Design Water Flow Rate
	Design Air Flow Rate
	Fan Power at Design Air Flow Rate
	Tower UA value at Design Air Flow Rate
COOLING TOWER:TWO SPEED	Design Water Flow Rate

	Air Flow Rate at High Fan Speed
	Fan Power at High Fan Speed
	Tower UA value at High Fan Speed
	Air Flow Rate at Low Fan Speed
	Fan Power at Low Fan Speed
	Tower UA value at Low Fan Speed
COIL:Water:SimpleCooling	UA of the Coil
	Max Water Flow Rate of Coil
COIL:Water:SimpleHeating	UA of the Coil
	Max Water Flow Rate of Coil
COIL:Electric:Heating	Nominal Capacity of the Coil
COIL:Gas:Heating	Nominal Capacity of the Coil
COIL:DX:CoolingBypassFactorEmpirical	Rated Total Cooling Capacity (gross)
	Rated SHR
	Rated Air Volume Flow Rate
COIL:DX:HeatingEmpirical	Rated Total Heating Capacity
	Rated Air Volume Flow Rate
	Resistive Defrost Heater Capacity
FAN:SIMPLE:ConstVolume	Max Flow Rate
FAN:SIMPLE:VariableVolume	Max Flow Rate
	Min Flow Rate
FAN:SIMPLE:ONOFF	Max Flow Rate

Each component is autosized independently. Thus user input for a flow rate in one component will have no effect on other components autosized flow rates. This can easily result in mismatched input.

Thus it is best to either autosize all components or none. Within a component however individual fields can be autosized or specified by hand. The by hand specified inputs will be used in autosizing the others.

Component Sizing Output

The results of the component autosizing calculations are reported on the *eplusout.eio* file. For each component field that has been autosized the object type, object name, field description with unit, and value are printed out as comma separated data on a line beginning with *Component Sizing*.

User or External Zone Design Flow Rate Inputs

In EnergyPlus the autosizing calculations start with a calculation of the zone design air flow rates using zone by zone design day simulations. The resulting zone design air flow rates and daily air flow sequences are used in the subsequent HVAC and central plant air and fluid

flow design calculations and in the component autosizing calculations. The user can override or change the calculated zone design air flow rates in several ways.

10) The user can enter a value for *sizing factor* in the *Sizing Parameters* object (see description below).

11) The user can specify a zone level *zone sizing factor* in each *Zone Sizing* object.

12) For each zone the user can input a *cooling design air flow rate* and/or a *heating design air flow rate* (and specify *cooling design air flow method = flow/zone* and *heating design air flow method = flow/zone*). These user inputs override the calculated values. The program divides the user input cooling or heating design air flow rate by the calculated values and uses the result as a zone sizing factor to multiply all the elements in the design heating and cooling air flow and load sequences. From this point the design calculations proceed as usual.

Sizing Parameters

This object allows the user to specify a global sizing ratio. This ratio will be applied at the zone level to all of the zone heating and cooling loads and air flow rates. These new loads and air flow rates are then used to calculate the system level flow rates and capacities and are used in all of the component sizing calculations.

Field: sizing factor

The global sizing ratio applied to all of the zone design load and air flow rates.

Sizing Parameters Outputs

The sizing factor is reported out on the *eplusout.eio* file. An example is:

```
! <Sizing Factor Information>, Sizing Factor ID, Value
 Sizing Factor, Global,   1.2000
 Sizing Factor, Zone SPACE1-1,   1.2000
 Sizing Factor, Zone SPACE2-1,   1.4500
 Sizing Factor, Zone SPACE3-1,   1.2000
 Sizing Factor, Zone SPACE4-1,   1.2000
 Sizing Factor, Zone SPACE5-1,   1.2000
```

Zone Sizing

The Zone Sizing object provides the data needed to perform a zone design air flow calculation for a single zone. This calculation assumes a variable amount of supply air at a fixed temperature and humidity. The information needed consists of the zone inlet supply air conditions: temperature and humidity ratio for heating and cooling. The calculation is done for every design day included in the input. The maximum cooling load and air flow and the maximum heating load and air flow are then saved for the system level design calculations and for the component automatic sizing calculations.

The Zone Sizing object is also the place where the user can input the design outside air flow rate. This can be specified as either an air flow per person or an overall zone air flow. This data is saved for use in the system sizing calculation of for sizing zone components that use outside air.

Field: Name of a zone

The name of the Zone corresponding to this Zone Sizing object. This is the zone for which the design air flow calculation will be made using the input data of this Zone Sizing Object.

Field: Zone cooling design supply air temperature

The supply air temperature in degrees Celsius for the zone cooling design air flow rate calculation. Air is supplied to the zone at this temperature during the cooling design day simulation, The zone load is met by varying the zone air flow rate. The maximum zone flow rate is saved as the zone cooling design air flow rate.

Field: Zone heating design supply air temperature

The supply air temperature in degrees Celsius for the zone heating design air flow rate calculation. Air is supplied to the zone at this temperature during the heating design day simulation, The zone load is met by varying the zone air flow rate. The maximum zone flow rate is saved as the zone heating design air flow rate.

Field: Zone cooling design supply air humidity ratio

The humidity ratio in kilograms of water per kilogram of dry air of the supply air in the zone cooling design air flow rate calculation.

Field: Zone heating design supply air humidity ratio

The humidity ratio in kilograms of water per kilogram of dry air of the supply air in the zone heating design air flow rate calculation.

Field: Outside air method

The input must be either *flow/person* or *flow/zone*. *Flow/person* means the program will use the input from the field *outside air flow per person* and the maximum occupancy to calculate a zone design outside air flow rate. *Flow/zone* means that the program will use the input of the field *outside air flow* as the zone design outside air flow rate. The default is *flow/person*.

Field: Outside air flow per person

The design outside air flow rate per person for this zone in cubic meters per second. The default is 0.00944 (20 cfm per person).

Field: Outside air flow

The design outside air flow rate for this zone in cubic meters per second. This is an alternative to the previous input field.

Field: Zone sizing factor

This input is a zone level sizing ratio. The zone design heating and cooling air flow rates and loads will be multiplied by the number input in this field. This input overrides the building level sizing factor input in the Sizing Parameters object.

Field: Cooling design air flow method

The input must be either *design day* or *flow/zone*. *Design day* means the program will calculate the zone design cooling air flow rate using the Zone Sizing input data and a design day simulation. *Flow/zone* means that the program will use the input of the field *cooling design air flow rate* as the zone design cooling air flow rate. The default method is *design day*: i.e., the program uses the calculated design values.

Field: Cooling design air flow rate

The design zone cooling air flow rate in cubic meters per second. This input is an alternative to using the program calculated value.

Field: Heating design air flow method

The input must be either *design day* or *flow/zone*. *Design day* means the program will calculate the zone design heating air flow rate using the Zone Sizing input data and a design day simulation. *Flow/zone* means that the program will use the input of the field *heating design air flow rate* as the zone design heating air flow rate. . The default method is *design day*: i.e., the program uses the calculated design values.

Field: Heating design air flow rate

The design zone heating air flow rate in cubic meters per second. This input is an alternative to using the program calculated value.

The full IDD specification follows:

```
ZONE SIZING,
  \min-fields 13
  A1, \field Name of a zone
      \required-field
      \type object-list
      \object-list ZoneNames
  N1, \field Zone cooling design supply air temperature
      \required-field
      \type real
      \units C
  N2, \field Zone heating design supply air temperature
      \required-field
      \type real
      \units C
  N3, \field Zone cooling design supply air humidity ratio
      \required-field
      \type real
      \units kg-H20/kg-air
  N4, \field Zone heating design supply air humidity ratio
      \required-field
      \type real
      \units kg-H2O/kg-air
  A2, \field outside air method
      \type choice
      \key flow/person
      \key flow/zone
      \default flow/person
  N5, \field outside air flow per person
      \type real
      \units m3/s
      \default 0.00944
      \note .00944 is 20 cfm per person
  N6, \field outside air flow
      \type real
      \units m3/s
  N7, \field zone sizing factor
  A3, \field cooling design air flow method
      \type choice
      \key flow/zone
      \key design day
      \default design day
  N8, \field cooling design air flow rate
      \type real
      \units m3/s
      \minimum 0
      \default 0
  A4, \field heating design air flow method
      \type choice
      \key flow/zone
      \key design day
      \default design day
  N9;\field heating design air flow rate
      \type real
      \units m3/s
      \minimum 0
      \default 0
```

An IDF example:

```
Zone Sizing,
   SPACE5-1, ! zone name
   14.,   ! cooling supply air temperature
   50.,   ! heating supply air temperature
   0.009, ! cooling humidity ratio
   0.004; ! heating humidity ratio
```

Zone Sizing Outputs

The zone design air flow rates and loads are output on a comma separated file *eplusout.zsz*. The columns are clearly labeled. It will easily import into Excel or other spreadsheet program that accepts comma-delimited files. All of these values are design air flow rates and loads *calculated by the program*. No sizing factors have been applied.

The calculated zone design air flow rates and the user input or altered zone design air flow rates are also reported on the *eplusout.eio* file. The values are printed out for each zone as comma separated records beginning with *Zone Sizing*.

System Sizing

The System Sizing object contains the input needed to perform a central forced air system design air flow, heating capacity, and cooling capacity calculation for a system serving one or more zones. The information needed consists of the outside environmental conditions and the design supply air temperatures, outside air flow rate, and minimum system air flow ratio.

The outside conditions come from the design days in the input. A system sizing calculation is performed for every design day in the input file and the resulting maximum heating and cooling air flow rates and capacities are saved for use in the component sizing calculations.

Supply air conditions are specified by inputting a supply air temperature for cooling, a supply air temperature for heating, and a preheat temperature.

The system sizing calculation sums the zone design air flow rates to obtain a system supply air flow rate. The design conditions and the outside air flow rate are used to calculate a design mixed air temperature. The temperature plus the design supply air temperatures allows the calculation of system design heating and cooling capacities.

Field: name of an AIR PRIMARY LOOP object

The name of the Air Primary Loop corresponding to this System Sizing object. This is the air system for which the design calculation will be made using the input data of this System Sizing Object.

Field: type of load to size on

The user specified type of load on which to size the central system. The choices are *sensible*, *latent*, or *total*. Only *sensible* is operational.

Field: Design (minimum) outside air volumetric flow rate

The design outside air flow rate in cubic meters per second. Generally this should be the minimum outside air flow. It is used for both heating and cooling design calculations. The assumption for cooling is that any outside air economizer will be closed. If *Autosize* is input the outside air flow rate will be taken from the sum of the zone outside air flow rates.

Field: minimum system air flow ratio

The design minimum central air flow ratio. This ratio is the minimum system air flow rate divided by the maximum system air flow rate. The value must be between 0 and 1. Fir constant volume systems the ratio should be set to 1.

Field: Preheat design set temperature

The design air temperature exiting the preheat coil (if any) in degrees Celsius.

Field: Central cooling design supply air temperature

The design supply air temperature for cooling in degrees Celsius. This should be the temperature of the air exiting the central cooling coil.

Field: Central heating design supply air temperature

The design supply air temperature for heating in degrees Celsius. This can be either the reset temperature for a single duct system or the actual hot duct supply air temperature for dual duct systems. It should be the temperature at the exit of the main heating coil.

Field: Sizing Option

If the input is *coincident* the central system air flow rate will be sized on the sum of the coincident zone air flow rates. If the input is *noncoincident* the central system air flow rate will be sized on the sum of the noncoincident zone air flow rates. The default is noncoincident.

Field: Cooling 100% Outside Air

Entering *Yes* means the system will be sized for cooling using 100% outside air. Entering *No* means the system will be sized for cooling using minimum outside air (the default).

Field: Heating 100% Outside Air

Entering *Yes* means the system will be sized for heating using 100% outside air. Entering *No* means the system will be sized for heating using minimum outside air (the default).

Field: Central cooling design supply air humidity ratio

The design humidity ratio in kilograms of water per kilogram of dry air at the exit of the central cooling coil. The default is .008.

Field: Central heating design supply air humidity ratio

The design humidity ratio in kilograms of water per kilogram of dry air at the exit of the central heating coil. The default is .008.

The full IDD specification follows:

```
SYSTEM SIZING,
  \min-fields 12
  A1, \field name of an AIR PRIMARY LOOP object
      \required-field
      \type object-list
      \object-list AirPrimaryLoops
  A2, \field type of load to size on
      \required-field
      \type choice
      \key sensible
      \key latent
      \key total
  N1, \field Design (minimum) outside air volumetric flow rate
      \type real
      \units m3/s
      \autosizable
  N2, \field minimum system air flow ratio
      \required-field
      \type real
      \minimum 0.0
      \maximum 1.0
  N3, \field Preheat design set temperature
      \required-field
      \type real
      \units C
  N4, \field Central cooling design supply air temperature
      \required-field
      \type real
      \units C
  N5, \field Central heating design supply air temperature
      \required-field
      \type real
      \units C
  A3, \field Sizing Option
      \type choice
      \key coincident
      \key noncoincident
      \default noncoincident
  A4, \field Cooling 100% Outside Air
      \type choice
      \key yes
      \key no
      \default no
  A5, \field Heating 100% Outside Air
      \type choice
      \key yes
      \key no
      \default no
  N6, \field Central cooling design supply air humidity ratio
      \required-field
      \type real
      \default 0.008
      \units kg-H2O/kg-air
  N7; \field Central heating design supply air humidity ratio
      \required-field
      \type real
      \default 0.008
      \units kg-H2O/kg-air
```

An IDF example:

```
System Sizing,
   VAV Sys 1,                 ! system name
   sensible, ! load type to size on
   autosize, ! minimum outside air flow rate in m3/s
   0.3,      ! minimum system flow ratio
   7.0,      ! preheat temperature in C
   12.8,     ! cooling supply air temperature in C
   16.7,     ! heating supply air temperature in C
   noncoincident;
```

System Sizing Outputs

The system design air flow rates and heating and cooling capacities are output on a comma separated file *eplusout.ssz*. The columns are clearly labeled. It will easily import into Excel or other spreadsheet program that accepts comma-delimited files.

Plant Sizing

The Plant Sizing object contains the input needed for the program to calculate the heating, cooling, and condenser loop flow rates. This information is initially used by components that use water for heating or cooling such as hot or chilled water coils to calculate their maximum water flow rates. These flow rates are then summed for use in calculating the Plant Loop flow rates.

Field: name of a PLANT LOOP or CONDENSER LOOP object

The name of a Plant Loop or Condenser Loop object corresponding to this Plant Sizing object. This is the plant loop for which this data will be used for calculating the loop flow rate.

Field: loop type

The possible inputs are *heating*, *cooling*, or *condenser*.

Field: Design loop exit temperature

The water temperature in degrees Celsius at the exit of the supply side of the plant loop, Thus this is the temperature of the water supplied to the inlet of chilled or hot water coils.

Field: Design loop delta T

The design temperature rise (for cooling or condenser loops) or fall (for heating loops) in degrees Celsius across the demand side of a plant loop.

The full IDD specification is:

```
PLANT SIZING,
  \min-fields 4
  A1, \field name of a PLANT LOOP or CONDENSER LOOP object
      \required-field
      \type object-list
      \object-list PlantLoops
  A2, \field loop type
      \required-field
      \type choice
      \key heating
      \key cooling
      \key condenser
  N1, \field Design loop exit temperature
      \required-field
      \type real
      \units C
  N2; \field Design loop delta T
      \required-field
      \type real
      \units delK
      \minimum> 0.0
```

An IDF example:

```
Plant Sizing,
   Chilled Water Loop, ! name of loop
   cooling,            ! type of loop
   7.22,               ! chilled water supply temperature
   6.67;               ! chilled water delta T
```

Plant Sizing Outputs

The loop flow rates are reported on the *eplusout.eio* file along with the component sizing results.

HVAC: Primary and Secondary Systems

The HVAC and equipment section of the EnergyPlus input data dictionary and input data file are slightly more complex than the description of building geometry, internal gains, etc. because of the interconnections of the various parts of an HVAC system. In EnergyPlus, there are several portions to the HVAC simulation. All of these parts must be correctly specified in order to arrive at a valid simulation model. The goal of this section is to provide the interface developer with guidelines on what input is expected and also provide some background on basic EnergyPlus simulation methodology.

An EnergyPlus HVAC simulation consists of various components that are connected physically in the actual system by ducts, piping, etc. Every component in an HVAC system must have an inlet and outlet “node”. In the actual system, a node might be a point in the system at which fluid properties can be measured. In an EnergyPlus simulation, the nodes are points at which fluid properties are evaluated and passed on to subsequent equipment.

Components are linked together to form various loops within the simulation. Thus, the output node from one component also serves as the inlet node to the next component. Loops are constructed by defining these loops and also defining the components on the loops. The figure below shows a generic example of the loop-node concept.

Loop nodes are a key defining feature in EnergyPlus. As a result, it is recommended that one of the first steps taken in defining an HVAC system in EnergyPlus be the definition of a node diagram or map. This is helpful for visualization of the entire system. Such a map could be created electronically within an interface or could be kept in the background out of the sight of the user.

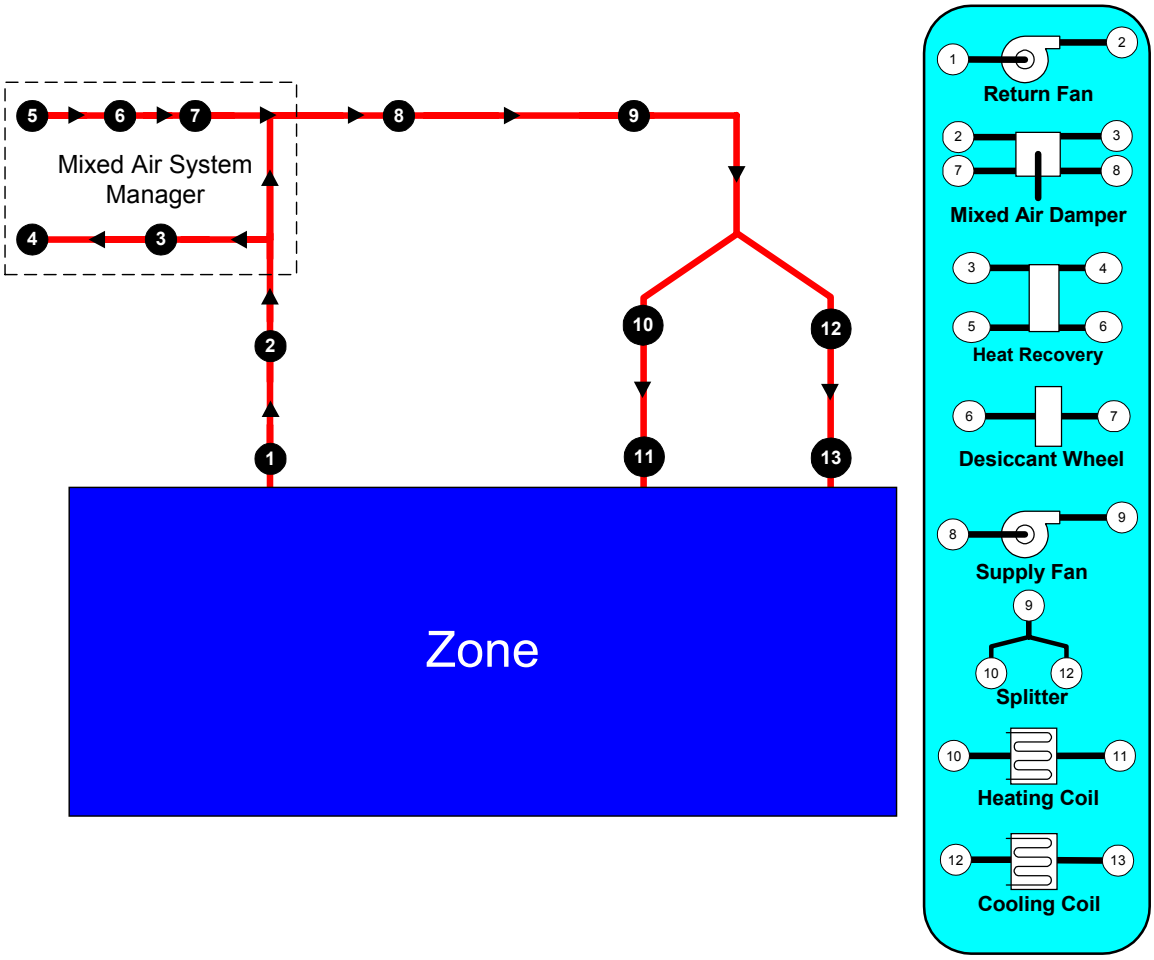

Figure 39. Example Node Diagram

So that these loops are manageable and more clearly defined both in the input and in the simulation, six different loop sections can be defined in an EnergyPlus input file. In general, these six types are in essence three pairs of loop sections that make up three distinct loops: a zone/air loop, a plant loop, and a condenser loop. The six loop section types are defined below.

Air Loop: The air loop is defined by the section of the zone/air loop that starts after the zone return streams are combined and continues on until just before any air stream(s) are branched off to individual zones. The starting point of the air loop is fairly straightforward. The ending point is slightly more complex but can be understood with some examples. For instance, in a terminal reheat system, the end of the air loop would typically be considered the node following the cooling coil. In a dual duct system, the air loop would have two ending points that would correspond to the nodes after the cooling coil and after the heating coil/humidifier. In most cases, the air loop has a single starting point and up to three ending points (for a 3 deck system).

Zone Equipment: The zone equipment section of the input file is defined as more or less the rest of the zone/air loop (outside air is handled separately as a subset of the air loop). This includes everything from where the ducts are split to serve various zones up through where the return ducts from various zones are mixed into a single return duct. Zone equipment can include dampers and reheat coils as well as zone specific conditioning systems such as thermostatic baseboard or a window air conditioner. Most control issues are typically dealt with in the zone equipment section of the simulation.

Plant Loop Demand Side: One side of the plant is where energy is "demanded" by various components that make up the air loop or zone equipment. Typically, this is the water side of equipment such as coils, baseboard, radiant heating and cooling, etc. The demand side of this loop can also include mixers, flow splitters, and a bypass.

Plant Loop Supply Side: The other side of the plant loop is where energy is "supplied" by various components. The components typically found on the supply side include pumps, boilers, chillers, purchased heating and cooling, ice storage, etc. As with the demand side, this loop can also include mixers, flow splitters, and a bypass.

Condenser Loop Demand Side: The condenser loop demand side is analogous to the plant loop demand side. In fact, much of the code and structures are similar. In the case of the condenser loop, energy is typically "demanded" by a chiller condenser. Note that coils, radiant systems, etc. could also be a part of the demand side in the case of free cooling chillers, well water condensers, ground loops, etc.

Condenser Loop Supply Side: This side of the condenser loop consists of the cooling tower, well water, etc. type components. It supplies (rejects) energy that would then be used at the chiller condensers on the other side of the loop.

The section of the input file for describing the HVAC system tends to follow this structure presented above. Both plant and condenser loops are defined with a master description and then branch off into supply and demand side details. Linkage between the two sides is done using node numbers in the master statement. The air loop and zone equipment descriptions are slightly more complex due to the wide range of potential systems that are anticipated. Note that in every section controls become a key element and must be addressed. Each of the following sections details either a loop, a portion of a loop, or controls.

Group – Node-Branch Management

Nodes, **Branch Lists** and **Branches** define the topography of the HVAC connections.

Node List

For convenience, the NODE LIST statement can be used to identify all the nodes before use. It is not required for this purpose. The advantage of listing all the nodes in this manner would allow any "node" output variables to be grouped according to user wishes.

There are other lines of input syntax that require the use of a NODE LIST as part of the input. These syntax items include: OUTSIDE AIR INLET NODE LIST and the SET POINT MANAGER statements. In these two cases, the use of a NODE LIST statement is mandatory if there is more than one node in this particular "list". For example, if the outside air only has a single inlet node, then the name of that node can replace the node list name in the input syntax. As a result of this mandatory specification of node lists for certain types of input, nodes can, obviously, and may be members of more than one list.

Field: Node List Name

This alpha designation must be unique among all the Node List Names. It is used as reference in various objects (e.g. OUTSIDE AIR INLET NODE LIST).

Field: Node_ID (up to 25 allowed)

Each unique Node identifier creates a Node structure with various attributes depending on the type of node. Typical values include Temperature, Mass Flow Rate, and Temperature Set Point. The alpha designators are associated with a particular node.

```
NODE LIST,
  A1 , \field Node List Name
       \type alpha
  A2 , \field Node_ID_1
       \type alpha
  A3 , \field Node_ID_2
       \type alpha
  A4 , \field Node_ID_3
       \type alpha
-- etc to 25 Node Ids per Node List
```

Though each NODE LIST is limited to 25 nodes, several node lists may be entered if you choose to identify all the nodes up front. For example:

```
NODE LIST, Nodes1-25,
NODE_1,NODE_2,NODE_3,NODE_4,NODE_5,NODE_6,NODE_7,NODE_8,NODE_9,NODE_10,
NODE_11,NODE_12,NODE_13,NODE_14,NODE_15,NODE_16,NODE_17,NODE_18,NODE_19,NODE_20,
NODE_21,NODE_22,NODE_23,NODE_24,NODE_25;
NODE LIST, Nodes26-49,NODE_26,NODE_27,NODE_28,NODE_29,NODE_30,
NODE_31,NODE_32,NODE_33,NODE_34,NODE_35,NODE_36,NODE_37,NODE_38,NODE_39,NODE_40,
NODE_41,NODE_42,NODE_43,NODE_44,NODE_45,NODE_46,NODE_47,NODE_48,NODE_49;
```

Node List Output

A simple detail of Nodes and numbers assigned appears in the eplusout.eio file:

```
! <NodeNumber>,<Node Name>
 1,ZONE 1 REHEAT AIR OUTLET NODE
 2,ZONE 2 REHEAT AIR OUTLET NODE
 3,ZONE 3 REHEAT AIR OUTLET NODE
 4,AIR LOOP OUTLET NODE
 5,AIR LOOP INLET NODE
 6,RETURN AIR MIXER OUTLET
 7,ZONE EQUIPMENT INLET NODE
 8,COOLING COIL AIR INLET NODE
 9,CW DEMAND INLET NODE
 10,CW DEMAND ENTRANCE PIPE OUTLET NODE
…
```

In addition, properties of each node is available during the simulation:

```
HVAC,Average,System Node Temp[C]
HVAC,Average,System Node MassFlowRate[kg/s]
HVAC,Average,System Node Humidity Ratio
```

Branch List

A branch list is intended to define the branches or portions of a particular loop that are present on an individual loop such as a plant or condenser loop. Thus, the BRANCH LIST syntax simply provides a list of branch names (see BRANCH syntax) that then refer to more detailed syntax in another part of the input file. The syntax for describing a list of branches is given below.

```
BRANCH LIST,
 \memo list must be in simulation and connection order
   A1, \field Branch List Name
       \reference BranchLists
   A2, \field Branch Name 1
       \type object-list
       \object-list Branches
   A3, \field Branch Name 2
       \type object-list
       \object-list Branches
   A4, \field Branch Name 3
       \type object-list
       \object-list Branches
. . . . . etc
   A50, \field Branch Name 49
        \type object-list
        \object-list Branches
   A51; \field Branch Name 50
        \type object-list
        \object-list Branches
```

Each branch description begins with an identifying name and is followed by a list of up to 50 branch names. These names refer to the BRANCH syntax described in the next section of this document.

An example of this statement in an IDF is:

```
BRANCH LIST, Cooling Supply Side Branches,
        CW Pump Branch,
        Little Chiller Branch,
        Big Chiller Branch,
        Purchased Cooling Branch,
        Supply Bypass Branch,
        Cooling Supply Outlet;
```

Branch List Output

No output directly related to Branch Lists current is presented.

Branch

Branches can be considered the mid-level grouping of items in the EnergyPlus HVAC loop scheme. Components are the lowest level of information. A collection of components in series forms a branch. Every branch must have at least one component, but it may have several components in series. The **branch** defines the order that components appear on the branch. Moreover, a collection of branches and their connecting information form a loop. Therefore, a branch is a collection of components while a loop is a collection of branches. Thus, components are specified for particular HVAC loops by assigning them to branches and then connecting those branches together to form a loop. It should be noted that each component also has at least two nodes associated with it—an inlet node and an outlet node. These nodes, by default, are also part of the branch to which their components are assigned. It should be noted that each branch must have at least one component on it. A “null” branch such as one where the first component on the loop is in reality a splitter or mixer should be defined as a single PIPE component.

Field: Branch Name

This alpha field is the identifying name that allows the branch to be referenced by other elements such as the PLANT LOOP and CONDENSER LOOP statements.

Field: Maximum Branch Flow Rate

This field is the maximum flow rate (m^3/sec) allowed on a particular branch. This number will set an absolute maximum flow rate for all components on the loop. Even if components are defined with a higher flow rate, EnergyPlus will limit the flow on this particular branch to the value entered here by the user. Currently this is used in the Air Loop and is not a required field in the Plant and Condenser Loop. The example files for the Plant and Condenser Loops leave this field blank to simplify flow input.

Field Set (Branch Specifications) – up to 11 allowed

Following the two introductory items, there are up to eleven groups of 5 repeated items: a type, a name, inlet and outlet node names, and a branch control type. All of these items refer to a particular component on the branch. The first component defined by these items will be the first component on this branch, etc. through the end of the list.

Field: Comp Type

This field is the component type. The component type refers to other elements within the input file and specifies what kind of component this is. The objects in the "Group – Plant-Condenser Equipment" section are valid here when the Branch is used in Plant specifications. Fans, coils and Outside Air Systems are also valid component types for the Branch object. Pipes are also valid for this field.

Field: Comp Name

The component name is a reference name to distinguish between potentially multiple occurrences of a particular component type in an input file. The set of component type and component name must be unique. (You can only have 1 BOILER:SIMPLE with name MYBOILER).

Field: Comp Inlet Node Name

This field references an inlet node name that will be found in the actual component specification.

Field: Comp Outlet Node Name

This field references an outlet node name that will be found in the actual component specification.

Field: Comp Branch Control Type

The final item in each field-set is the component flow control and how this component relates to the overall flow of the branch. If the field value is **ACTIVE**, then this component will try to control the flow through this branch within the limits of the other components on the branch. A **PASSIVE** component will simply take whatever amount of flow has been passed to it. The **BYPASS** designation should only be used for a branch that has a single component (usually a PIPE). A bypass is used to handle excess flow when a pump or fan cannot throttle down to send only the amount of flow requested by other components on the loop.

```
BRANCH,
   A1,  \field Branch Name
        \reference Branches
        \memo List components on the branch in simulation and connection order
        \memo Note: this should NOT include splitters or mixers which define
        \memo endpoints of branches
   N1, \field Maximum Branch Flow Rate
       \units m3/sec
   A2, \field Comp1 Type
   A3, \field Comp1 Name
   A4, \field Comp1 Inlet Node Name
   A5, \field Comp1 Outlet Node Name
   A6, \field Comp1 Branch Control Type
       \type choice
       \key ACTIVE
       \key PASSIVE
       \key BYPASS
       \note for ACTIVE, Component tries to set branch flow
       \note for PASSIVE, Component does not try to set branch flow
       \note for BYPASS,  Component designates a loop bypass
   A7, \field Comp2 Type
   A8, \field Comp2 Name
   A9, \field Comp2 Inlet Node Name
   A10, \field Comp2 Outlet Node Name
   A11, \field Comp2 Branch Control Type
       \type choice
       \key ACTIVE
       \key PASSIVE
       \key BYPASS
-- reduced for brevity, up to 11 components allowed per branch
```

An example of this statement in an IDF is:

```
BRANCH, Air Loop Main Branch,
 1.3,
 FAN:SIMPLE:ConstVolume, Supply Fan 1, Air Loop Inlet Node, Cooling Coil Air Inlet Node, ACTIVE,
 COIL:Water:DetailedFlatCooling, DetCoolCoil, Cooling Coil Air Inlet Node, Air Loop Outlet, PASSIVE;
```

Branch Output

The components on a branch are in series and that list is in simulation and connection order. Each branch must obey the rules: the outlet for component 1 has to have the same node name as the inlet for component 2, and so forth.

Eplusout.err contains the test for “individual branch integrity”:

```
   ************* Testing Individual Branch Integrity
   ************* Testing Branch=AIR LOOP MAIN BRANCH
   ************* ....passed
   ************* Testing Branch=COOLING DEMAND INLET
   ************* ....passed
   ************* Testing Branch=COOLING COIL BRANCH
   ************* ....passed
   ************* Testing Branch=DEMAND BYPASS BRANCH
   ************* ....passed
   ************* Testing Branch=COOLING DEMAND OUTLET
   ************* ....passed
   ************* Testing Branch=COOLING SUPPLY OUTLET
   ************* ....passed
```

Connector List

A connector list is a collection of either one or two connection devices (MIXER or SPLITTER). Due to the definition of a loop in EnergyPlus, there is a maximum of one mixer and one splitter allowed for each loop segment. This limitation still allows a tremendous amount of flexibility to the user and can also still be solved within a reasonable amount of time and

without a complex solver routine. The connection list simply allows the specification of the types and names of these devices. This allows the main loop statements to have the flexibility to have multiple lists that can have one or more item.

Field: Connector List Name

This field is an identifying name that will be referenced to main loop statements using this connector list. The name must be unique among connector list names.

Field-Set: Connection Type and Identifying Name (up to 2 allowed)

Depending on the loop, either one or two of the connectors will be specified. If this particular loop only has a single connector (either MIXER or SPLITTER), then only the first two items (type of connection and identifying name of connector) are included. If both a mixer and splitter are present, the additional type of connection and identifying name must be included. Note that the order that the items appear is inconsequential—either the MIXER or the SPLITTER may appear first. This will not affect the simulation.

Field: Type of Connector 1

This field contains the connector type **MIXER** or **SPLITTER**.

Field: Name of Connector 1

This field is an identifying name for the connector. It will be used by other objects in the input file.

Field: Type of Connector 2 (optional)

This field contains the connector type **MIXER** or **SPLITTER**.

Field: Name of Connector 2 (optional)

This field is an identifying name for the connector. It will be used by other objects in the input file.

```
CONNECTOR LIST,
        \memo only two connectors allowed per loop
        \memo if two entered, one must be SPLITTER and one must be MIXER
    A1, \field Connector List Name
        \reference ConnectorLists
    A2, \field Type of Connector 1
        \key SPLITTER
        \key MIXER
    A3, \field Name of Connector 1
    A4, \field Type of Connector 2
        \key SPLITTER
        \key MIXER
    A5; \field Name of Connector 2
```

An example of this statement in an IDF is:

```
        CONNECTOR LIST, Cooling Supply Side Connectors,
                SPLITTER, CW Loop Splitter,
                MIXER, CW Loop Mixer;
```

Connector List Output

No output directly related to Connector Lists currently is presented.

Pipe

In reality, every component is connected to its closest neighbors via a pipe or a duct. At the current time, such detail is not needed in EnergyPlus. Thus, the PIPE component is currently used more as a connection device (for branches that really do not have any components associated with them) or as a bypass than anything else. As such, its input is very simple and its algorithm is equally simple. The current algorithm for a pipe is simply to pass the inlet conditions to the outlet of the pipe component. In the future, when pressure simulations and friction tabulation capabilities are added to EnergyPlus, a pipe may be a required element between components.

Field: PipeName

This alpha field is used as an identifying field for the pipe.

Field: Inlet Node Name

This alpha field is used as an identifying field for the pipe inlet node.

Field: Outlet Node Name

This alpha field is used as an identifying field for the pipe outlet node.

```
PIPE,
 ! [Passes inlet node state variables to outlet node state variables]
   A1, \field PipeName
   A2, \field Inlet Node Name
   A3; \field Outlet Node Name
```

An example of this statement in an IDF is:

```
        PIPE,
             Demand Side Inlet Pipe,
             CW Demand Inlet Node,
             CW Demand Entrance Pipe Outlet Node;
```

Pipe Output

There are no outputs directly related to Pipes.

Group – Plant-Condenser Loops

Plant Loop

The main elements of the Plant Loop syntax are described in further detail below. A map of how the input for this portion of the HVAC input fits together is provided in the following diagram.

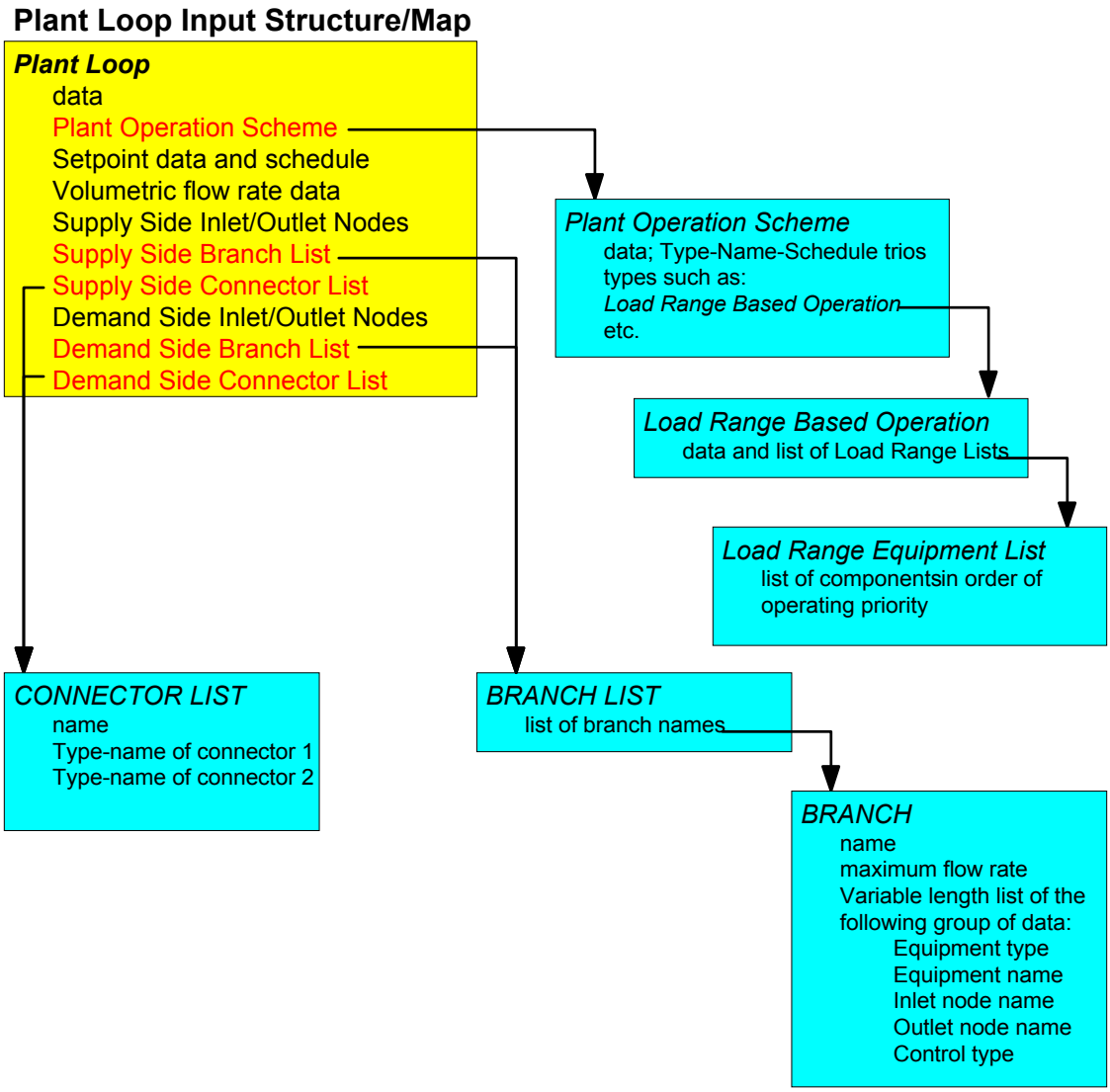

Figure 40. Plant Loop Input Syntax Map

Field: Plant Loop Name

This alpha field is used as an identifying field for the plant loop.

Field: Fluid Type

This alpha field must be a keyword selected from the list of available fluids for an EnergyPlus plant loop. Note from the IDD specification that the only currently acceptable one is “Water”.

Field: Plant Operation Scheme List Name

This alpha field is used as an identifying field for the plant operation scheme. This field ties to the Plant Operation Schemes input structure, which must also be defined.

Field: Loop Temperature Setpoint Schedule Name

This alpha field is used as an identifying field for the Loop Temperature Setpoint Schedule.. This field ties to the ScheduleType input structure, which must also be defined.

Field: Maximum Loop Temperature

This numeric field contains the maximum allowable temperature in Celsius for this loop.

Field: Minimum Loop Temperature

This numeric field contains the minimum allowable temperature in Celsius for this loop.

Field: Loop Volumetric Flow Rate Setpoint

This numeric field contains the desired loop flow rate in cubic meters per second.

Field: Maximum Loop Volumetric Flow Rate

This numeric field contains the maximum loop flow rate in cubic meters per second. This parameter is also used to determine the potential stability of a loop when the user chooses to autosize the loop volume or enters a value for loop volume that may result in loop instability. Increasing this parameter unnecessarily can cause the recalculation of the loop volume and may lead to loop temperatures which do not follow the desired schedule or the false notion that the loop is attached to an excessively large and well-mixed tank. See Volume of the Plant Loop below and the Engineering Manual for more details.

Field: Minimum Loop Volumetric Flow Rate

This numeric field contains the minimum loop flow rate in cubic meters per second.

Field: Volume of the Plant Loop

Volume of the plant loop in m^3. This numeric field contains the loop volume for the entire loop, ie. both the demand side the the supply side. This is used for the loop capacitance calculation which updates the loop temperature from one time step to the next. This field is autosizable and uses the loop stability criteria equal to 0.8 for this calculation. This is described in the Engineering Manual. If a value of zero or some other quantity which does not meet the stability criteria is entered for this field, EnergyPlus will recalculate this parameter. This may lead to larger than expected loop masses and potentially inaccurate solutions. See the Engineering Manual and Maximum Loop Volumetric Flow Rate above for more details.

Field: Plant Side Inlet Node Name

This alpha field contains the identifying name given to the Plant Side Inlet Node.

Field: Plant Side Outlet Node Name

This alpha field contains the identifying name given to the Plant Side Outlet Node.

Field: Plant Side Branch List Name

This alpha field contains the identifying name given to the Plant Side Branch List.

Field: Plant Side Connector List Name

This alpha field contains the identifying name given to the Plant Side Connector List.

Field: Demand Side Inlet Node Name

This alpha field contains the identifying name given to the Demand Side Inlet Node.

Field: Demand Side Outlet Node Name

This alpha field contains the identifying name given to the Demand Side Outlet Node.

Field: Demand Side Branch List Name

This alpha field contains the identifying name given to the Demand Side Branch List.

Field: Demand Side Connector List Name

This alpha field contains the identifying name given to the Demand Side Connector List.

Field: Load Distribution Scheme

This alpha field contains the Load Distribution Scheme Keyword. The Load Distribution Scheme selects the algorithm used to sequence equipment operation in order to meet the plant loop demand. Currently, two schemes are functional. **Sequential** uses each piece of equipment to its maximum part load ratio and will operate the last required piece of equipment between its minimum and maximum part load ratio in order to meet the loop demand. **Optimal** operates each piece of equipment at its optimal part load ratio and will operate the last component between its minimum and maximum part load ratio in order to meet the loop demand.

The complete IDD for the Plant Loop is shown below:

```
PLANT LOOP,
  A1 , \field Plant Loop Name
       \required-field
      \reference PlantLoops
  A2 , \field Fluid Type
       \required-field
       \type choice
       \key Water
       \default Water
  A3 , \field Plant Operation Scheme List Name
       \required-field
       \type object-list
       \object-list PlantOperationSchemes
  A4 , \field Loop Temperature Setpoint Schedule Name
       \required-field
       \type object-list
       \object-list ScheduleNames
  N1 , \field Maximum Loop Temperature
       \required-field
       \units C
  N2 , \field Minimum Loop Temperature
       \required-field
       \units C
  N3 , \field Maximum Loop Volumetric Flow Rate
       \required-field
       \units m3/s
       \autosizable
  N4 , \field Minimum Loop Volumetric Flow Rate
       \required-field
       \units m3/s
       \default 0.0
  N5,  \field volume of the plant loop
       \required-field
       \units m3
       \autosizable
```

```
A5,  \field Plant Side Inlet Node Name
A6,  \field Plant Side Outlet Node Name
A7,  \field Plant Side Branch List Name
      \object-list BranchLists
A8,  \field Plant Side Connector List Name
      \object-list ConnectorLists
A9,  \field Demand Side Inlet Node Name
A10, \field Demand Side Outlet Nodes Name
A11, \field Demand Side Branch List Name
      \object-list BranchLists
A12, \field Demand Side Connector List Name
      \object-list ConnectorLists
A13; \field Load Distribution Scheme
      \type choice
      \key OPTIMAL
      \key SEQUENTIAL
      \default Sequential
```

An example of this statement used in an IDF is:

```
PLANT LOOP,
  Hot Water Loop,         !- Plant Loop Name
  Water,                  !- Fluid Type
  Hot Loop Operation,     !- Plant Operation Scheme List Name
  HW Loop Temp Schedule,  !- Loop Temperature Setpoint Schedule Name
  100,                    !- Maximum Loop Temperature {C}
  10,                     !- Minimum Loop Temperature {C}
  autosize,               !- Maximum Loop Volumetric Flow Rate {m3/s}
  0.0,                    !- Minimum Loop Volumetric Flow Rate {m3/s}
  autosize,               !- volume of the plant loop {m3}
  HW Supply Inlet Node,   !- Plant Side Inlet Node Name
  HW Supply Outlet Node,  !- Plant Side Outlet Node Name
  Heating Supply Side Branches,    !- Plant Side Branch List Name
  Heating Supply Side Connectors,  !- Plant Side Connector List Name
  HW Demand Inlet Node,   !- Demand Side Inlet Node Name
  HW Demand Outlet Node,  !- Demand Side Outlet Nodes Name
  Heating Demand Side Branches,    !- Demand Side Branch List Name
  Heating Demand Side Connectors,  !- Demand Side Connector List Name
  Optimal;                !- Load Distribution Scheme
```

Plant Loop Outputs

In the following output variables, “Debug” denotes variables that are used primarily by the developers and whose names may be cryptic (i.e. SSInletNode – Supply Side Inlet Node).

```
HVAC,Average,Plant Loop Cooling Demand[W]
HVAC,Average,Plant Loop Heating Demand[W]
HVAC,Average,Plant Loop InletNode Flowrate[kg/s]
HVAC,Average,Plant Loop InletNode Temperature[C]
HVAC,Average,Plant Loop OutletNode Temperature[C]
HVAC,Average,Debug Unmet Plant Loop Demand[W]
HVAC,Average,Debug Plant Loop RemDemand[W]
HVAC,Average,Debug Plant Loop Bypass Fraction
HVAC,Average,Debug SSInletNode Flowrate[kg/s]
HVAC,Average,Debug SSInletNode Temperature[C]
HVAC,Average,Debug SSOutletNode Flowrate[kg/s]
HVAC,Average,Debug SSOutletNode Temperature[C]
```

Condenser Loop

The map for condenser loop input is very similar to that for the plant loop. The main differences are some keywords and applicable components. This is depicted in the following diagram.

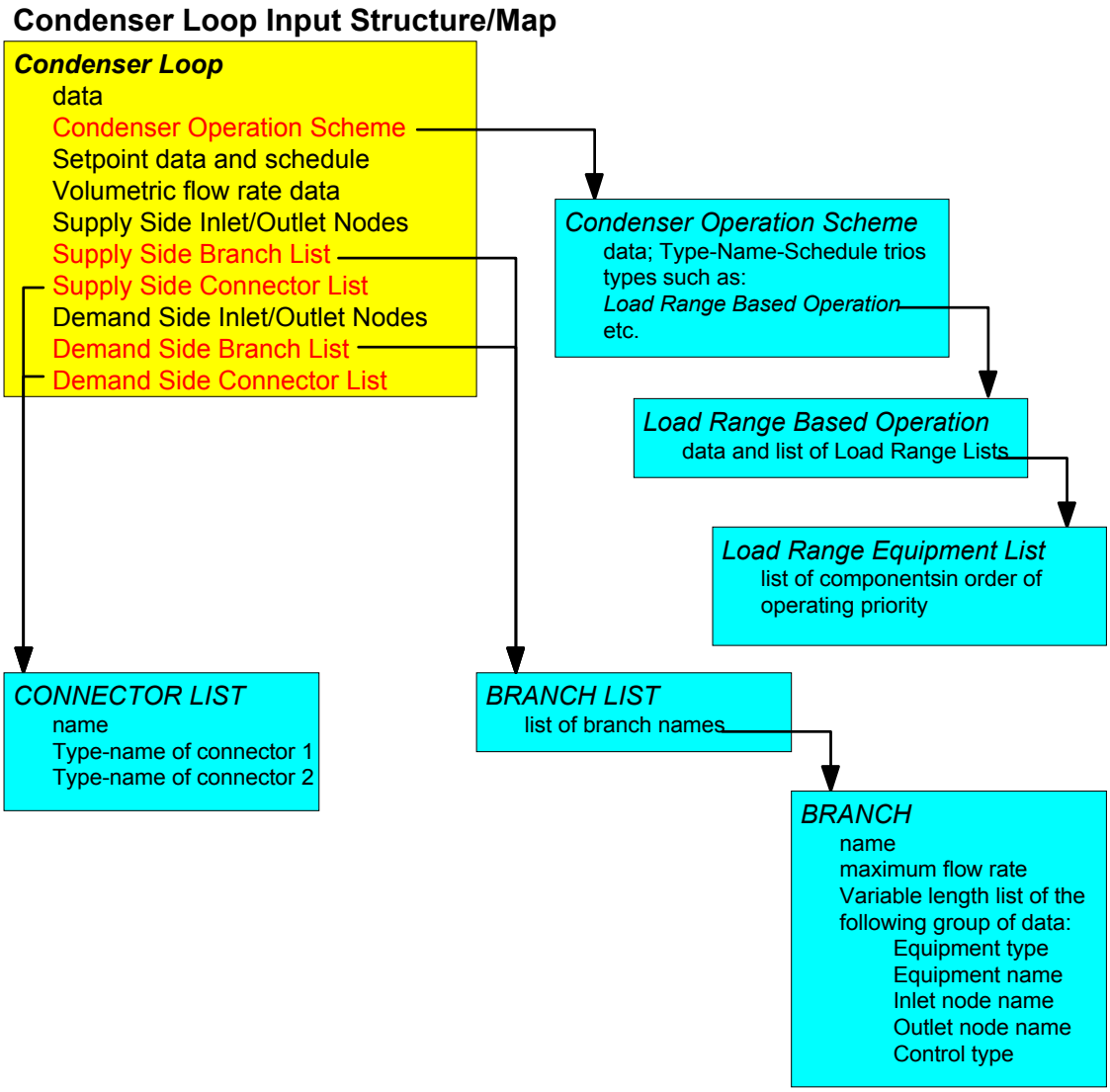

Figure 41. Condenser Loop Input Syntax Map

Field: Condenser Loop Name

This alpha field is used as an identifying field for the condenser loop.

Field: Fluid Type

This alpha field must be a keyword selected from the list of available fluids for an EnergyPlus plant loop. Note from the IDD specification that the only currently acceptable one is “Water”.

Field: Condenser Operation Scheme List Name

This alpha field is used as an identifying field for the condenser operation scheme. This field ties to the Condenser Operation Schemes input structure, which must also be defined.

Field: Loop Temperature Setpoint Schedule Name or Reference

This alpha field is used as an identifying field for the Loop Temperature Setpoint Schedule. This field ties to the ScheduleType input structure, which must also be defined. Another use

can be to specify a reference for a condenser type ie. cooling tower or ground heat exchanger. Therefore two additional references can be specified:

AIR to use the outdoor air wet-bulb as the setpoint, or

GROUND to use the ground temperature as the setpoint.

These conditions vary as the outdoor wet bulb and ground temperatures vary with the weather file or ground temperature specification.

Field: Maximum Loop Temperature

This numeric field contains the maximum allowable temperature in Celsius for this loop.

Field: Minimum Loop Temperature

This numeric field contains the minimum allowable temperature in Celsius for this loop. This minimum loop temperature is used by the cooling towers to make sure that the minimum is not violated to keep the equipment safe. The minimum is also used to trigger the minimum temperature warning and will notify the user if it gets too low.

Field: Loop Volumetric Flow Rate Setpoint

This numeric field contains the desired loop flow rate in cubic meters per second.

Field: Maximum Loop Volumetric Flow Rate

This numeric field contains the maximum loop flow rate in cubic meters per second.

Field: Minimum Loop Volumetric Flow Rate

This numeric field contains the minimum loop flow rate in cubic meters per second.

Field: Volume of the Plant Loop

Volume of the plant loop in m^3. This numeric field contains the loop volume for the entire loop, ie. both the demand side the the supply side. This is used for the loop capacitance calculation which updates the loop temperature from one time step to the next. This field is autosizable and uses the loop stability criteria equal to 0.8 for this calculation. This is described in the Engineering Manual.

Field: Condenser Side Inlet Node Name

This alpha field contains the identifying name given to the Condenser Side Inlet Node.

Field: Condenser Side Outlet Node Name

This alpha field contains the identifying name given to the Condenser Side Outlet Node.

Field: Condenser Side Branch List Name

This alpha field contains the identifying name given to the Condenser Side Branch List.

Field: Condenser Side Connector List Name

This alpha field contains the identifying name given to the Condenser Side Connector List.

Field: Demand Side Inlet Node Name

This alpha field contains the identifying name given to the Demand Side Inlet Node.

Field: Demand Side Outlet Nodes Name

This alpha field contains the identifying name given to the Demand Side Outlet Node.

Field: Condenser Demand Side Branch List Name

This alpha field contains the identifying name given to the Demand Side Branch List.

Field: Condenser Demand Side Connector List Name

This alpha field contains the identifying name given to the Demand Side Connector List.

Field: Load Distribution Scheme

This alpha field contains the Load Distribution Scheme Keyword. The Load Distribution Scheme selects the algorithm used to sequence equipment operation in order to meet the plant loop demand. Currently, two schemes are functional. **Sequential** uses each piece of equipment to its maximum part load ratio and will operate the last required piece of equipment between its minimum and maximum part load ratio in order to meet the loop demand. **Optimal** operates each piece of equipment at its optimal part load ratio and will operate the last component between its minimum and maximum part load ratio in order to meet the loop demand.

The IDD for Condenser loop is:

```
CONDENSER LOOP,
  A1 , \field Condenser Loop Name
        \required-field
        \reference PlantLoops
  A2 , \field Fluid Type
        \required-field
        \type choice
        \key WATER
        \default Water
  A3 , \field Condenser Operation Scheme List Name
        \required-field
        \type object-list
        \object-list CondenserOperationSchemes
  A4 , \field Condenser Loop Temperature Setpoint schedule or reference
        \note Temperature setpoint schedule name, or
        \note AIR to use the outdoor air wet-bulb as the setpoint, or
        \note GROUND to use the ground temperature as the setpoint
        \required-field
        \type alpha
  N1 , \field Maximum Loop Temperature
        \required-field
        \units C
  N2 , \field Minimum Loop Temperature
        \required-field
        \units C
        \minimum 5.0
  N3 , \field Maximum Loop Volumetric Flow Rate
        \required-field
        \units m3/s
  N4 , \field Minimum Loop Volumetric Flow Rate
        \required-field
        \units m3/s
  N5,  \field volume of the plant loop
        \required-field
        \units m3
        \autosizable
  A5,  \field Condenser Side Inlet Node Name
  A6,  \field Condenser Side Outlet Node Name
  A7,  \field Condenser Side Branch List Name
        \object-list BranchLists
  A8,  \field Condenser Side Connector List Name
        \object-list ConnectorLists
  A9,  \field Demand Side Inlet Node Name
  A10, \field Demand Side Outlet Nodes Name
  A11, \field Condenser Demand Side Branch List Name
        \object-list BranchLists
  A12, \field Condenser Demand Side Connector List Name
        \object-list ConnectorLists
  A13; \field Load Distribution Scheme
        \type choice
        \key Optimal
        \key Sequential
        \default Sequential
```

An example of this statement used in an IDF is:

```
CONDENSER LOOP,
    Chilled Water Condenser Loop,
    Water,
    Tower Loop Operation,
    AIR,
    80,  ![Maximum Loop Temperature]
    10,   ![Minimum Loop Temperature]
    0.0011,![Maximum Loop Volumetric Flow Rate]
    0,   ![Minimum Loop Volumetric Flow Rate]
    autosize,   !- volume of the plant loop
    Condenser Supply Inlet Node,Condenser Supply Outlet Node, !condenser supply side inlet/outlet
            Condenser Supply Side Branches,
            Condenser Supply Side Connectors,
    Condenser Demand Inlet Node, Condenser Demand Outlet Node, !plant demand side inlet/outlet
            Condenser Demand Side Branches,
            Condenser Demand Side Connectors,
    Sequential;
```

Condenser Loop Outputs

```
HVAC,Average,Condenser Loop Inlet Temperature [C]
HVAC,Average,Condenser Loop Outlet Temperature [C]
HVAC,Average,Cond Loop Inlet Temp [C]
HVAC,Average,Cond Loop Outlet Temp [C]
```

Connection Component:PlantLoop

This component is used to connect 2 plant loops together typically to create a Primary-Secondary plant loop system. This system is typically multiple chillers on the primary constant volume loop, with a variable volume flow system to provide flow to multiple cooling coils. This component is simulated on the Supply Side of the Secondary Loop and the results are provided to the Demand Side of the Primary Loop. Look in the Engineering Document for more explanation of the Primary-Secondary Loop Systems.

```
CONNECTION COMPONENT:PLANTLOOP,
       \memo This component is used to connect to Plant Loops together.
  A1 , \field Connection Component Name
       \required-field
  A2 , \field Primary_Side_Inlet_Node
       \required-field
  A3 , \field Primary_Side_Outlet_Node
       \required-field
  A4 , \field Secondary_Side_Inlet_Node
       \required-field
  A5 , \field Secondary_Side_Outlet_Node
       \required-field
  N1,  \field Primary Side Design Max Flow Rate
       \required-field
       \units m3/s
  A6,  \field Primary Side Flow Mode
       \note Sets the Primary Side to either a Variable or Constant Flow Simulation
       \type choice
       \key ConstantFlow
       \key VariableFlow  !Not implemented yet
       \default ConstantFlow
  N2,  \field Secondary Side Design Max Flow Rate
       \required-field
       \units m3/s
  A7;  \field Secondary Side Flow Mode
       \note Sets the Primary Side to either a Variable or Constant Flow Simulation
       \type choice
       \key ConstantFlow  !Not implemented yet
       \key VariableFlow
       \default VariableFlow
```

Field: Connection Component Name

This alpha field contains the identifying name for the Connection Component.

Field: Primary_Side_Inlet_Node

This alpha field contains the identifying name for the primary side inlet node.

Field: Primary_Side_Outlet_Node

This alpha field contains the identifying name for the primary side outlet node.

Field: Secondary_Side_Inlet_Node

This alpha field contains the identifying name for the secondary side inlet node.

Field: Secondary_Side_Outlet_Node

This alpha field contains the identifying name for the secondary side outlet node.

Field: Primary Side Design Max Flow Rate

Primary Side Design Max Flow Rate is a required field that initializes the primary side of the flow component and has input units of m3/s. This field needs to be set to the same value as the associated Plant Loop.

Field: Primary Side Flow Mode

This alpha field determines if the Primary Side is either a Variable or Constant Flow Simulation. The default, if not specified, is Constant Flow.

Field Secondary Side Design Max Flow Rate

Secondary Side Design Max Flow Rate is a required field that initializes the secondary side of the flow component and has input units of m3/s. This field needs to be set to the same value as the associated Plant Loop.

Field Secondary Side Flow Mode

This alpha field determines if the Secondary Side is either a Variable or Constant Flow Simulation. The default, if not specified, is Variable Flow.

An example of this statement in an IDF is:

```
    CONNECTION COMPONENT:PLANTLOOP,
       PriSec Loop Connection,
          CW Pri ConnComp Inlet Node,  ! Primary_Side_Inlet_Node
          CW Pri ConnComp Outlet Node, ! Primary_Side_Outlet_Node
          CW Sec ConnComp Inlet Node,  ! Secondary_Side_Inlet_Node
          CW Sec ConnComp Outlet Node, ! Secondary_Side_Outlet_Node
          0.0011 ,                     ! Max Primary Loop Volumetric Flow Rate
          ConstantFlow,                ! Primary Side Flow Mode
          0.001 ,                     ! Max Secondary Loop Volumetric Flow Rate
          VariableFlow;                ! Secondary Side Flow Mode
```

Connection Component:PlantLoop Outputs

This component does not have direct outputs from the component since all of the information can be obtained from other report variables and directly from the inlet and outlet nodes.

```
Report Variable,* , Plant Loop InletNode Temperature, hourly;
Report Variable,* , Plant Loop OutletNode Temperature, hourly;
Report Variable,* , Plant Loop InletNode Flowrate, hourly;
.
  or
.
Report Variable, CW Pri ConnComp Outlet Node,System Node MassFlowRate, hourly;
Report Variable, CW Pri ConnComp Outlet Node,System Node temp, hourly;
```

Heat Recovery Loop

The plant heat recovery loop connects plant equipment with heat recovery options to the hot water storage tank on a plant hot water loop. The heat recovery loop is shown in the figure below. The user inputs the name, inlet node and outlet node of each component on the loop. In addition, the name of the hot water storage tank along with its inlet and outlet nodes is required. Pumping power required to operate the heat recovery loop is calculated on the basis of the total pressure head across the pump.

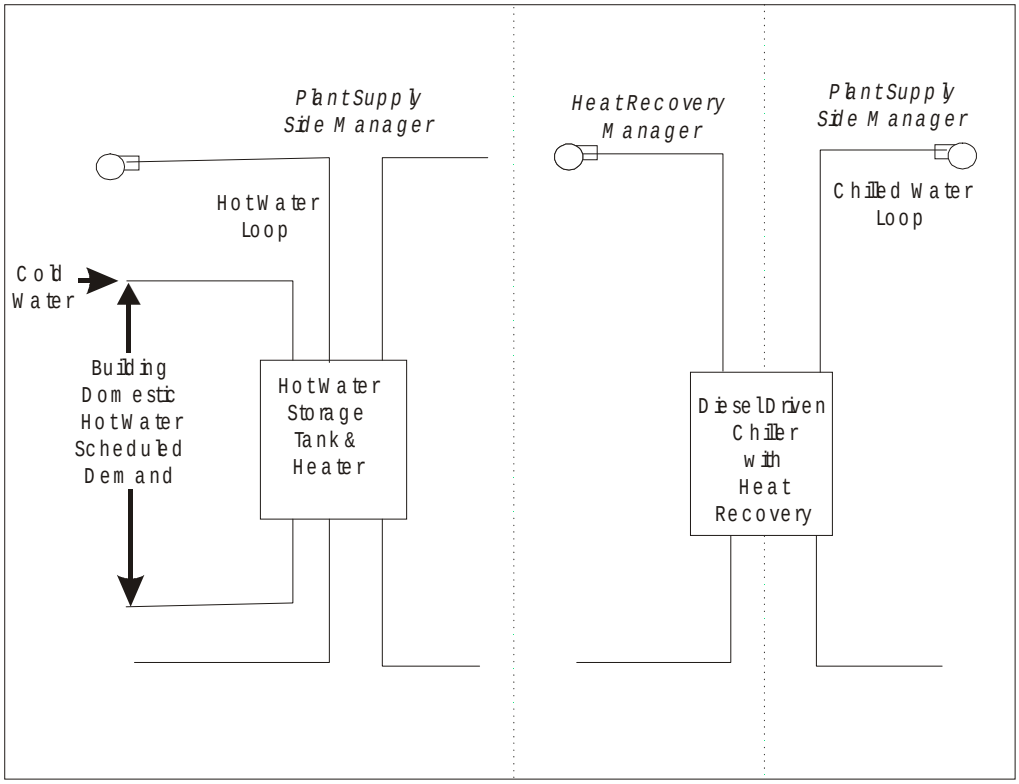

Figure 42. Heat Recovery Loop Schematic

Field: Heat Recovery Loop Name

This alpha field contains the identifying name for the heat recovery loop.

Field: Fluid Type

This alpha field must be a keyword selected from the list of available fluids for an EnergyPlus plant loop. Note from the IDD specification that the only currently acceptable one is “Water”.

Field: Maximum Loop Temperature

This numeric field contains the maximum allowable temperature in Celsius for this loop. Not Implemented in current version.

Field: Heat Recovery Pump Efficiency

This numeric field contains the pump efficiency specified as a fraction (0.0-1.0).

Field: Loop head

This numeric field contains the total pumping pressure head. This input is used to calculate pumping power on the heat recovery loop.

Field: Water heater/storage tank Name

This alpha field contains the identifying name for the water heater/ storage tank.

Field: Water heater/storage Inlet Node Name

This alpha field contains the identifying name given to the Water heater/storage Inlet Node.

Field: Water heater/storage Outlet Node Name

This alpha field contains the identifying name given to the Water heater/storage Outlet Node.

FieldSet: (Name, Inlet, Outlet) up to 5

Up to five heat recovery loop components may be specified by providing the name of the component and the inlet and outlet nodes.

Heat Recovery Loop Component Name

This alpha field contains the identifying name for the Heat Recovery Loop Component.

Field: Heat Recovery Loop Component Inlet Node Name

This alpha field contains the identifying name given to the Heat Recovery Loop Component Inlet Node.

Field: Heat Recovery Loop Component Outlet Node Name

This alpha field contains the identifying name given to the Heat Recovery Loop Component Outlet Node.

```
HEAT RECOVERY LOOP,
  A1 , \field Heat Recovery Loop Name
  A2 , \field Fluid Type
       \type choice
       \key Water
  N1 , \field Maximum Loop Temperature
       \units C
  N2 , \field Heat Recovery Pump Efficiency
       \units dimensionless 0-1
  N3 , \field Loop head
       \units m
  A3, \field Water heater/storage tank Name
  A4, \field Water heater/storage Inlet Node Name
  A5, \field Water heater/storage Outlet Node Name
  A6, \field Heat Recovery Loop 1 Component Name
  A7, \field Heat Recovery Loop 1 Component Inlet Node Name
  A8, \field Heat Recovery Loop 1 Component Outlet Node Name
  A9, \field Heat Recovery Loop 2 Component Name
  A10, \field Heat Recovery Loop 2 Component Inlet Node Name
  A11, \field Heat Recovery Loop 2 Component Outlet Node Name
  A12, \field Heat Recovery Loop 3 Component Name
  A13, \field Heat Recovery Loop 3 Component Inlet Node Name
  A14, \field Heat Recovery Loop 3 Component Outlet Node Name
  A15, \field Heat Recovery Loop 4 Component Name
  A16, \field Heat Recovery Loop 4 Component Inlet Node Name
  A17, \field Heat Recovery Loop 4 Component Outlet Node Name
  A18, \field Heat Recovery Loop 5 Component Name
  A19, \field Heat Recovery Loop 5 Component Inlet Node Name
  A20; \field Heat Recovery Loop 5 Component Outlet Node Name
```

Group – Plant-Condenser Control

Operation Schemes (Plant and Condenser)

Plants and condenser loops must have some mechanism for controlling the operation of the loop and which equipment is available under what conditions. Since there may be multiple control schemes that are assigned various priorities associated with each loop, an overall operation scheme must be defined. The overall scheme consists of the object name, an identifying name that is referenced in the main plant or condenser loop statement, and a list of operation schemes. Each operation scheme must have the type of operation scheme, its

identifying name, and the schedule that defines its availability. Note that the order in which the individual operation schemes appear in this list defines its priority versus the others. The first scheme appearing in the list is given the highest priority, the second scheme has second highest priority, etc. In other words, if according to its schedule, the first operation scheme is available, then it is used by the simulation to define how the plant or condenser loop operates. If it is not available, the second operation scheme in the list is checked to see if it is available until the highest priority scheme that is also available is found.

Plant Operation Schemes

Field: PlantOperationSchemeName

This alpha field contains the identifying name given to the Plant Operation Scheme.

Field Set (Key, Name, Schedule) up to 8

Field: KEY--Control Scheme

This alpha field contains the keyword for the type of control scheme used. Currently, the only option is “LOAD RANGE BASED OPERATION”.

Field: Control Scheme Name

This alpha field contains the identifying name given to the control scheme.

Field: Control Scheme Schedule

This alpha field contains the schedule name for the control scheme. This schedule consists of weeks and days, with the days containing “0 or 1” for each hour of the day. This binary schedule (0 for off, 1 for on) determines if the control scheme is operating for that hour of day or not.

```
PLANT OPERATION SCHEMES,
       \memo List operation schemes in order of priority (lowest to highest )
       \memo Currently 'LOAD RANGE BASED OPERATION' is the only scheme available
  A1 , \field PlantOperationSchemeName
       \reference PlantOperationSchemes
  A2 , \field KEY--Control Scheme 1
       \type choice
       \key Load Range Based Operation
  A3 , \field Control Scheme Name 1
  A4 , \field Control Scheme Schedule 1
       \type object-list
       \object-list ScheduleNames
-- reduced for brevity --
  A23, \field KEY--Control Scheme 1
       \type choice
       \key Load Range Based Operation
  A24, \field Control Scheme Name 1
  A25; \field Control Scheme Schedule 1
       \type object-list
       \object-list ScheduleNames
```

An example of this statement in the IDF is:

```
PLANT OPERATION SCHEMES,CW Loop Operation,
        LOAD RANGE BASED OPERATION, Peak Operation, On Peak,
        LOAD RANGE BASED OPERATION, Off Peak Operation, Off Peak;
```

In this IDF example, “LOAD RANGE BASED OPERATION” is the type of control scheme. “Peak Operation” and “Off Peak Operation” are the names of two different load range based

controls defined separately (see below --). "On Peak" and "Off Peak" are schedules defined elsewhere in the input file.

As the note in the IDD for this syntax reveals, at the current time, EnergyPlus only has a "LOAD RANGE BASED OPERATION" type of control scheme implemented. Others will be added later. The load range based operation scheme has two statements associated with it: a main statement that defines the ranges that individual priority settings are valid and the lists of equipment that may be used for each range.

Condenser Operation Schemes

Field: CondenserOperationSchemeName

This alpha field contains the identifying name given to the Condenser Operation Scheme.

Field Set (Key, Name, Schedule) up to 8

Field: KEY--Control Scheme

This alpha field contains the keyword for the type of control scheme used. Currently, the only option is "LOAD RANGE BASED OPERATION".

Field: Control Scheme Name

This alpha field contains the identifying name given to the control scheme.

Field: Control Scheme Schedule

This alpha field contains the schedule name for the control scheme. This schedule consists of weeks and days, with the days containing "0 or 1" for each hour of the day. This binary schedule (0 for off, 1 for on) determines if the control scheme is operating for that hour of day or not.

```
CONDENSER OPERATION SCHEMES,
   !List operation schemes in order of priority (lowest to highest )
   !Currently 'LOAD RANGE BASED OPERATION' is the only scheme available
  A1 , \field CondenserOperationSchemeName
       \reference CondenserOperationSchemes
  A2 , \field KEY--Control Scheme 1
       \type choice
       \key Load Range Based Operation
  A3 , \field Control Scheme Name 1
  A4 , \field Control Scheme Schedule 1
       \type object-list
       \object-list ScheduleNames
-- reduced for brevity --
  A23, \field KEY--Control Scheme 1
       \type choice
       \key Load Range Based Operation
  A24, \field Control Scheme Name 1
  A25; \field Control Scheme Schedule 1
       \type object-list
       \object-list ScheduleNames
```

An example of this statement in the IDF is:

```
    CONDENSER OPERATION SCHEMES,Tower Loop Operation,
        LOAD RANGE BASED OPERATION, Year Round Tower Operation, ON;
```

Load Range Based Operation

The "LOAD RANGE BASED OPERATION" statement defines the different ranges and which equipment list is valid for each range. After the keyword and the identifying name, a series of

data trios is expected. In each trio, there is a lower limit for the load range, an upper limit for the load range, and a name that links to an equipment availability list (the "LOAD RANGE EQUIPMENT LIST").

Field: Name

This alpha field contains the identifying name for the control scheme.

Field Set (Lower limit, Upper Limit, Equip List name) up to 10

Field: Load Range Lower Limit

This numeric field contains the lower demand range (W) for the equipment list. If demand is below this value, then this equipment list will not turn on to meet the demand.

Field: Load Range Upper Limit

This numeric field contains the upper demand range (W) for the equipment list. If demand is above this value, then this equipment list will not turn on to meet the demand.

Field: Priority Control Equip List Name

This alpha field contains the identifying name for the Equipment List. This field ties to the Load Range Equipment List input structure, which must also be defined.

Below is the data description for the LOAD RANGE BASED OPERATION statement.

```
LOAD RANGE BASED OPERATION,
    \memo Warning -- all cooling range limits are entered as negative numbers.
   A1 ,\field Name
   N1 ,\field Load Range Lower Limit 1
       \type real
       \units W
   N2 ,\field Load Range Upper Limit 1
       \type real
       \units W
   A2 ,\field Priority Control Equip List Name 1
   N3 ,\field Load Range Lower Limit 2
       \type real
       \units W
   N4 ,\field Load Range Upper Limit 2
       \type real
       \units W
   A3 ,\field Priority Control Equip List Name 2
--reduced for brevity -
   N19,\field Load Range Lower Limit 10
       \type real
       \units W
   N20,\field Load Range Upper Limit 10
       \type real
       \units W
   A11;\field Priority Control Equip List Name 10
```

An example of this statement in an IDF is:

```
LOAD RANGE BASED OPERATION, Peak Operation,
        0,-7000,   Chiller Plant,
        -7000,-24500,   Chiller Plant and Purchased,
        -24500,-500000, Purchased Only;
```

Note that for cooling equipment loads, capacities, and ranges are all specified as *negative numbers*. This particular load based operation scheme has three different ranges. "Chiller Plant", "Chiller Plant and Purchased", and "Purchased Only" are names which link to various "LOAD RANGE EQUIPMENT LIST" inputs as described below. Gaps may be left in the operation scheme, but to operate equipment over the entire range, the upper limit of a given range must equal the lower limit of the next range as shown in the example.

Load Range Equipment List

A LOAD RANGE EQUIPMENT LIST statement is used to define the equipment that will be available for a particular load range and the priority in which such equipment will be used. Each statement contains the object name, an identifying name (links the definition back to the "LOAD RANGE BASED OPERATION" statement), and a variable length of data pairs. These pairs refer to a plant equipment type and an identifying name. The type in this list of pairs must correspond to a valid plant object as described in the next subsection.

Field: Equip List Name

This alpha field contains the identifying name for the Equipment List.

Field Set (Key, Name) up to 10

Remember the order of equipment on this list determines operation priority. Equipment on the list first will try to meet demand first. These fields tie to the Equipment Definition input structure, which must also be defined.

Field: KEY--Plant Equip

This alpha field contains the keyword for the type of equipment in operation. Example: (WATERHEATER:SIMPLE, CHILLER:ELECTRIC, PURCHASED:CHILLED WATER). The full list of allowable plant equipment is again found as the objects in the section (Group – Plant-Condenser Equipment).

Field: Equip Name

This alpha field contains the identifying name for the equipment in operation. This distinguishes between two different pieces of equipment of the same type.

```
LOAD RANGE EQUIPMENT LIST,
       \memo List plant equip in order of operating priority
  A1 , \field Equip List Name
  A2 , \field KEY--Plant Equip 1
  A3 , \field Equip Name 1
  A4 , \field KEY--Plant Equip 2
  A5 , \field Equip Name 2
  A6 , \field KEY--Plant Equip 3
  A7 , \field Equip Name 3
  A8 , \field KEY--Plant Equip 4
  A9 , \field Equip Name 4
  A10, \field KEY--Plant Equip 5
  A11, \field Equip Name 5
  A12, \field KEY--Plant Equip 6
  A13, \field Equip Name 6
  A14, \field KEY--Plant Equip 7
  A15, \field Equip Name 7
  A16, \field KEY--Plant Equip 8
  A17, \field Equip Name 8
  A18, \field KEY--Plant Equip 9
  A19, \field Equip Name 9
  A20, \field KEY--Plant Equip 10
  A21; \field Equip Name 10
```

An example of this statement in an IDF is:

```
LOAD RANGE EQUIPMENT LIST, Chiller Plant and Purchased,
        CHILLER:ELECTRIC, Big Chiller,
        PURCHASED:CHILLED WATER, Purchased Cooling;
```

Note that this list is the middle range defined in the LOAD RANGE BASED OPERATION statement named "Peak Operation" above. This defines the equipment available when the load encountered by the plant (chiller water demand, for example) is between –7000 W and –24500 W. EnergyPlus will run the "Big Chiller" first up to its capacity and then attempt to

meet the remaining load (while in that range) with the next piece of equipment (in this case, “Purchased:Cooling”) in the list.

Group – Plant-Condenser Equipment

Equipment Types (Plant and Condenser)

In each LOAD RANGE EQUIPMENT LIST described using the above syntax, various equipment types and names must be given. Each type-name pair must then have a corresponding equipment definition. This subsection lists the various equipment types that are available and examples from an IDF. Where appropriate, notes and comments on the input structure are provided.

Generic Chiller Outputs

Many output variable names are common across all chiller types. These generic chiller output names all begin with the word "Chiller". Certain chiller types have additional output variables which are specific to that type of chiller. Specific chiller output names begin with the chiller type, for example, "Gas Absorption Chiller Heating Energy [J]." Chiller energy use is added to the appropriate plant-level meters as a cooling end-use.

```
HVAC,Average,Chiller Electric Power [W]
HVAC,Sum,Chiller Electric Consumption [J]
Zone,Meter,Electricity:Plant [J]
Zone,Meter,Cooling:Electricity [J]

HVAC,Average,Chiller Evap Heat Trans Rate [W]
HVAC,Sum,Chiller Evap Heat Trans [J]
Zone,Meter,EnergyTransfer:Plant [J]
Zone,Meter,Chillers:EnergyTransfer [J]
HVAC,Average,Chiller Evap Water Inlet Temp [C]
HVAC,Average,Chiller Evap Water Outlet Temp [C]
HVAC,Average,Chiller Evap Water Mass Flow Rate [kg/s]

HVAC,Average,Chiller Cond Heat Trans Rate [W]
HVAC,Sum,Chiller Cond Heat Trans [J]
Zone,Meter,HeatRejection:EnergyTransfer [J]

The following output is applicable only for air-cooled chillers
HVAC,Average,Chiller Cond Air Inlet Temp [C]

The following three outputs are only available for water-cooled chillers
HVAC,Average,Chiller Cond Water Inlet Temp [C]
HVAC,Average,Chiller Cond Water Outlet Temp [C]
HVAC,Average,Chiller Cond Water Mass Flow Rate [kg/s]

HVAC,Average,Chiller Shaft Power [W]
HVAC,Sum,Chiller Shaft Energy [J]

Zone,Meter,HeatRecovery:EnergyTransfer [J]
HVAC,Average,Chiller Lube Heat Recovery Rate [W]
HVAC,Sum,Chiller Lube Heat Recovery [J]
HVAC,Average,Chiller Jacket Heat Recovery Rate [W]
HVAC,Sum,Chiller Jacket Heat Recovery [J]
HVAC,Average,Chiller Exhaust Heat Recovery Rate [W]
HVAC,Sum,Chiller Exhaust Heat Recovery [J]
HVAC,Average,Chiller Total Heat Recovery Rate [W]
HVAC,Sum,Chiller Total Heat Recovery [J]
HVAC,Average,Chiller Exhaust Stack Temp[C]
```

```
HVAC,Average,Chiller Heat Recovery Inlet Temp [C]
HVAC,Average,Chiller Heat Recovery Outlet Temp [C]
HVAC,Average,Chiller Heat Recovery Mass Flow Rate [kg/s]
```

```
  The following blocks of outputs are for steam and fuel-driven chillers
HVAC,Average,Chiller Gas Consumption Rate [W]
HVAC,Sum,Chiller Gas Consumption [J]
Zone,Meter,Gas:Plant [J]
Zone,Meter,Cooling:Gas [J]
HVAC,Average,Chiller Gas Mass Flow Rate [kg/s]
HVAC,Sum,Chiller Gas Mass Consumption [kg]

HVAC,Average,Chiller Steam Consumption Rate [W]
HVAC,Sum,Chiller Steam Consumption [J]
Zone,Meter,Steam:Plant [J]
Zone,Meter,Cooling:Steam [J]
HVAC,Average,Chiller Steam Mass Flow Rate [kg/s]

HVAC,Average,Chiller Propane Consumption Rate [W]
HVAC,Sum,Chiller Propane Consumption [J]
Zone,Meter,Propane:Plant [J]
Zone,Meter,Cooling:Propane [J]
HVAC,Average,Chiller Propane Mass Flow Rate [kg/s]

HVAC,Average,Chiller Diesel Consumption Rate [W]
HVAC,Sum,Chiller Diesel Consumption [J]
Zone,Meter,Diesel:Plant [J]
Zone,Meter,Cooling:Diesel [J]
HVAC,Average,Chiller Diesel Mass Flow Rate [kg/s]

HVAC,Average,Chiller Gasoline Consumption Rate [W]
HVAC,Sum,Chiller Gasoline Consumption [J]
Zone,Meter,Gasoline:Plant [J]
Zone,Meter,Cooling:Gasoline [J]
HVAC,Average,Chiller Gasoline Mass Flow Rate [kg/s]

HVAC,Average,Chiller FuelOil#1 Consumption Rate [W]
HVAC,Sum,Chiller FuelOil#1 Consumption [J]
Zone,Meter,FuelOil#1:Plant [J]
Zone,Meter,Cooling:FuelOil#1 [J]
HVAC,Average,Chiller FuelOil#1 Mass Flow Rate [kg/s]

HVAC,Average,Chiller FuelOil#2 Consumption Rate [W]
HVAC,Sum,Chiller FuelOil#2 Consumption [J]
Zone,Meter,FuelOil#2:Plant [J]
Zone,Meter,Cooling:FuelOil#2 [J]
HVAC,Average,Chiller FuelOil#2 Mass Flow Rate [kg/s]
```

Chiller Electric Power [W]

Chiller Electric Consumption [J]

These outputs are the electric power input to the chiller. In the case of steam or fuel-powered chillers, this repesents the internal chiller pumps and other electric power consumption. Consumption is metered on Cooling:Electricity, Electricity:Plant, and Electricity:Facility.

Chiller Evap Heat Trans Rate [W]

Chiller Evap Heat Trans [J]

These outputs are the evaporator heat transfer which is the cooling delivered by the chiller. Chiller Evap Heat Trans is metered on Chillers:EnergyTransfer, EnergyTransfer:Plant, and EnergyTransfer:Facility.

Chiller Evap Water Inlet Temp [C]

Chiller Evap Water Outlet Temp [C]

Chiller Evap Water Mass Flow Rate [kg/s]

These outputs are the evaporator (chilled water) inlet and outlet temperatures and flow rate.

Chiller Cond Heat Trans Rate [W]

Chiller Cond Heat Trans [J]

These outputs are the condenser heat transfer which is the heat rejected from the chiller to either a condenser water loop or through an air-cooled condenser. Chiller Cond Heat Trans is metered on HeatRejection:EnergyTransfer, EnergyTransfer:Plant, and EnergyTransfer:Facility.

Chiller Cond Air Inlet Temp [C]

This output is the condenser (heat rejection) inlet temperature for air-cooled chillers.

Chiller Cond Water Inlet Temp [C]

Chiller Cond Water Outlet Temp [C]

Chiller Cond Water Mass Flow Rate [kg/s]

These outputs are the condenser (heat rejection) inlet and outlet temperatures and flow rate for water-cooled chillers.

Chiller Shaft Power [W]

Chiller Shaft Energy [J]

For engine-driven and turbine-driven chillers, these outputs are the shaft power produced by the prime mover and transferred to the chiller compressor.

Chiller Lube Heat Recovery Rate [W]

Chiller Lube Heat Recovery [J]

Chiller Jacket Heat Recovery Rate [W]

Chiller Jacket Heat Recovery [J]

Chiller Exhaust Heat Recovery Rate [W]

Chiller Exhaust Heat Recovery [J]

Chiller Total Heat Recovery Rate [W]

Chiller Total Heat Recovery [J]

For chillers with heat recovery, such as engine-driven chillers, these outputs are the components of recoverable energy available. For a given chiller type, one or more of the following components may be applicable: Lube (engine lubricant), Jacket (engine coolant), Exhaust (engine exhaust), and Total. Chiller Lube Heat Recovery, Chiller Jacket Heat Recovery, and Chiller Exhaust Heat Recovery are metered on HeatRecovery:EnergyTransfer, EnergyTransfer:Plant, and EnergyTransfer:Facility.

Chiller Exhaust Stack Temp [C]

This is the exhaust temperature leaving an engine chiller.

Chiller Heat Recovery Inlet Temp [C]

Chiller Heat Recovery Outlet Temp [C]

Chiller Heat Recovery Mass Flow Rate [kg/s]

These outputs are the heat recovery inlet and outlet temperatures and flow rate for chillers with heat recovery such as engine-driven and gas turbine chillers.

Chiller <FuelType> Consumption Rate [W]

Chiller <FuelType> Consumption [J]

Chiller <FuelType> Mass Flow Rate [kg/s]

Chiller Gas Mass Consumption [kg] *(Gas Turbine Chiller only)*

These outputs are the steam or fuel input for steam or fuel-fired chillers. Valid fuel types depend on the type of chiller. <FuelType> may be one of: Gas (natural gas), Steam, Propane, Diesel, Gasoline, FuelOil#1, and FuelOil#2. Consumption is metered on Cooling:<FuelType>, <FuelType>:Plant, and <FuelType>:Facility.

Chiller: Absorption

Field: Chiller Name

This alpha field contains the identifying name for the absorption chiller.

Field: Nominal Capacity

This numeric field contains the nominal cooling capability of the chiller in Watts.

Field: Nominal Pumping Power

This numeric field contains the nominal pumping power of the absorber in Watts.

Field: Plant_Side_Inlet_Node

This alpha field contains the identifying name for the absorption chiller plant side inlet node.

Field: Plant_Side_Outlet_Node

This alpha field contains the identifying name for the absorption chiller plant side outlet node.

Field: Condenser_Side_Inlet_Node

This alpha field contains the identifying name for the absorption chiller condenser side inlet node.

Field: Condenser_Side_Outlet_Node

This alpha field contains the identifying name given to the Heat Recovery Loop Component Outlet Node.

Field: Minimum Part Load Ratio

This numeric field contains the absorption chiller's minimum part load ratio. The expected range is between 0 and 1. The minimum part load is not the load where the machine shuts off, but where the amount of power remains constant to produce smaller loads than this fraction.

Field: Maximum Part Load Ratio

This numeric field contains the absorption chiller's maximum part load ratio. This value may exceed 1, but the normal range is between 0 and 1.1.

Field: Opt Part Load Ratio

This numeric field contains the absorption chiller's optimum part load ratio. This is the part load ratio at which the chiller performs at its maximum COP.

Field: Temp Design Condenser Inlet

This numeric field contains the absorption chiller's condenser inlet design temperature in Celsius.

Field: Design Evaporator Volumetric Water Flow Rate

For variable volume chiller this is the maximum flow and for constant flow chiller this is the design flow rate. The units are in cubic meters per second.

Field: Design Condenser Volumetric Water Flow Rate

This numeric field contains the absorption chiller's design condenser water flow rate in cubic meters per second.

Steam Use Part Load Ratio Curve

The Steam Use Part Load Ratio Curve is a quadratic equation that determines the Ratio of the steam load on the absorber to the demand on the chiller. The defining equation is:

$$SteamInputRatio = \frac{C1}{PLR} + C2 + C3 * PLR$$

$$ElectricInputRatio = C1 + C2 * PLR + C3 * PLR^2$$

The following three fields contain the coefficients for the equation.

Field: Coefficient1 of the steam use part load ratio curve

C1 in the SteamInput Ratio Curve. This value is obtained by fitting manufacturers' performance data to the curve.

Field: Coefficient2 of the steam use part load ratio curve

C2 in the SteamInput Ratio Curve. This value is obtained by fitting manufacturers' performance data to the curve.

Field: Coefficient3 of the steam use part load ratio curve

C3 in the SteamInput Ratio Curve. This value is obtained by fitting manufacturers' performance data to the curve.

Pump Electric Use Part Load Ratio Curve

The Pump Electric Use Part Load Ratio Curve is a quadratic equation that determines the Ratio of the actual absorber pumping power to the nominal pumping power. The defining equation is:

$$ElectricInputRatio = C1 + C2 * PLR + C3 * PLR^2$$

The following three fields contain the coefficients for the equation.

Field: Coefficient1 of the pump electric use part load ratio curve

C1 in the Pump Electric Use Part Load Ratio Curve. This value is obtained by fitting manufacturers' performance data to the curve.

Field: Coefficient2 of the pump electric part load ratio curve

C2 in the Pump Electric Use Part Load Ratio Curve. This value is obtained by fitting manufacturers' performance data to the curve.

Field: Coefficient3 of the pump electric use part load ratio curve

C3 in the Pump Electric Use Part Load Ratio Curve. This value is obtained by fitting manufacturers' performance data to the curve.

Field: Temp Lower Limit Evaporator Outlet

This numeric field contains the lower limit for the evaporator outlet temperature. This temperature acts as a cut off for heat transfer in the evaporator, so that the fluid doesn't get too cold.

Field: Absorber Steam Inlet Node

This alpha field contains the identifying name given to the Absorber Steam Inlet Node. Steam loops have not been implemented.

Field: Absorber Steam Outlet Node

This alpha field contains the identifying name given to the Absorber Steam Outlet Node. Steam loops have not been implemented.

Field: Chiller Flow Mode

This alpha field determines if the Chiller is either a Variable or Constant Flow Chiller Simulation. The default, if not specified, is Variable Flow.

```
CHILLER:ABSORPTION,
   \min-fields 23
       \memo This chiller model is the empirical model from the Building Loads
       \memo and System Thermodynamics (BLAST) program.  Chiller performance
       \memo curves are generated by fitting catalog data to third order
       \memo polynomial equations.  Two sets of coefficients are required.
  A1 , \field Chiller Name
       \required-field
  N1 , \field Nominal Capacity
       \units W
       \required-field
  N2 , \field Nominal Pumping Power
       \units W
       \required-field
  A2 , \field Plant_Side_Inlet_Node
       \required-field
  A3 , \field Plant_Side_Outlet_Node
       \required-field
  A4 , \field Condenser_Side_Inlet_Node
       \required-field
  A5 , \field Condenser_Side_Outlet_Node
       \required-field
  N3 , \field Minimum Part Load Ratio
       \minimum 0.0
  N4 , \field Maximum Part Load Ratio
       \minimum 0.0
  N5 , \field Opt Part Load Ratio
       \minimum 0.0
  N6 , \field Temp Design Condenser Inlet
       \units C
  N7 , \field Design Evaporator Volumetric Water Flow Rate
       \note  For variable volume this is the max flow & for constant flow this is the flow.
       \units m3/s
  N8, \field Design Condenser Volumetric Water Flow Rate
       \units m3/s
       \Note  The steam use coefficients below specify the
       \Note  steam use as a fraction of chiller operating capacity
  N9, \field Coefficient1 of the steam use part load ratio curve
  N10, \field Coefficient2 of the steam use part load ratio curve
  N11, \field Coefficient3 of the steam use part load ratio curve
```

```
      \Note  The pump electric use coefficients below specify the
      \Note  pumping power as a fraction of Nominal pumping power
N12, \field Coefficient1 of the pump electric use part load ratio curve
N13, \field Coefficient2 of the pump electric part load ratio curve
N14, \field Coefficient3 of the pump electric use part load ratio curve
N15, \field Temp Lower Limit Evaporator Outlet
      \units C
A6 , \field Absorber Steam Inlet Node
A7 , \field Absorber Steam Outlet Node
A8 ; \field Chiller Flow Mode
      \note Sets this Chiller to either a Variable or Constant Flow Simulation
      \type choice
      \key ConstantFlow
      \key VariableFlow
      \default VariableFlow
```

Absorption Chiller Outputs

```
HVAC,Average,Chiller Electric Power [W]
HVAC,Sum,Chiller Electric Consumption [J]
Zone,Meter,Electricity:Plant [J]
Zone,Meter,Cooling:Electricity [J]

HVAC,Average,Chiller Evap Heat Trans Rate [W]
HVAC,Sum,Chiller Evap Heat Trans [J]
Zone,Meter,EnergyTransfer:Plant [J]
Zone,Meter,Chillers:EnergyTransfer [J]
HVAC,Average,Chiller Evap Water Inlet Temp [C]
HVAC,Average,Chiller Evap Water Outlet Temp [C]
HVAC,Average,Chiller Evap Water Mass Flow Rate [kg/s]

HVAC,Average,Chiller Cond Heat Trans Rate [W]
HVAC,Sum,Chiller Cond Heat Trans [J]
Zone,Meter,HeatRejection:EnergyTransfer [J]
HVAC,Average,Chiller Cond Water Inlet Temp [C]
HVAC,Average,Chiller Cond Water Outlet Temp [C]
HVAC,Average,Chiller Cond Water Mass Flow Rate [kg/s]

HVAC,Average,Chiller Steam Consumption Rate [W]
HVAC,Sum,Chiller Steam Consumption [J]
Zone,Meter,Steam:Plant [J]
Zone,Meter,Cooling:Steam [J]
HVAC,Average,Chiller Steam Mass Flow Rate [kg/s]
```

These chiller output variables are defined above under "Generic Chiller Outputs."

Chiller:CONST COP

This chiller model is based on a simple, constant COP simulation of the chiller. In this case, performance does not vary with chilled water temperature or condenser conditions.

Such a model is useful when the user does not have access to detailed performance data.

```
CHILLER:CONST COP,
  \min-fields 11
       \memo This constant COP chiller model provides a means of quickly specifying a
       \memo Chiller where performance data is not available.
  A1 , \field Chiller Name
       \required-field
  N1 , \field Nominal Capacity
       \units W
       \required-field
  N2 , \field COP
       \required-field
  N3 , \field Design Evaporator Volumetric Water Flow Rate
       \note  For variable volume this is the max flow & for constant flow this is the flow.
       \units m3/s
  N4 , \field Design Condenser Volumetric Water Flow Rate
       \units m3/s
  A2 , \field Plant_Side_Inlet_Node
       \required-field
  A3 , \field Plant_Side_Outlet_Node
       \required-field
  A4 , \field Condenser_Side_Inlet_Node
       \required-field
  A5 , \field Condenser_Side_Outlet_Node
       \required-field
  A6 , \field Condenser Type
       \type choice
       \key AIR COOLED
       \key WATER COOLED
       \key EVAP COOLED
       \default AIR COOLED
  A7;  \field Chiller Flow Mode
       \note Sets this Chiller to either a Variable or Constant Flow Simulation
       \type choice
       \key ConstantFlow
       \key VariableFlow
       \default VariableFlow
```

Field: Chiller Name

This alpha field contains the identifying name for the constant COP chiller.

Field: Nominal Capacity

This numeric field contains the nominal cooling capability of the chiller in Watts.

Field: COP

This numeric field contains the Chiller's coefficient of performance.

Field: Design Evaporator Volumetric Water Flow Rate

For variable volume chiller this is the maximum flow and for constant flow chiller this is the design flow rate. The units are in cubic meters per second.

Field: Design Condenser Volumetric Water Flow Rate

This numeric field contains the electric chiller's design condenser water flow rate in cubic meters per second.

Field: Plant_Side_Inlet_Node

This alpha field contains the identifying name for the constant COP chiller plant side inlet node.

Field: Plant_Side_Outlet_Node

This alpha field contains the identifying name for the constant COP chiller plant side outlet node.

Field: Condenser_Side_Inlet_Node

This alpha field contains the identifying name for the constant COP chiller condenser side inlet node.

Field: Condenser_Side_Outlet_Node

This alpha field contains the identifying name for the constant COP chiller condenser side outlet node.

Field: Condenser Type

This alpha field determines what type of condenser will be modeled with this chiller. The 3 type of condensers are AIR COOLED, WATER COOLED, and EVAP COOLED with the default being AIR COOLED if not specified. AIR COOLED and EVAP COOLED do not require a Condenser Loop to be specified, where the WATER COOLED option requires the full specification of the Condenser Loop and its associated equipment.

Field: Chiller Flow Mode

This alpha field determines if the Chiller is either a Variable or Constant Flow Chiller Simulation. The default, if not specified, is Variable Flow.

An example of this statement in an IDF is:

```
CHILLER:CONST COP, Little Chiller,
    25000,
    2.5,
    0.0011,            ! Evaporator Volume Flow Rate [m3/s]
    0.0011,            ! Condenser Volume Flow Rate [m3/s]
    Little Chiller Inlet Node, Little Chiller Outlet Node,
    Little Chiller Condenser Inlet Node, Little Chiller Condenser Outlet Node,
    Water Cooled,
    VariableFlow;
```

Constant COP Chiller Outputs

```
HVAC,Average,Chiller Electric Power [W]
HVAC,Sum,Chiller Electric Consumption [J]
Zone,Meter,Electricity:Plant [J]
Zone,Meter,Cooling:Electricity [J]

HVAC,Average,Chiller Evap Heat Trans Rate [W]
HVAC,Sum,Chiller Evap Heat Trans [J]
Zone,Meter,EnergyTransfer:Plant [J]
Zone,Meter,Chillers:EnergyTransfer [J]
HVAC,Average,Chiller Evap Water Inlet Temp [C]
HVAC,Average,Chiller Evap Water Outlet Temp [C]
HVAC,Average,Chiller Evap Water Mass Flow Rate [kg/s]

HVAC,Average,Chiller Cond Heat Trans Rate [W]
HVAC,Sum,Chiller Cond Heat Trans [J]
Zone,Meter,HeatRejection:EnergyTransfer [J]
Air-cooled:
HVAC,Average,Chiller Cond Air Inlet Temp [C]
Water-cooled:
HVAC,Average,Chiller Cond Water Inlet Temp [C]
HVAC,Average,Chiller Cond Water Outlet Temp [C]
HVAC,Average,Chiller Cond Water Mass Flow Rate [kg/s]
```

These chiller output variables are defined above under "Generic Chiller Outputs."

Chiller:Electric

This chiller model is the empirical model from the Building Loads and System Thermodynamics (BLAST) program. Capacity, power, and full load are each defined by a set of performance curves (quadratics). Chiller performance curves are generated by fitting catalog data to third order polynomial equations.

Field: Chiller Name

This alpha field contains the identifying name for the electric chiller.

Field: Condenser Type

This alpha field determines what type of condenser will be modeled with this chiller. The 3 type of condensers are AIR COOLED, WATER COOLED, and EVAP COOLED with the default being AIR COOLED if not specified. AIR COOLED and EVAP COOLED do not require a Condenser Loop to be specified, where the WATER COOLED option requires the full specification of the Condenser Loop and its associated equipment.

Field: Nominal Capacity

This numeric field contains the nominal cooling capability of the chiller in Watts.

Field: COP

This numeric field contains the chiller's coefficient of performance. For a water-cooled chiller, this number does not include energy use due to condenser pumps and/or fans. For an air-cooled chiller, this number includes condenser fan power.

Field: Plant_Side_Inlet_Node

This alpha field contains the identifying name for the electric chiller plant side inlet node.

Field: Plant_Side_Outlet_Node

This alpha field contains the identifying name for the electric chiller plant side outlet node.

Field: Condenser_Side_Inlet_Node

This alpha field contains the identifying name for the electric chiller condenser side inlet node. Both water- and air-cooled chillers require this field. However, in the case of an air-cooled chiller, no condenser (water) loop is specified.

Field: Condenser_Side_Outlet_Node

This alpha field contains the identifying name for the electric chiller condenser side outlet node. Both water- and air-cooled chillers require this field. However, in the case of an air-cooled chiller, no condenser (water) loop is specified.

Field: Minimum Part Load Ratio

This numeric field contains the electric chiller's minimum part load ratio. The expected range is between 0 and 1. . The minimum part load is not the load where the machine shuts off, but where the amount of power remains constant to produce smaller loads than this fraction.

Field: Maximum Part Load Ratio

This numeric field contains the electric chiller's maximum part load ratio. This value may exceed 1, but the normal range is between 0 and 1.1.

Field: Opt Part Load Ratio

This numeric field contains the electric chiller's optimum part load ratio. This is the part load ratio at which the chiller performs at its maximum COP.

Field: Temp Design Condenser Inlet

This numeric field contains the electric chiller's condenser inlet design temperature in Celsius.

Field: Temp Rise Coefficient

This numeric field contains the electric chiller's temperature rise coefficient which is defined as the ratio of the required change in condenser water temperature to a given change in chilled water temperature, which maintains the capacity at the nominal value.. This is calculated as the following ratio:

$$\frac{TCL_{required} - TCL_{rated}}{TEL_{required} - TEL_{rated}}$$

where:

$TCL_{requiredl}$ = Required leaving condenser water outlet temperature to maintain rated capacity

TCL_{rated} = Rated leaving condenser water outlet temperature at rated capacity

$TEL_{required}$ = Required leaving evaporator water outlet temperature to maintain rated capacity

TEL_{rated} = Rated leaving evaporator water outlet temperature at rated capacity

Field: Temp Design Evaporator Outlet

This numeric field contains the electric chiller's evaporator outlet design temperature in Celsius.

Field: Design Evaporator Volumetric Water Flow Rate

For variable volume chiller this is the maximum flow and for constant flow chiller this is the design flow rate. The units are in cubic meters per second.

Field: Design Condenser Volumetric Water Flow Rate

This numeric field contains the electric chiller's design condenser water flow rate in cubic meters per second. For an air-cooled chiller, any number (> 0.0) is a valid entry as this entry is not used within the program when modeling the air-cooled electric chiller.

Capacity Ratio Curve

The Capacity Ratio Curve is a quadratic equation that determines the Ratio of Available Capacity to Nominal Capacity. The defining equation is:

$$AvailToNominalCapacityRatio = C_1 + C_2\Delta_{temp} + C_3\Delta_{temp}^2$$

The following three fields contain the coefficients for the quadratic equation.

Field: Coefficient1 of the capacity ratio curve

This numeric field contains the first coefficient for the capacity ratio curve.

Field: Coefficient2 of the capacity ratio curve

This numeric field contains the second coefficient for the capacity ratio curve.

Field: Coefficient3 of the capacity ratio curve

This numeric field contains the third coefficient for the capacity ratio curve.

Power Ratio Curve

The Power Ratio Curve is a quadratic equation that determines the Ratio of Full Load to Power. The defining equation is:

$$FullLoadtoPowerRatio = C_1 + C_2 AvailToNominalCapRatio + C_3 AvailToNominalCapRatio^2$$

The following three fields contain the coefficients for the quadratic equation.

Field: Coefficient1 of the power ratio curve

This numeric field contains the first coefficient for the power ratio curve.

Field: Coefficient2 of the power ratio curve

This numeric field contains the second coefficient for the power ratio curve.

Field: Coefficient3 of the power ratio curve

This numeric field contains the third coefficient for the power ratio curve.

Full Load Ratio Curve

The Full Load Ratio Curve is a quadratic equation that determines the fraction of full load power. The defining equation is:

$$FracFullLoadPower = C_1 + C_2 PartLoadRatio + C_3 PartLoadRatio^2$$

The following three fields contain the coefficients for the quadratic equation.

Field: Coefficient1 of the full load ratio curve

This numeric field contains the first coefficient for the full load ratio curve.

Field: Coefficient2 of the full load ratio curve

This numeric field contains the second coefficient for the full load ratio curve.

Field: Coefficient3 of the full load ratio curve

This numeric field contains the third coefficient for the full load ratio curve.

Field: Temp Lower Limit Evaporator Outlet

This numeric field contains the lower limit for the evaporator outlet temperature. This temperature acts as a cut off for heat transfer in the evaporator, so that the fluid doesn't get too cold.

Field: Chiller Flow Mode

This alpha field determines if the Chiller is either a Variable or Constant Flow Chiller Simulation. The default, if not specified, is Variable Flow.

```
CHILLER:ELECTRIC,
    \min-fields 27
       \memo This chiller model is the empirical model from the Building Loads
       \memo and System Thermodynamics (BLAST) program.  Chiller performance
       \memo curves are generated by fitting catalog data to third order
       \memo polynomial equations.  Three sets of coefficients are required.
  A1 , \field Chiller Name
       \required-field
  A2 , \field Condenser Type
          \type choice
          \key AIR COOLED
          \key WATER COOLED
          \key EVAP COOLED
          \default AIR COOLED
  N1 , \field Nominal Capacity
       \units W
       \required-field
  N2 , \field COP
       \required-field
  A3 , \field Plant_Side_Inlet_Node
       \required-field
  A4 , \field Plant_Side_Outlet_Node
       \required-field
  A5 , \field Condenser_Side_Inlet_Node
       \required-field
  A6 , \field Condenser_Side_Outlet_Node
       \required-field
```

```
N3 , \field Minimum Part Load Ratio
     \minimum 0.0
N4 , \field Maximum Part Load Ratio
     \minimum 0.0
N5 , \field Opt Part Load Ratio
     \minimum 0.0
N6 , \field Temp Design Condenser Inlet
     \units C
N7 , \field Temp Rise Coefficient
N8 , \field Temp Design Evaporator Outlet
     \units C
N9 , \field Design Evaporator Volumetric Water Flow Rate
     \note  For variable volume this is the max flow & for constant flow this is the flow.
     \units m3/s
N10, \field Design Condenser Volumetric Water Flow Rate
     \minimum> 0.0
N11, \field Coefficient1 of the capacity ratio curve
N12, \field Coefficient2 of the capacity ratio curve
N13, \field Coefficient3 of the capacity ratio curve
N14, \field Coefficient1 of the power ratio curve
N15, \field Coefficient2 of the power ratio curve
N16, \field Coefficient3 of the power ratio curve
N17, \field Coefficient1 of the full load ratio curve
N18, \field Coefficient2 of the full load ratio curve
N19, \field Coefficient3 of the full load ratio curve
N20, \field Temp Lower Limit Evaporator Outlet
     \units C
A7;  \field Chiller Flow Mode
     \note Sets this Chiller to either a Variable or Constant Flow Simulation
     \type choice
     \key ConstantFlow
     \key VariableFlow
     \default VariableFlow
```

An example of this statement in an IDF is:

```
CHILLER:ELECTRIC, Big Chiller,
    Water Cooled,
    45000,
    2.75,
    Big Chiller Inlet Node, Big Chiller Outlet Node,
    Big Chiller Condenser Inlet Node, Big Chiller Condenser Outlet Node,
    .15,
    1.0,
    .65,
    35.0,
    2.778,
    7.2222,
    .0011,
    .0005,
    0.9949, -0.045954, -0.0013543,
    2.333, -1.975, 0.6121,
    0.03303, 0.6852, 0.2818,
    5,
    VariableFlow;
```

An example of an Air Cooled Chiller:

```
CHILLER:ELECTRIC, Big Chiller,       ! Chiller Name
    AIR COOLED,                      ! Condenser Type
    100000,                          ! Nominal Capacity [W]
    2.58,                            ! COP
   Big Chiller Inlet Node, Big Chiller Outlet Node,
   Big Chiller Condenser Inlet Node, Big Chiller Condenser Outlet Node,
    .15,                             ! Minimum part load ratio [0-1]
    1.0,                             ! Maximum part load ratio [0-1.1]
    .65,                             ! Optimum part load ratio
    35.0,                            ! Condenser inlet design temp [C]
    2.778,                           ! Temperature rise coefficient
    6.67,                            ! Evaporator design outlet temp [C]
    0.0011,                          ! Evaporator Volume Flow Rate [m3/s]
    0.000000001,                     ! Design condenser volumetric water flow rate [m3/s]
    0.9949, -0.045954, -0.0013543,   ! Capacity ratio curve coefficients
    2.333, -1.975, 0.6121,           ! Power ratio curve coefficients
    0.03303, 0.6852, 0.2818,         ! Full load ratio curve coefficients
    5,                               ! Lower limit for evap outlet temp [C]
    VariableFlow;
```

Electric Chiller Outputs

```
HVAC,Average,Chiller Electric Power [W]
HVAC,Sum,Chiller Electric Consumption [J]
Zone,Meter,Electricity:Plant [J]
Zone,Meter,Cooling:Electricity [J]

HVAC,Average,Chiller Evap Heat Trans Rate [W]
HVAC,Sum,Chiller Evap Heat Trans [J]
Zone,Meter,EnergyTransfer:Plant [J]
Zone,Meter,Chillers:EnergyTransfer [J]
HVAC,Average,Chiller Evap Water Inlet Temp [C]
HVAC,Average,Chiller Evap Water Outlet Temp [C]
HVAC,Average,Chiller Evap Water Mass Flow Rate [kg/s]

HVAC,Average,Chiller Cond Heat Trans Rate [W]
HVAC,Sum,Chiller Cond Heat Trans [J]
Zone,Meter,HeatRejection:EnergyTransfer [J]
Air-cooled:
HVAC,Average,Chiller Cond Air Inlet Temp [C]
Water-cooled:
HVAC,Average,Chiller Cond Water Inlet Temp [C]
HVAC,Average,Chiller Cond Water Outlet Temp [C]
HVAC,Average,Chiller Cond Water Mass Flow Rate [kg/s]
```

These chiller output variables are defined above under "Generic Chiller Outputs."

Chiller:EngineDriven

Field: Chiller Name

This alpha field contains the identifying name for the engine driven chiller.

Field: Condenser Type

This alpha field determines what type of condenser will be modeled with this chiller. The 3 type of condensers are AIR COOLED, WATER COOLED, and EVAP COOLED with the default being AIR COOLED if not specified. AIR COOLED and EVAP COOLED do not require a Condenser Loop to be specified, where the WATER COOLED option requires the full specification of the Condenser Loop and its associated equipment.

Field: Nominal Capacity

This numeric field contains the nominal cooling capability of the chiller in Watts.

Field: COP

This numeric field contains the chiller's coefficient of performance. performance (COP).

Field: Plant_Side_Inlet_Node

This alpha field contains the identifying name for the chiller plant side inlet node.

Field: Plant_Side_Outlet_Node

This alpha field contains the identifying name for the chiller plant side outlet node.

Field: Condenser_Side_Inlet_Node

This alpha field contains the identifying name for the chiller condenser side inlet node.

Field: Condenser_Side_Outlet_Node

This alpha field contains the identifying name for the chiller condenser side outlet node.

Field: Minimum Part Load Ratio

This numeric field contains the chiller's minimum part load ratio. The expected range is between 0 and 1. . The minimum part load is not the load where the machine shuts off, but where the amount of power remains constant to produce smaller loads than this fraction.

Field: Maximum Part Load Ratio

This numeric field contains the chiller's maximum part load ratio. This value may exceed 1, but the normal range is between 0 and 1.1.

Field: Opt Part Load Ratio

This numeric field contains the chiller's optimum part load ratio. This is the part load ratio at which the chiller performs at its maximum COP.

Field: Temp Design Condenser Inlet

This numeric field contains the chiller's condenser inlet design temperature in Celsius.

Field: Temp Rise Coefficient

This numeric field contains the chiller's temperature rise coefficient which is defined as the ratio of the required change in condenser water temperature to a given change in chilled water temperature, which maintains the capacity at the nominal value.. This is calculated as the following ratio:

$$\frac{TCL_{required} - TCL_{rated}}{TEL_{required} - TEL_{rated}}$$

where:

$TCL_{requiredl}$ = Required leaving condenser water outlet temperature to maintain rated capacity

TCL_{rated} = Rated leaving condenser water outlet temperature at rated capacity

$TEL_{required}$ = Required leaving evaporator water outlet temperature to maintain rated capacity

TEL_{rated} = Rated leaving evaporator water outlet temperature at rated capacity

Field: Temp Design Evaporator Outlet

This numeric field contains the chiller's evaporator outlet design temperature in Celsius.

Field: Design Evaporator Volumetric Water Flow Rate

For variable volume chiller this is the maximum flow and for constant flow chiller this is the design flow rate. The units are in cubic meters per second.

Field: Design Condenser Volumetric Water Flow Rate

This numeric field contains the chiller's design condenser water flow rate in cubic meters per second.

Capacity Ratio Curve

The Capacity Ratio Curve is a quadratic equation that determines the Ratio of Available Capacity to Nominal Capacity. The defining equation is:

$$AvailToNominalCapacityRatio = C_1 + C_2\Delta_{temp} + C_3\Delta_{temp}^2$$

The following three fields contain the coefficients for the quadratic equation.

Field: Coefficient1 of the capacity ratio curve

This numeric field contains the first coefficient for the capacity ratio curve.

Field: Coefficient2 of the capacity ratio curve

This numeric field contains the second coefficient for the capacity ratio curve.

Field: Coefficient3 of the capacity ratio curve

This numeric field contains the third coefficient for the capacity ratio curve.

Power Ratio Curve

The Power Ratio Curve is a quadratic equation that determines the Ratio of Full Load to Power. The defining equation is:

$$FullLoadtoPowerRatio = C_1 + C_2 AvailToNominalCapRatio + C_3 AvailToNominalCapRatio^2$$

The following three fields contain the coefficients for the quadratic equation.

Field: Coefficient1 of the power ratio curve

This numeric field contains the first coefficient for the power ratio curve.

Field: Coefficient2 of the power ratio curve

This numeric field contains the second coefficient for the power ratio curve.

Field: Coefficient3 of the power ratio curve

This numeric field contains the third coefficient for the power ratio curve.

Full Load Ratio Curve

The Full Load Ratio Curve is a quadratic equation that determines the fraction of full load power. The defining equation is:

$$FracFullLoadPower = C_1 + C_2 PartLoadRatio + C_3 PartLoadRatio^2$$

The following three fields contain the coefficients for the quadratic equation.

Field: Coefficient1 of the full load ratio curve

This numeric field contains the first coefficient for the full load ratio curve.

Field: Coefficient2 of the full load ratio curve

This numeric field contains the second coefficient for the full load ratio curve.

Field: Coefficient3 of the full load ratio curve

This numeric field contains the third coefficient for the full load ratio curve.

Field Temp Lower Limit Evaporator Outlet

This numeric field contains the lower limit for the evaporator outlet temperature. This temperature acts as a cut off for heat transfer in the evaporator, so that the fluid doesn't get too cold.

Field: the Fuel Use Curve

This alpha field contains the name of the Cooling Load to Fuel Use curve. The curve itself is specified separately using the EnergyPlus Curve Manager. The Fuel Use Curve is a quadratic equation that determines the ratio of Cooling Load to Fuel Energy. The defining equation is:

$$\text{CoolingLoadtoFuelCurve} = C_1 + C_2 * PLR + C_3 * PLR^2$$

where PLR is the Part Load Ratio from the Chiller. The Part Load Based Fuel Input Curve determines the ratio of fuel energy per unit time (J/s) / cooling load (W). This is illustrated by the logic block in the Engine Driven Chiller algorithm.

```
IF (PartLoadRat == 0)THEN
  EngineDrivenFuelEnergy = 0
ELSE
  ClngLoadFuelRat = CurveValue(EngineDrivenChiller(ChillerNum)%ClngLoadtoFuelCurve,
                               PartLoadRat )
  EngineDrivenFuelEnergy = QEvaporator / ClngLoadFuelRat
END IF
```

Field: the Recovery Jacket Heat curve

This alpha field contains the name of the Recovery Jacket Heat curve. The curve itself is specified separately using the EnergyPlus Curve Manager. The Recovery Jacket Heat Curve

is a quadratic equation that determines the ratio of recovery jacket heat to fuel energy. The defining equation is:

$$RecoveryJacketHeatToFuelRatio = C_1 + C_2 RL + C_3 RL^2$$

where RL is the Ratio of Load to Diesel Engine Capacity

Field: the Recovery Lube Heat curve

This alpha field contains the name of the Recovery Lube Heat curve. The curve itself is specified separately using the EnergyPlus Curve Manager. The Recovery Lubricant Heat Curve is a quadratic equation that determines the ratio of recovery lube heat to fuel energy. The defining equation is:

$$RecoveryLubeHeatToFuelRatio = C_1 + C_2 RL + C_3 RL^2$$

where RL is the Ratio of Load to Diesel Engine Capacity

Field: the Total Exhaust Energy curve

This alpha field contains the name of the Total Exhaust Energy curve. The curve itself is specified separately using the EnergyPlus Curve Manager. The Total Exhaust Energy Curve is a quadratic equation that determines the ratio of total exhaust energy to fuel energy. The defining equation is:

$$TotalExhaustToFuelRatio = C_1 + C_2 RL + C_3 RL^2$$

where RL is the Ratio of Load to Diesel Engine Capacity

Field: the Exhaust Temperature curve

This alpha field contains the name of the Exhaust Temperature curve. The curve itself is specified separately using the EnergyPlus Curve Manager. The Exhaust Temperature Curve is a quadratic equation that determines the absolute exhaust temperature. The defining equation is:

$$AbsoluteExhaustTemperature = C_1 + C_2 RL + C_3 RL^2$$

where RL is the Ratio of Load to Diesel Engine Capacity

UA Curve

The UA is an equation that determines the overall heat transfer coefficient for the exhaust gasses with the stack. The heat transfer coefficient ultimately helps determine the exhaust stack temperature. The defining equation is:

$$UAToCapacityRatio = C_1 EngineCapacity^{C_2}$$

The following two fields contain the coefficients for the equation.

Field: Coefficient1 of UA curve

This numeric field contains the first coefficient for the overall heat transfer coefficient curve.

Field: Coefficient2 of UA curve

This numeric field contains the second (exponential) coefficient for the overall heat transfer coefficient curve.

Field: Maximum Exhaust Flow per cooling load

This numeric field contains the maximum exhaust gas mass flow rate per watt of cooling provided by the engine driven chiller

Field: Design Minimum Exhaust temp. (Steam Saturation Temperature)

This numeric field contains the steam saturation temperature in Celsius that would be used to determine the energy recovered from a water jacket heat exchanger on the engine.

Field: Fuel Type

This alpha value specifies the type of fuel used in the engine. The fuel type can be NaturalGas, PropaneGas, Diesel, Gasoline, FuelOil#1, or FuelOil#2.

Field: Fuel Heating Value

This numeric field contains the heating value of the fuel used in Watt-hours/Liter.

Field: Design heat recovery water volumetric flow rate

This numeric field specifies the heat recovery volumetric flow rate through the engine in m^3/sec. The heat recovery loop manager and hot water tan must also be specified if heat energy is to be recovered from the engine driven chiller.

Field: Heat_Recovery_Side_Inlet_Node

This alpha field contains the identifying name for the heat recovery side inlet. If a loop is connected, then the jacket and lubricant heat will be recovered. There is no need for an effectiveness term, since the jacket and lubricant recovered heat energies are the actual recovered energies.

Field: Heat_Recovery_Side_Outlet_Node

This alpha field contains the identifying name for the heat recovery side outlet.

Field: Chiller Flow Mode

This alpha field determines if the Chiller is either a Variable or Constant Flow Chiller Simulation. The default, if not specified, is Variable Flow.

```
CHILLER:ENGINEDRIVEN,
   \min-fields 39
       \memo This chiller model is the empirical model from the Building Loads
       \memo and System Thermodynamics (BLAST) program.  Chiller performance
       \memo curves are generated by fitting catalog data to third order
       \memo polynomial equations.  Three sets of coefficients are required.
  A1 , \field Chiller Name
       \required-field
  A2 , \field Condenser Type
          \required-field
          \type choice
          \key AIR COOLED
          \key WATER COOLED
          \key Evap COOLED
          \default AIR COOLED
  N1 , \field Nominal Capacity
       \units W
       \required-field
  N2 , \field COP
       \required-field
       \note Nominal Refrigeration Cycle COP
  A3 , \field Plant_Side_Inlet_Node
       \required-field
  A4 , \field Plant_Side_Outlet_Node
       \required-field
  A5 , \field Condenser_Side_Inlet_Node
       \required-field
  A6 , \field Condenser_Side_Outlet_Node
       \required-field
  N3 , \field Minimum Part Load Ratio
       \minimum 0.0
  N4 , \field Maximum Part Load Ratio
       \minimum 0.0
  N5 , \field Opt Part Load Ratio
       \minimum 0.0
  N6 , \field Temp Design Condenser Inlet
       \units C
  N7 , \field Temp Rise Coefficient
  N8 , \field Temp Design Evaporator Outlet
       \units C
  N9 , \field Design Evaporator Volumetric Water Flow Rate
       \note  For variable volume this is the max flow & for constant flow this is the flow.
       \units m3/s
  N10, \field Design Condenser Volumetric Water Flow Rate
       \units m3/s
```

```
N11, \field Coefficient1 of the capacity ratio curve
N12, \field Coefficient2 of the capacity ratio curve
N13, \field Coefficient3 of the capacity ratio curve
N14, \field Coefficient1 of the power ratio curve
N15, \field Coefficient2 of the power ratio curve
N16, \field Coefficient3 of the power ratio curve
N17, \field Coefficient1 of the full load ratio curve
N18, \field Coefficient2 of the full load ratio curve
N19, \field Coefficient3 of the full load ratio curve
N20, \field Temp Lower Limit Evaporator Outlet
     \units C
     \Note  Special EngineDriven Chiller Parameters Below
A7, \field the Fuel Use Curve
     \type object-list
     \object-list QuadraticCurves
     \note curve = a + b*PLR + c*PLR**2
     \note PLR = Ratio of Evap. heat trans. rate to Fuel Use
A8, \field the Recovery Jacket Heat curve
     \type object-list
     \object-list QuadraticCurves
     \note curve = a + b*PLR + c*PLR**2
     \note PLR = Ratio of Evap. heat trans. rate to Nominal capacity
A9, \field the Recovery Lube Heat curve
     \type object-list
     \object-list QuadraticCurves
     \note curve = a + b*PLR + c*PLR**2
     \note PLR = Ratio of Evap. heat trans. rate to Nominal capacity
A10, \field the Total Exhaust Energy curve
     \type object-list
     \object-list QuadraticCurves
     \note curve = a + b*PLR + c*PLR**2
     \note PLR = Ratio of Evap. heat trans. rate to Nominal capacity
A11, \field the Exhaust Temperature curve
     \type object-list
     \object-list QuadraticCurves
     \note curve = a + b*PLR + c*PLR**2
     \note PLR = Ratio of Evap. heat trans. rate to Nominal capacity
N21, \field Coefficient1 of UA curve
     \note curve = C1 * Nominal capacity^C2
N22, \field Coefficient2 of UA curve
     \note curve = C1 * Nominal capacity^C2
N23, \field Maximum Exhaust Flow per W of Power Output
     \units (kg/s)/W
N24, \field Design Minimum Exhaust temp. (Steam Saturation Temperature)
     \units C
A12, \field fuel Type
     \required-field
     \type choice
     \key NaturalGas
     \key PropaneGas
     \key Diesel
     \key Gasoline
     \key FuelOil#1
     \key FuelOil#2
N25, \field Fuel Heating Value
     \units KJ/Kg
N26, \field Design heat recovery water flow rate
     \units m3/s
     \minimum 0.0
     \default 0.0
     \note if non-zero, then inlet, outlet nodes MUST be entered.
A13, \field Heat_Recovery_Side_Inlet_Node
A14, \field Heat_Recovery_Side_Outlet_Node
A15; \field Chiller Flow Mode
     \note Sets this Chiller to either a Variable or Constant Flow Simulation
     \type choice
     \key ConstantFlow
     \key VariableFlow
     \default VariableFlow
```

An example of this statement in an IDF is:

```
CHILLER:ENGINEDRIVEN,
    Diesel Engine Chiller,   !- Chiller Name
    WATER COOLED,            !- Condenser Type
    100000,                  !- Nominal Capacity {W}
    2.75,                    !- COP
    Diesel Engine Chiller ChW Inlet Node,
    Diesel Engine Chiller ChW Outlet Node,
    Diesel Engine Chiller Cnd Inlet Node,
    Diesel Engine Chiller Cnd Outlet Node,
    .15,                     !- Minimum Part Load Ratio
    1.0,                     !- Maximum Part Load Ratio
    .65,                     !- Opt Part Load Ratio
    35.0,                    !- Temp Design Condenser Inlet {C}
    2.778,                   !- Temp Rise Coefficient
    6.67,                    !- Temp Design Evaporator Outlet {C}
    0.0011,                  !- Design Evaporator Water Flow Rate {m3/s}
    0.0011,                  !- Design Condenser Water Flow Rate {m3/s}
    0.9949,                  !- Coefficient1 of the capacity ratio curve
    -0.045954,               !- Coefficient2 of the capacity ratio curve
    -0.0013543,              !- Coefficient3 of the capacity ratio curve
    2.333,                   !- Coefficient1 of the power ratio curve
    -1.975,                  !- Coefficient2 of the power ratio curve
    0.6121,                  !- Coefficient3 of the power ratio curve
    0.03303,                 !- Coefficient1 of the full load ratio curve
    0.6852,                  !- Coefficient2 of the full load ratio curve
    0.2818,                  !- Coefficient3 of the full load ratio curve
    5,                       !- Temp Lower Limit Evaporator Outlet {C}
    Fuel Use Curve,          !- the Fuel Use Curve
    Jacket Heat Recovery Curve, !- the Recovery Jacket Heat curve
    Lube Heat Recovery Curve,   !- the Recovery Lube Heat curve
    Total Exhaust Energy Curve, !- the Total Exhaust Energy curve
    Exhaust Temperature Curve,  !- the Exhaust Temperature curve
    0.00952329,              !- Coefficient1 of UA curve
    0.9,                     !- Coefficient2 of UA curve
    0.00000063,              !- Max Exh Flow per W of Power Output {(kg/s)/W}
    150,                     !- Design Min Exh temp. (Steam Sat Temp) {C}
    Diesel,                  !- fuel Type
    45500,                   !- Fuel Heating Value {KJ/Kg}
    0.0,                     !- Design heat recovery water flow rate {m3/s}
    ,                        !- Heat_Recovery_Side_Inlet_Node
    ,                        !- Heat_Recovery_Side_Outlet_Node
    VariableFlow;            !- Chiller Flow Mode
```

Engine Driven Chiller Outputs

```
HVAC,Average,Chiller Electric Power [W]
HVAC,Sum,Chiller Electric Consumption [J]
Zone,Meter,Electricity:Plant [J]
Zone,Meter,Cooling:Electricity [J]

HVAC,Average,Chiller Evap Heat Trans Rate [W]
HVAC,Sum,Chiller Evap Heat Trans [J]
Zone,Meter,EnergyTransfer:Plant [J]
Zone,Meter,Chillers:EnergyTransfer [J]
HVAC,Average,Chiller Evap Water Inlet Temp [C]
HVAC,Average,Chiller Evap Water Outlet Temp [C]
HVAC,Average,Chiller Evap Water Mass Flow Rate [kg/s]

HVAC,Average,Chiller Cond Heat Trans Rate [W]
HVAC,Sum,Chiller Cond Heat Trans [J]
Zone,Meter,HeatRejection:EnergyTransfer [J]
Air-cooled:
```

```
HVAC,Average,Chiller Cond Air Inlet Temp [C]
Water-cooled:
HVAC,Average,Chiller Cond Water Inlet Temp [C]
HVAC,Average,Chiller Cond Water Outlet Temp [C]
HVAC,Average,Chiller Cond Water Mass Flow Rate [kg/s]

HVAC,Average,Chiller Shaft Power [W]
HVAC,Sum,Chiller Shaft Energy [J]

HVAC,Average,Chiller Jacket Heat Recovery Rate [W]
HVAC,Sum,Chiller Jacket Heat Recovery [J]
Zone,Meter,HeatRecovery:EnergyTransfer [J]
HVAC,Average,Chiller Lube Heat Recovery Rate [W]
HVAC,Sum,Chiller Lube Heat Recovery [J]
HVAC,Average,Chiller Exhaust Heat Recovery Rate [W]
HVAC,Sum,Chiller Exhaust Heat Recovery [J]
HVAC,Average,Chiller Total Heat Recovery Rate [W]
HVAC,Sum,Chiller Total Heat Recovery [J]
HVAC,Average,Chiller Heat Recovery Mass Flow Rate [kg/s]
HVAC,Average,Chiller Heat Recovery Inlet Temp[C]
HVAC,Average,Chiller Heat Recovery Outlet Temp[C]
HVAC,Average,Chiller Exhaust Stack Temp[C]

  One of the following blocks will be applicable based on fuel type:

HVAC,Average,Chiller Gas Consumption Rate [W]
HVAC,Sum,Chiller Gas Consumption [J]
Zone,Meter,Gas:Plant [J]
Zone,Meter,Cooling:Gas [J]
HVAC,Average,Chiller Gas Mass Flow Rate [kg/s]

HVAC,Average,Chiller Propane Consumption Rate [W]
HVAC,Sum,Chiller Propane Consumption [J]
Zone,Meter,Propane:Plant [J]
Zone,Meter,Cooling:Propane [J]
HVAC,Average,Chiller Propane Mass Flow Rate [kg/s]

HVAC,Average,Chiller Diesel Consumption Rate [W]
HVAC,Sum,Chiller Diesel Consumption [J]
Zone,Meter,Diesel:Plant [J]
Zone,Meter,Cooling:Diesel [J]
HVAC,Average,Chiller Diesel Mass Flow Rate [kg/s]

HVAC,Average,Chiller Gasoline Consumption Rate [W]
HVAC,Sum,Chiller Gasoline Consumption [J]
Zone,Meter,Gasoline:Plant [J]
Zone,Meter,Cooling:Gasoline [J]
HVAC,Average,Chiller Gasoline Mass Flow Rate [kg/s]

HVAC,Average,Chiller FuelOil#1 Consumption Rate [W]
HVAC,Sum,Chiller FuelOil#1 Consumption [J]
Zone,Meter,FuelOil#1:Plant [J]
Zone,Meter,Cooling:FuelOil#1 [J]
HVAC,Average,Chiller FuelOil#1 Mass Flow Rate [kg/s]

HVAC,Average,Chiller FuelOil#2 Consumption Rate [W]
HVAC,Sum,Chiller FuelOil#2 Consumption [J]
Zone,Meter,FuelOil#2:Plant [J]
Zone,Meter,Cooling:FuelOil#2 [J]
HVAC,Average,Chiller FuelOil#2 Mass Flow Rate [kg/s]
```

These chiller output variables are defined above under "Generic Chiller Outputs."

Chiller:Gas Turbine

This chiller model is the empirical model from the Building Loads and System Thermodynamics (BLAST) program. Chiller performance curves are generated by fitting catalog data to third order polynomial equations. Three sets of coefficients are required.

Field: Chiller Name

This alpha field contains the identifying name for the gas turbine chiller.

Field: Condenser Type

This alpha field determines what type of condenser will be modeled with this chiller. The 3 type of condensers are AIR COOLED, WATER COOLED, and EVAP COOLED with the default being AIR COOLED if not specified. AIR COOLED and EVAP COOLED do not require a Condenser Loop to be specified, where the WATER COOLED option requires the full specification of the Condenser Loop and its associated equipment.

Field: Nominal Capacity

This numeric field contains the nominal cooling capability of the chiller in Watts.

Field: COP

This numeric field contains the Chiller's coefficient of performance.

Field: Plant_Side_Inlet_Node

This alpha field contains the identifying name for the gas turbine chiller plant side inlet node.

Field: Plant_Side_Outlet_Node

This alpha field contains the identifying name for the gas turbine chiller plant side outlet node.

Field: Condenser_Side_Inlet_Node

This alpha field contains the identifying name for the gas turbine chiller condenser side inlet node.

Field: Condenser_Side_Outlet_Node

This alpha field contains the identifying name for the gas turbine chiller condenser side outlet node.

Field: Minimum Part Load Ratio

This numeric field contains the gas turbine chiller's minimum part load ratio. The expected range is between 0 and 1. . The minimum part load is not the load where the machine shuts off, but where the amount of power remains constant to produce smaller loads than this fraction.

Field: Maximum Part Load Ratio

This numeric field contains the gas turbine chiller's maximum part load ratio. This value may exceed 1, but the normal range is between 0 and 1.1.

Field: Opt Part Load Ratio

This numeric field contains the gas turbine chiller's optimum part load ratio. This is the part load ratio at which the chiller performs at its maximum COP.

Field: Temp Design Condenser Inlet

This numeric field contains the gas turbine chiller's condenser inlet design temperature in Celsius.

Field: Temp Rise Coefficient

This numeric field contains the gas turbine chiller's temperature rise coefficient which is defined as the ratio of the required change in condenser water temperature to a given change in chilled water temperature, which maintains the capacity at the nominal value.. This is calculated as the following ratio:

$$\frac{TCL_{required} - TCL_{rated}}{TEL_{required} - TEL_{rated}}$$

where:

$TCL_{requiredl}$ = Required leaving condenser water outlet temperature to maintain rated capacity

TCL_{rated} = Rated leaving condenser water outlet temperature at rated capacity

$TEL_{required}$ = Required leaving evaporator water outlet temperature to maintain rated capacity

TEL_{rated} = Rated leaving evaporator water outlet temperature at rated capacity

Field: Temp Design Evaporator Outlet

This numeric field contains the gas turbine chiller's evaporator outlet design temperature in Celsius.

Field: Design Evaporator Volumetric Water Flow Rate

For variable volume chiller this is the maximum flow and for constant flow chiller this is the design flow rate. The units are in cubic meters per second.

Field: Design Condenser Volumetric Water Flow Rate

This numeric field contains the gas turbine chiller's design condenser water flow rate in cubic meters per second.

Capacity Ratio Curve

The Capacity Ratio Curve is a quadratic equation that determines the Ratio of Available Capacity to Nominal Capacity. The defining equation is:

$$AvailToNominalCapacityRatio = C_1 + C_2\Delta_{temp} + C_3\Delta_{temp}^2$$

The following three fields contain the coefficients for the quadratic equation.

Field: Coefficient1 of the capacity ratio curve

This numeric field contains the first coefficient for the capacity ratio curve.

Field: Coefficient2 of the capacity ratio curve

This numeric field contains the second coefficient for the capacity ratio curve.

Field: Coefficient3 of the capacity ratio curve

This numeric field contains the third coefficient for the capacity ratio curve.

Power Ratio Curve

The Power Ratio Curve is a quadratic equation that determines the Ratio of Full Load to Power. The defining equation is:

$$FullLoadtoPowerRatio = C_1 + C_2 AvailToNominalCapRatio + C_3 AvailToNominalCapRatio^2$$

The following three fields contain the coefficients for the quadratic equation.

Field: Coefficient1 of the power ratio curve

This numeric field contains the first coefficient for the power ratio curve.

Field: Coefficient2 of the power ratio curve

This numeric field contains the second coefficient for the power ratio curve.

Field: Coefficient3 of the power ratio curve

This numeric field contains the third coefficient for the power ratio curve.

Full Load Ratio Curve

The Full Load Ratio Curve is a quadratic equation that determines the fraction of full load power. The defining equation is:

$$FracFullLoadPower = C_1 + C_2 PartLoadRatio + C_3 PartLoadRatio^2$$

The following three fields contain the coefficients for the quadratic equation.

Field: Coefficient1 of the full load ratio curve

This numeric field contains the first coefficient for the full load ratio curve.

Field: Coefficient2 of the full load ratio curve

This numeric field contains the second coefficient for the full load ratio curve.

Field: Coefficient3 of the full load ratio curve

This numeric field contains the third coefficient for the full load ratio curve.

Field: Temp Lower Limit Evaporator Outlet

This numeric field contains the lower limit for the evaporator outlet temperature. This temperature acts as a cut off for heat transfer in the evaporator, so that the fluid doesn't get too cold.

Fuel Input Curve

The Fuel Input Curve is a polynomial equation that determines the Ratio of Fuel Input to Energy Output. The equation combines both the Fuel Input Curve Coefficients and the Temperature Based Fuel Input Curve Coefficients. The defining equation is:

$$FuelEnergyInput = PLoad * (FIC_1 + FIC_2 RLoad + FIC_3 RLoad^2) * (TBFIC_1 + TBFIC_2 AT_{air} + TBFIC_3 AT_{air}^2)$$

where FIC represents the Fuel Input Curve Coefficients, TBFIC represents the Temperature Based Fuel Input Curve Coefficients, Rload is the Ratio of Load to Gas Turbine Engine Capacity, and AT_{air} is the difference between the current ambient and design ambient temperatures.

The following three fields contain the coefficients for the fuel input curve.

Field: Coefficient1 of Fuel Input curve

This numeric field contains the first coefficient for the Fuel Input Curve.

Field: Coefficient2 of Fuel Input curve

This numeric field contains the second coefficient for the Fuel Input Curve.

Field: Coefficient3 of Fuel Input curve

This numeric field contains the third coefficient for the Fuel Input Curve.

The following three fields contain the coefficients for the temperature based fuel input curve.

Field: Coefficient1 of Temperature Based Fuel Input curve

This numeric field contains the first coefficient for the Temperature Based Fuel Input Curve.

Field: Coefficient2 of Temperature Based Fuel Input curve

This numeric field contains the second coefficient for the Temperature Based Fuel Input Curve.

Field: Coefficient3 of Temperature Based Fuel Input curve

This numeric field contains the third coefficient for the Temperature Based Fuel Input Curve.

Exhaust Flow Curve

The Exhaust Flow Curve is a quadratic equation that determines the Ratio of Exhaust Gas Flow Rate to Engine Capacity. The defining equation is:

$$ExhaustFlowRate = GTCapacity * (C_1 + C_2 AT_{air} + C_3 AT_{air}^2)$$

where GTCapacity is the Gas Turbine Engine Capacity, and AT_{air} is the difference between the current ambient and design ambient temperatures.

Field: Coefficient1 of Exhaust Flow curve

This numeric field contains the first coefficient for the Exhaust Flow Curve.

Field: Coefficient2 of Exhaust Flow curve

This numeric field contains the second coefficient for the Exhaust Flow Curve.

Field: Coefficient3 of Exhaust Flow curve

This numeric field contains the third coefficient for the Exhaust Flow Curve.

Exhaust Gas Temperature Curve

The Exhaust Gas Temperature Curve is a polynomial equation that determines the Exhaust Gas Temperature. The equation combines both the Exhaust Gas Temperature Curve

Coefficients (Based on the Part Load Ratio) and the (Ambient) Temperature Based Exhaust Gas Temperature Curve Coefficients. The defining equation is:

$$ExhaustTemperature = (C_1 + C_2 RLoad + C_3 RLoad^2) * (TBC_1 + TBC_2 AT_{air} + TBC_3 AT_{air}^2) - 273.15$$

where C represents the Exhaust Gas Temperature Curve Coefficients, TBC are the Temperature Based Exhaust Gas Temperature Curve Coefficients, RLoad is the Ratio of Load to Gas Turbine Engine Capacity, and AT_{air} is the difference between the actual ambient and design ambient temperatures.

Field: Coefficient1 of Exhaust Gas Temperature curve

This numeric field contains the first coefficient for the Exhaust Gas Temperature Curve.

Field: Coefficient2 of Exhaust Gas Temperature curve

This numeric field contains the second coefficient for the Exhaust Gas Temperature Curve.

Field: Coefficient3 of Exhaust Gas Temperature curve

This numeric field contains the third coefficient for the Exhaust Gas Temperature Curve.

Field: Coefficient1 of Temperature Based Exhaust Gas Temperature curve

This numeric field contains the first coefficient for the Temperature Based Exhaust Gas Temperature Curve.

Field: Coefficient2 of Temperature Based Exhaust Gas Temperature curve

This numeric field contains the second coefficient for the Temperature Based Exhaust Gas Temperature Curve.

Field: Coefficient3 of Temperature Based Exhaust Gas Temperature curve

This numeric field contains the third coefficient for the Temperature Based Exhaust Gas Temperature Curve.

Recovery Lubricant Heat Curve

The Recovery Lubricant Heat Curve is a quadratic equation that determines the recovery lube energy. The defining equation is:

$$RecoveryLubeEnergy = PLoad * (C_1 + C_2 RL + C_3 RL^2)$$

where Pload is the engine load and RL is the Ratio of Load to Gas Turbine Engine Capacity

The following three fields contain the coefficients for the quadratic equation.

Field: Coefficient1 of Recovery Lube Heat curve

This numeric field contains the first coefficient for the Recovery Lube Heat curve.

Field: Coefficient2 of Recovery Lube Heat curve

This numeric field contains the second coefficient for the Recovery Lube Heat curve.

Field: Coefficient3 of Recovery Lube Heat curve

This numeric field contains the third coefficient for the Recovery Lube Heat curve.

UA Curve

The UA is an equation that determines the overall heat transfer coefficient for the exhaust gasses with the stack. The heat transfer coefficient ultimately helps determine the exhaust stack temperature. The defining equation is:

$$UAToCapacityRatio = C_1 GasTurbineEngineCapacity^{C_2}$$

The following two fields contain the coefficients for the equation.

Field: Coefficient1 of UA curve

This numeric field contains the first coefficient for the overall heat transfer coefficient curve.

Field: Coefficient2 of UA curve

This numeric field contains the second (exponential) coefficient for the overall heat transfer coefficient curve.

Field: Gas Turbine Engine Capacity

This numeric field contains the capacity of the gas turbine engine in watts.

Field: Maximum Exhaust Flow per KW of Power Output

This numeric field contains the maximum exhaust gas mass flow rate per kilowatt of power out.

Field: Design Steam Saturation Temperature

This numeric field contains the design steam saturation temperature in Celsius.

Field: Fuel Heating Value

This numeric field contains the heating value of the diesel fuel used in Watt-hours/Liter.

Field: Heat_Recovery_Side_Inlet_Node

This alpha field contains the identifying name for the heat recovery side inlet. If a loop is connected, then the jacket and lubricant heat will be recovered. There is no need for an effectiveness term, since the jacket and lubricant recovered heat energies are the actual recovered energies.

Field: Heat_Recovery_Side_Outlet_Node

This alpha field contains the identifying name for the heat recovery side outlet.

Field: Chiller Flow Mode

This alpha field determines if the Chiller is either a Variable or Constant Flow Chiller Simulation. The default, if not specified, is Variable Flow.

```
CHILLER:GAS TURBINE,
   \min-fields 54
       \memo This chiller model is the empirical model from the Building Loads
       \memo and System Thermodynamics (BLAST) program.  Chiller performance
       \memo curves are generated by fitting catalog data to third order
       \memo polynomial equations.  Three sets of coefficients are required.
  A1 , \field Chiller Name
       \required-field
  A2 , \field Condenser Type
          \type choice
          \key AIR COOLED
          \key WATER COOLED
          \key EVAP COOLED
          \default AIR COOLED
  N1 , \field Nominal Capacity
       \units W
       \required-field
  N2 , \field COP
       \required-field
  A3 , \field Plant_Side_Inlet_Node
       \required-field
  A4 , \field Plant_Side_Outlet_Node
       \required-field
  A5 , \field Condenser_Side_Inlet_Node
       \required-field
  A6 , \field Condenser_Side_Outlet_Node
       \required-field
```

```
N3 , \field Minimum Part Load Ratio
     \minimum 0.0
N4 , \field Maximum Part Load Ratio
     \minimum 0.0
N5 , \field Opt Part Load Ratio
     \minimum 0.0
N6 , \field Temp Design Condenser Inlet
     \units C
N7 , \field Temp Rise Coefficient
N8 , \field Temp Design Evaporator Outlet
     \units C
N9 , \field Design Evaporator Volumetric Water Flow Rate
     \note  For variable volume this is the max flow & for constant flow this is the flow.
     \units m3/s
N10, \field Design Condenser Volumetric Water Flow Rate
     \units m3/s
N11, \field Coefficient1 of the capacity ratio curve
N12, \field Coefficient2 of the capacity ratio curve
N13, \field Coefficient3 of the capacity ratio curve
N14, \field Coefficient1 of the power ratio curve
N15, \field Coefficient2 of the power ratio curve
N16, \field Coefficient3 of the power ratio curve
N17, \field Coefficient1 of the full load ratio curve
N18, \field Coefficient2 of the full load ratio curve
N19, \field Coefficient3 of the full load ratio curve
N20, \field Temp Lower Limit Evaporator Outlet
     \units C
     \Note  Special Gas Turbine Chiller Parameters Below
N21, \field Coefficient1 of Fuel Input curve
N22, \field Coefficient2 of Fuel Input curve
N23, \field Coefficient3 of Fuel Input curve
N24, \field Coefficient1 of Temperature Based Fuel Input curve
N25, \field Coefficient2 of Temperature Based Fuel Input curve
N26, \field Coefficient3 of Temperature Based Fuel Input curve
N27, \field Coefficient1 of Exhaust Flow curve
N28, \field Coefficient2 of Exhaust Flow curve
N29, \field Coefficient3 of Exhaust Flow curve
N30, \field Coefficient1 of Exhaust Gas Temperature curve
N31, \field Coefficient2 of Exhaust Gas Temperature curve
N32, \field Coefficient3 of Exhaust Gas Temperature curve
N33, \field Coefficient1 of Temperature Based Exhaust Gas Temperature curve
N34, \field Coefficient2 of Temperature Based Exhaust Gas Temperature curve
N35, \field Coefficient3 of Temperature Based Exhaust Gas Temperature curve
N36, \field Coefficient1 of Recovery Lube Heat curve
N37, \field Coefficient2 of Recovery Lube Heat curve
N38, \field Coefficient3 of Recovery Lube Heat curve
N39, \field Coefficient1 of UA curve
N40, \field Coefficient2 of UA curve
N41, \field Gas Turbine Engine Capacity
     \units W
N42, \field Maximum Exhaust Flow per W of Power Output
     \units (kg/s)/W
N43, \field Design Steam Saturation Temperature
     \units C
N44, \field Fuel Heating Value
     \units KJ/Kg
N45, \field Design heat recovery water flow rate
     \units m3/s
     \minimum 0.0
     \default 0.0
     \note if non-zero, then inlet, outlet nodes MUST be entered.
A7 , \field Heat_Recovery_Side_Inlet_Node
A8 , \field Heat_Recovery_Side_Outlet_Node
A9 ; \field Chiller Flow Mode
     \note Sets this Chiller to either a Variable or Constant Flow Simulation
     \type choice
     \key ConstantFlow
     \key VariableFlow
     \default VariableFlow
```

An example of this statement in an IDF is:

```
CHILLER:GAS TURBINE, Big Chiller,
        WATER COOLED,
        50000,
        2.75,
        Big Chiller Inlet Node, Big Chiller Outlet Node,
        Big Chiller Condenser Inlet Node, Big Chiller Condenser Outlet Node,
        .15,
        1.0,
        .65,
        35.0,
        2.778,
        44,
        0.0011,            ! Evaporator Volume Flow Rate [m3/s]
        0.0011,            ! Condenser Volume Flow Rate [m3/s]
        0.9949, -0.045954, -0.0013543,    !Capacity Ratio Coeffs
        2.333, -1.975, 0.6121,            !Power Ratio Coeffs
        0.03303, 0.6852, 0.2818,          !Full Load Ratio Coeffs
        5,
        9.41, -9.48, 4.32,                !PLR Based Fuel Input Coeffs
        1.0044, -0.0008, 0,               !Temperature Based Fuel Input Coeffs
        15.63518363, -0.03059999, -0.0002,!Exhaust Flow Coeffs
        916.992, 307.998, 79.992,         !PLR Based Exhaust Gas Temp Coeffs
        1.005, 0.0018, 0,                 !Temp Based Exhaust Gas Temp Coeffs
        0.223, -0.4, 0.2286,              !Recovery Lube Heat Coeffs
        0.01907045, 0.9,                  !UA Coeffs
        50000,                            !Gas Turbine Engine Capacity
        11.72,                            !Maximum Exhaust Flow per KW Diesel Power Out
        150,                              !Design Steam Saturation Temperature (C)
        16000,                            ! Fuel Heating Value (W-hours/L)
        Big Chiller Heat Rec Inlet Node, Big Chiller Heat Rec Outlet Node,
        VariableFlow;
```

Gas Turbine Chilller Outputs

```
HVAC,Average,Chiller Electric Power [W]
HVAC,Sum,Chiller Electric Consumption [J]
Zone,Meter,Electricity:Plant [J]
Zone,Meter,Cooling:Electricity [J]

HVAC,Average,Chiller Evap Heat Trans Rate [W]
HVAC,Sum,Chiller Evap Heat Trans [J]
Zone,Meter,EnergyTransfer:Plant [J]
Zone,Meter,Chillers:EnergyTransfer [J]
HVAC,Average,Chiller Evap Water Inlet Temp [C]
HVAC,Average,Chiller Evap Water Outlet Temp [C]
HVAC,Average,Chiller Evap Water Mass Flow Rate [kg/s]

HVAC,Average,Chiller Cond Heat Trans Rate [W]
HVAC,Sum,Chiller Cond Heat Trans [J]
Zone,Meter,HeatRejection:EnergyTransfer [J]
Air-cooled:
HVAC,Average,Chiller Cond Air Inlet Temp [C]
Water-cooled:
HVAC,Average,Chiller Cond Water Inlet Temp [C]
HVAC,Average,Chiller Cond Water Outlet Temp [C]
HVAC,Average,Chiller Cond Water Mass Flow Rate [kg/s]

HVAC,Average,Chiller Shaft Power [W]
HVAC,Sum,Chiller Shaft Energy [J]

HVAC,Sum,Chiller Lube Heat Recovery [J]
Zone,Meter,HeatRecovery:EnergyTransfer [J]
HVAC,Average,Chiller Exhaust Stack Temp[C]
HVAC,Average,Chiller Heat Recovery Inlet Temp [C]
HVAC,Average,Chiller Heat Recovery Outlet Temp [C]
HVAC,Average,Chiller Heat Recovery Mass Flow Rate [kg/s]
```

```
HVAC,Average,Chiller Gas Consumption Rate [W]
HVAC,Sum,Chiller Gas Consumption [J]
Zone,Meter,Gas:Plant [J]
Zone,Meter,Cooling:Gas [J]
HVAC,Average,Chiller Gas Mass Flow Rate [kg/s]
HVAC,Sum,Chiller Gas Mass Consumption [kg]
```

These chiller output variables are defined above under "Generic Chiller Outputs."

Chiller:Gas Absorption

This chiller is a direct fired gas absorption chiller-heater which is modeled using performance curves similar to the equivalent chiller in DOE-2.1E. This type of chiller is unusual for EnergyPlus, because it may be used in the same plant on both a chilled water supply branch and a hot water supply branch. The chiller has six node connections for chilled water, condenser water, and hot water, and can provide simultaneous heating and cooling. During simultaneous opearation, the heating capacity is reduced as the cooling load increases (for more details see below).

Field: Chiller Name

This alpha field contains the identifying name for the chiller.

Field: Nominal Cooling Capacity

This numeric field contains the nominal cooling capability of the chiller in Watts.

Field: Heating to Cooling Capacity Ratio

A positive fraction that represents the ratio of the heating capacity divided by the cooling capacity at rated conditions. The default is 0.8.

Field: Fuel Input to Cooling Output Ratio

A positive fraction that represents the ratio of the instantaneous cooling fuel used divided by the cooling capacity at rated conditions. The default is 0.97.

Field: Fuel Input to Heating Output Ratio

A positive fraction that represents the ratio of the instantaneous heating fuel used divided by the nominal heating capacity. The default is 1.25.

Field: Electric Input to Cooling Output Ratio

A positive fraction that represents the ratio of the instantaneous electricity used divided by the cooling capacity at rated conditions. If the chiller is both heating and cooling only the greater of the computed cooling and heating electricity is used. The default is 0.01.

Field: Electric Input to Heating Output Ratio

A positive fraction that represents the ratio of the instantaneous electricity used divided by the nominal heating capacity. If the chiller is both heating and cooling, the greater of the cooling electricity and heating eletricity is used. The default is 0.0.

Field: Chilled Water Side Inlet Node

This alpha field contains the identifying name for the chiller chilled water side inlet node. This node name must be the same as the inlet node name for the chilled water supply branch on which this chiller is placed.

Field: Chilled Water Side Outlet Node

This alpha field contains the identifying name for the chiller chilled water side outlet node.

Field: Condenser Side Inlet Node

This alpha field contains the identifying name for the chiller condenser side inlet node.

Field: Condenser Side Outlet Node

This alpha field contains the identifying name for the chiller condenser side outlet node.

Field: Hot Water Side Inlet Node

This alpha field contains the identifying name for the chiller-heater hot water side inlet node. This node name must be the same as the inlet node name for the hot water supply branch on which this chiller-heater is placed.

Field: Hot Water Side Outlet Node

This alpha field contains the identifying name for the chiller-heater hot water side outlet node.

Field: Minimum Part Load Ratio

A positive fraction that represents the minimum cooling or heating output possible when operated continually at rated temperature conditions divided by the available cooling or heating capacity at those same conditions. If the load on the chiller is below this fraction, the chiller will cycle. If the chiller is simultaneously heating and cooling, the greater part load ratio will be used. The default is 0.1.

Field: Maximum Part Load Ratio

A positive fraction that represents the maximum cooling or heating output possible when operated continually at rated temperature conditions divided by the available cooling or heating capacity at those same conditions. If greater than 1.0, the chiller is typically thought of as capable of being overloaded. The default is 1.0.

Field: Optimum Part Load Ratio

A positive fraction that represents the optimum cooling or heating output possible when operated continually at rated temperature conditions divided by the available cooling or heating capacity at those same conditions. It represents the most desirable operating point for the chiller. The default is 1.0.

Field: Design Entering Condenser Water Temperature

The temperature in degrees C of the water entering the condenser of the chiller when operating at design conditions. This is usually based on the temperature delivered by the cooling tower in a water cooled application. The default is 29C

Field: Design Leaving Chilled Water Temperature

The temperature in degrees C of the water leaving the evaporator of the chiller when operating at design conditions; also called the chilled water supply temperature or leaving chilled water temperature. The default is 7C.

Field: Design Condenser Volumetric Water Flow Rate

The water flow rate at design conditions through the condenser in m^3/s.

Field: Cooling Capacity Function of Temperature Curve

The CoolCapfT curve represents the fraction of the cooling capacity of the chiller as it varies by temperature. The curve is normalized so that at design conditions the value of the curve should be 1.0. The curve is usually a biquadratic or bilinear curve with the input variables being the leaving chilled water temperature and either the entering or leaving condenser water temperature (see *Temperature Curve Input Variable* below). The available cooling capacity is computed as follows:

*AvailableCoolingCapacity = NominalCoolingCapacity * CoolCapFTCurve(LeavingChilledWaterTemp, SpecifiedCondenserTemp)*

Field: Fuel-Input-to Cooling Output Ratio Function of Temperature Curve

The CFIRfT curve represents the fraction of the fuel input to the chiller at full load as it varies by temperature. The curve is normalized so that at design conditions the value of the curve should be 1.0. The curve is usually a biquadratic or bilinear curve with the input variables being the leaving chilled water temperature and either the entering or leaving condenser water temperature (see *Temperature Curve Input Variable* below).

Field: Fuel-Input-to Cooling Output Ratio Function of Part Load Ratio Curve

The CFIRfPLR curve represents the fraction of the fuel input to the chiller as the load the chiller varies but the operating temperatures remain at the design values. The curve is normalized so that at full load the value of the curve should be 1.0. The curve is usually linear or quadratic. The cooling fuel input to the chiller is computed as follows:

*CoolFuelInput = AvailableCoolingCapacity * FuelInputToCoolingOutputRatio * FuelCoolFTCurve(LeavingChilledWaterTemp, SpecifiedCondenserTemp) * FuelCoolFPLRCurve(CoolPartLoadRatio)*

Field: Electric-Input-to Cooling Output Ratio Function of Temperature Curve

The ElecCoolFT curve represents the fraction of the electricity to the chiller at full load as it varies by temperature. The curve is normalized so that at design conditions the of the curve should be 1.0. The curve is usually a biquadratic or bilinear curve with the input variables being the leaving chilled water temperature and either the entering or leaving condenser water temperature (see *Temperature Curve Input Variable* below).

Field: Electric-Input-to Cooling Output Ratio Function of Part Load Ratio Curve

The ElecCoolFPLR curve represents the fraction of the electricity to the chiller as the load on the chiller varies but This operating temperatures remain at the design values. The curve is normalized so that at full load the value of the curve should be 1.0. The curve is usually linear or quadratic. The cooling electric input to the chiller is computed as follows:

*CoolElectricPower = NominalCoolingCapacity * ElectricInputToCoolingOutputRatio * OnTimeFraction * ElecCoolFTCurve (LeavingChilledWaterTemp, SpecifiedCondenserTemp) * ElecCoolFPLRCurve(CoolPartLoadRatio)*

Field: Heating Capacity Function of Cooling Capacity Curve

The HeatCapFCool curve represents how the heating capacity of the chiller varies with cooling capacity when the chiller is simultaeous heating and cooling. The curve is normalized so an input of 1.0 represents the nominal cooling capacity and an output of 1.0 represents the full heating capacity (see the Heating to cooling capacity ratio input) The curve is usually linear or quadratic. The available heating capacity is computed as follows:

*AvailableHeatingCapacity = NominalCoolingCapacity * HeatToCoolCapacityRatio * HeatCapFCoolCurve (CoolPartLoadRatio)*

Field: Fuel Input to Heat Output Ratio During Heating Only Function

When the chiller is operating as only a heater, the curve is used to represent the fraction of fuel used as the heating load varies. It is normalized so that a value of 1.0 is the full available heating capacity. The curve is usually linear or quadratic and will probably be similar to a boiler curve for most chillers.

*HeatFuelUseRate = AvailableHeatingCapacity * FuelInputToCoolingOutputRatio * lFuelHeatFHPLRCurve (HeatPartLoadRatio)*

Field: Temperature Curve Input Variable

This field sets the second independent variable in the three temperature dependent performance curves to either the leaving or entering condenser water temperature. Manufacturers express the performance of their chillers using either the leaving condenser water temperature (to the tower) or the entering condenser water temperature (from the tower). Valid choices for this field are: LEAVING-CONDENSER or ENTERING-CONDENSER. It is important that the performance curves and this field are consistent with each other. The default is ENTERING-CONDENSER.

Field: Condenser Type

The condenser can either be air cooled or connected to a cooling tower. This alpha field contains the keyword for the type of condenser, either AIR COOLED, or WATER COOLED. The default is WATER-COOLED.

Field: Chilled Water Lower Limit Temperature

The chilled water supply temperature in degrees C below which the chiller will shut off. The default is 2C

Field: Fuel Heating Value

The fuel heating value in J/m3. *This field is not currently used*.

```
CHILLER:GAS ABSORPTION,
          \note Direct fired gas absorption chiller using performance curves similar to DOE-2
  A1   ,  \field Chiller Name
! Capacities
  N1   ,  \field Nominal Cooling Capacity
            \units W
  N2   ,  \field Heating to cooling capacity ratio
            \note A positive fraction that represents the ratio of the
            \note heating capacity divided by the cooling capacity at rated conditions.
            \minimum  0
            \default  0.8
! Efficiencies
  N3   ,  \field Fuel Input to Cooling Output Ratio
            \note The positive fraction that represents the ratio of the
            \note instantaneous fuel used divided by the cooling capacity at rated conditions.
            \minimum> 0
            \default  0.97
  N4   ,  \field Fuel Input to Heating Output Ratio
            \note The positive fraction that represents the ratio of the
            \note instantaneous fuel used divided by the nominal heating capacity.
            \minimum  0
            \default  1.25
  N5   ,  \field Electric Input to Cooling Output Ratio
            \note The positive fraction that represents the ratio of the
            \note instantaneous electricity used divided by the cooling capacity at rated conditions.
            \note If the chiller is both heating and cooling only the cooling electricity is used.
            \minimum  0
            \default  0.01
  N6   ,  \field Electric Input to Heating Output Ratio
            \note The positive fraction that represents the ratio of the
            \note instantaneous electricity used divided by the nominal heating capacity.
            \note If the chiller is both heating and cooling only the cooling electricity is used.
            \minimum  0
            \default  0
! Connections
  A2   ,  \field Chilled Water Side Inlet Node
  A3   ,  \field Chilled Water Side Outlet Node
  A4   ,  \field Condenser Side Inlet Node
  A5   ,  \field Condenser Side Outlet Node
  A6   ,  \field Hot Water Side Inlet Node
  A7   ,  \field Hot Water Side Outlet Node
```

```
! Part Load Ratio
  N7   ,  \field Minimum Part Load Ratio
            \note The positive fraction that represents the minimum cooling output possible when
            \note operated continually at rated temperature conditions divided by the nominal
            \note cooling capacity at those same conditions.  If the load on the chiller is below
            \note this fraction the chiller will cycle.
            \minimum> 0
            \default  0.1
  N8   ,  \field Maximum Part Load Ratio
            \note The positive fraction that represents the maximum cooling output possible at
            \note rated temperature conditions divided by the nominal cooling capacity at those
            \note same conditions.  If greater than 1.0, the chiller is typically thought of as
            \note capable of being overloaded.
            \minimum  0.5
            \default  1.0
  N9   ,  \field Optimum Part Load Ratio
            \note The positive fraction that represents the optimal cooling output at rated
            \note temperature conditions divided by the nominal cooling capacity at those same
            \note conditions.  It represents the most desirable operating point for the chiller.
            \minimum> 0
            \default  1.0
! Design Conditions
  N10  ,  \field Design Entering Condenser Water Temperature
            \note The temperature of the water entering the condenser of the chiller when
            \note operating at design conditions.  This is usually based on the temperature
            \note delivered by the cooling tower in a water cooled application.
            \default 29
            \units C
  N11  ,  \field Design Leaving Chilled Water Temperature
            \note The temperature of the water leaving the evaporator of the chiller when
            \note operating at design conditions also called the chilled water supply temperature
            \note or leaving chilled water temperature.
            \default 7
            \units C
  N12  ,  \field Design Condenser Volumetric Water Flow Rate
            \note The water flow rate at design conditions through the condenser.
            \units m3/s
! Performance Curve References
  A8   ,  \field Cooling Capacity Function of Temperature Curve
            \note The CoolCapFT curve represents the fraction of the cooling capacity of the chiller as it
            \note varies by temperature.  The curve is normalized so that at design conditions the
            \note value of the curve should be 1.0.  The curve is usually a biquadratic or bilinear
            \note curve with the input variables being the leaving chilled water temperature and either
            \note the entering or leaving condenser water temperature.
  A9   ,  \field Fuel Input to Cooling Output Ratio Function of Temperature Curve
            \note The curve represents the fraction of the fuel input to the chiller at full load as
            \note it varies by temperature.  The curve is normalized so that at design conditions the
            \note value of the curve should be 1.0.  The curve is usually a biquadratic or bilinear
            \note curve with the input variables being the leaving chilled water temperature and either
            \note the entering or leaving condenser water temperature.
  A10  ,  \field Fuel Input to Cooling Output Ratio Function of Part Load Ratio Curve
            \note The curve represents the fraction of the fuel input to the chiller as the load on
            \note the chiller varies but the operating temperatures remain at the design values.
            \note The curve is normalized so that at full load the value of the curve should be 1.0.
            \note The curve is usually linear or quadratic.
  A11  ,  \field Electric Input to Cooling Output Ratio Function of Temperature Curve
            \note The curve represents the fraction of the electricity to the chiller at full load as
            \note it varies by temperature.  The curve is normalized so that at design conditions the
            \note value of the curve should be 1.0.  The curve is usually a biquadratic or bilinear
            \note curve with the input variables being the leaving chilled water temperature and either
            \note the entering or leaving condenser water temperature.
  A12  ,  \field Electric Input to Cooling Output Ratio Function of Part Load Ratio Curve
            \note The curve represents the fraction of the electricity to the chiller as the load on
            \note the chiller varies but the operating temperatures remain at the design values.
            \note The curve is normalized so that at full load the value of the curve should be 1.0.
            \note The curve is usually linear or quadratic.
  A13  ,  \field Heating Capacity Function of Cooling Capacity Curve
            \note The curve represents how the heating capacity of the chiller varies with cooling
            \note capacity when the chiller is simultaeous heating and cooling.  The curve is normalized
            \note so an input of 1.0 represents the nominal cooling capacity and an output of 1.0
            \note represents the full heating capacity (see the Heating to cooling capacity ratio input)
```

```
            \note The curve is usually linear or quadratic.
  A14  ,  \field Fuel Input to Heat Output Ratio During Heating Only Function
            \note When the chiller is operating as only a heater, this curve is used to represent the
fraction
            \note of fuel used as the heating load varies.  It is normalized so that a value of 1.0 is
            \note the full heating capacity.  The curve is usually linear or quadratic and will probably
            \note be similar to a boiler curve for most chillers.
  A15  ,  \field Temperature Curve Input Variable
            \type choice
            \key LEAVING-CONDENSER
            \key ENTERING-CONDENSER
            \default ENTERING-CONDENSER
            \note Sets the second independent variable in the three temperature dependent performance
curves
            \note to either the leaving or entering condenser water temperature.  Manufacturers express
            \note the performance of their chillers using either the leaving condenser water temperature
(to
            \note the tower) or the entering condenser water temperature (from the tower).
! Other Parameters
  A16  ,  \field Condenser Type
            \note The condenser can either be air cooled or connected to a cooling tower.
            \type choice
            \key AIR-COOLED
            \key WATER-COOLED
            \default WATER-COOLED
  N13  ,  \field Chilled Water Lower Limit Temperature
            \note The chilled water supply temperature below which the chiller
            \note will shut off.
            \units C
            \default 2.0
  N14  ;  \field Fuel Heating Value
            \note Not currently used.
            \units J/m3
```

An example of this statement in an IDF is:

```
CHILLER:GAS ABSORPTION,
    Big Chiller,             !- Chiller Name
    100000,                  !- Nominal Cooling Capacity {W}
    0.8,                     !- Heating to cooling capacity ratio
    0.97,                    !- Fuel Input to Cooling Output Ratio
    1.25,                    !- Fuel Input to Heating Output Ratio
    0.01,                    !- Electric Input to Cooling Output Ratio
    0.005,                   !- Electric Input to Heating Output Ratio
    Big Chiller Inlet Node,  !- Chilled Water Side Inlet Node
    Big Chiller Outlet Node, !- Chilled Water Side Outlet Node
    Big Chiller Condenser Inlet Node,   !- Condenser Side Inlet Node
    Big Chiller Condenser Outlet Node,  !- Condenser Side Outlet Node
    Big Chiller Heat Inlet Node,        !- Hot Water Side Inlet Node
    Big Chiller Heat Outlet Node,       !- Hot Water Side Outlet Node
    0.000001,                !- Minimum Part Load Ratio
    1,                       !- Maximum Part Load Ratio
    0.6,                     !- Optimum Part Load Ratio
    29,                      !- Design Entering Condenser Water Temperature {C}
    7,                       !- Design Leaving Chilled Water Temperature {C}
    50,                      !- Design Condenser Volumetric Water Flow Rate {m3/s}
    GasAbsFlatBiQuad,        !- Cooling Capacity Function of Temperature Curve
    GasAbsFlatBiQuad,        !- Fuel Input to Cooling Output Ratio Function of Temperature Curve
    GasAbsLinearQuad,        !- Fuel Input to Cooling Output Ratio Function of Part Load Ratio Curve
    GasAbsFlatBiQuad,        !- Electric Input to Cooling Output Ratio Function of Temperature Curve
    GasAbsFlatQuad,          !- Electric Input to Cooling Output Ratio Function of Part Load Ratio Curve
    GasAbsInvLinearQuad,     !- Heating Capacity Function of Cooling Capacity Curve
    GasAbsFlatQuad,          !- Fuel Input to Heat Output Ratio During Heating Only Function
    ENTERING-CONDENSER,      !- Temperature Curve Input Variable
    WATER-COOLED,            !- Condenser Type
    2,                       !- Chilled Water Lower Limit Temperature {C}
    10;                      !- Fuel Heating Value {J/m3}
```

Gas Absorption Chiller Outputs

```
HVAC,Average,Chiller Electric Power [W]
HVAC,Sum,Chiller Electric Consumption [J]
Zone,Meter,Electricity:Plant [J]
Zone,Meter,Cooling:Electricity [J]

HVAC,Average,Chiller Gas Consumption Rate [W]
HVAC,Sum,Chiller Gas Consumption [J]
Zone,Meter,Gas:Plant [J]
Zone,Meter,Cooling:Gas [J]

HVAC,Average,Chiller Evap Heat Trans Rate [W]
HVAC,Sum,Chiller Evap Heat Trans [J]
Zone,Meter,EnergyTransfer:Plant [J]
Zone,Meter,Chillers:EnergyTransfer [J]
HVAC,Average,Chiller Evap Water Inlet Temp [C]
HVAC,Average,Chiller Evap Water Outlet Temp [C]
HVAC,Average,Chiller Evap Water Mass Flow Rate [kg/s]

HVAC,Average,Chiller Cond Heat Trans Rate [W]
HVAC,Sum,Chiller Cond Heat Trans [J]
Zone,Meter,HeatRejection:EnergyTransfer [J]
The following output is applicable only for air-cooled chillers
HVAC,Average,Chiller Cond Air Inlet Temp [C]

The following three outputs are only available for water-cooled chillers
HVAC,Average,Chiller Cond Water Inlet Temp [C]
HVAC,Average,Chiller Cond Water Outlet Temp [C]
HVAC,Average,Chiller Cond Water Mass Flow Rate [kg/s]

  Outputs specific to Gas Absorption Chiller
HVAC,Average,Gas Absorption Chiller Fraction of Period Running

  Outputs specific to Gas Absorption Chiller during cooling operation
HVAC,Average,Gas Absorption Chiller Cooling Gas Consumption Rate [W]
HVAC,Sum,Gas Absorption Chiller Cooling Gas Consumption [J]

HVAC,Average,Gas Absorption Chiller Cooling Electric Power [W]
HVAC,Sum,Gas Absorption Chiller Cooling Electric Consumption [J]

HVAC,Average,Gas Absorption Chiller Cooling Part Load Ratio
HVAC,Average,Gas Absorption Chiller Cooling Capacity [W]

  Outputs specific to Gas Absorption Chiller during heating operation
HVAC,Average,Gas Absorption Chiller Heating Rate [W]
HVAC,Sum,Gas Absorption Chiller Heating Energy [J]
Zone,Meter,Boilers:EnergyTransfer [J]

HVAC,Average,Gas Absorption Chiller Heating Gas Consumption Rate [W]
HVAC,Sum,Gas Absorption Chiller Heating Gas Consumption [J]
Zone,Meter,Heating:Gas [J]

HVAC,Average,Gas Absorption Chiller Heating Electric Power [W]
HVAC,Sum,Gas Absorption Chiller Heating Electric Consumption [J]
Zone,Meter,Heating:Electricity [J]

HVAC,Average,Gas Absorption Chiller Heating Part Load Ratio
HVAC,Average,Gas Absorption Chiller Heating Capacity [W]

HVAC,Average,Gas Absorption Chiller Hot Water Inlet Temp [C]
HVAC,Average,Gas Absorption Chiller Hot Water Outlet Temp [C]
HVAC,Average,Gas Absorption Chiller Hot Water Mass Flow Rate [kg/s]
```

The "Chiller" output variables are defined above under "Generic Chiller Outputs." The specific "Gas Absorption Chiller" output variables and exceptions to the generic outputs are defined below.

Chiller Electric Power [W]

Chiller Electric Consumption [J]

These outputs are the electric power input to the chiller when operating in cooling mode, heating mode, or both. This value is not metered, but the separate cooling and heating electric consumption are metered (see below).

Chiller Gas Consumption Rate [W]

Chiller Gas Consumption [J]

These outputs are the natural gas input to the chiller when operating in cooling mode, heating mode, or both. This value is not metered, but the separate cooling and heating electric consumption are metered (see below).

Gas Absorption Chiller Fraction of Period Running

This is the average fraction of the time period during which the gas absorption chiller-heater was operating in either cooling mode, heating mode, or both.

Gas Absorption Chiller Cooling Gas Consumption Rate [W]

Gas Absorption Chiller Cooling Gas Consumption [J]

These outputs are the natural gas input to the gas absorption chiller to serve cooling operation. Consumption is metered on Cooling:Gas, Gas:Plant, and Gas:Facility.

Gas Absorption Chiller Cooling Electric Power [W]

Gas Absorption Chiller Cooling Electric Consumption [J]

These outputs are the electricity input to the gas absorption chiller to serve cooling operation. Consumption is metered on Cooling:Electricity, Electricity:Plant, and Electricity:Facility.

Gas Absorption Chiller Cooling Capacity [W]

This is the average available cooling capacity for the reported time period.

Gas Absorption Chiller Cooling Part Load Ratio

This is the average cooling load (Chiller Evap Heat Trans Rate [W]) divided by the average available cooling capacity (Gas Absorption Chiller Cooling Capacity [W]) for the reported time period.

Gas Absorption Chiller Heating Rate [W]

Gas Absorption Chiller Heating Energy [J]

These outputs are the heating delivered by the gas absorption chiller-heater to serve heating operation. Energy is metered on Boilers:EnergyTransfer, EnergyTransfer:Plant, and EnergyTransfer:Facility.

Gas Absorption Chiller Heating Gas Consumption Rate [W]

Gas Absorption Chiller Heating Gas Consumption [J]

These outputs are the natural gas input to the gas absorption chiller-heater to serve heating operation. Consumption is metered on Heating:Gas, Gas:Plant, and Gas:Facility.

Gas Absorption Chiller Heating Electric Power [W]

Gas Absorption Chiller Heating Electric Consumption [J]

These outputs are the electric power input to the gas absorption chiller to serve heating operation. Consumption is metered on Heating:Electricity, Electricity:Plant, and Electricity:Facility.

Gas Absorption Chiller Heating Capacity [W]

This is the average available heating capacity for the reported time period.

Gas Absorption Chiller Heating Part Load Ratio

This is the average heating load (Gas Absorption Chiller Heating Rate [W]) divided by the average available heating capacity (Gas Absorption Chiller Heating Capacity [W]) for the reported time period.

Gas Absorption Chiller Hot Water Inlet Temp [C]

Gas Absorption Chiller Hot Water Outlet Temp [C]

Gas Absorption Chiller Hot Water Mass Flow Rate [kg/s]

These outputs are the hot water inlet and outlet temperatures and flow rate for the gas absorption chiller-heater during heating mode operation.

Boiler: Simple

The boiler model provides a first order approximation of performance for fuel oil, gas and electric boilers. Boiler performance is based on a “theoretical” boiler efficiency (overall efficiency at design operating conditions) and a single quadratic fuel use/ part load ratio curve. This single curve accounts for all combustion inefficiencies and stack losses.

```
BOILER:SIMPLE,
       \memo This boiler model is an adaptation of the empirical model from the Building
       \memo Loads and System Thermodynamics (BLAST) program.  Boiler performance
       \memo curves are generated by fitting catalog data to third order
       \memo polynomial equations.  A constant efficiency boiler is modeled by setting
       \memo the fuel use coefficients as follows: N9=1, N10=0, N11=0
  A1 , \field Boiler Name
       \required-field
  A2 , \field Fuel Type
       \required-field
       \type choice
       \key Electricity
       \key NaturalGas
       \key PropaneGas
       \key FuelOil#1
       \key FuelOil#2
       \key Coal
       \key Diesel
       \key Gasoline
  N1 , \field Nominal Capacity
       \units W
  N2 , \field Theoretical Boiler Efficiency
       \type real
       \minimum 0.0
       \maximum 1.0
  N3 , \field Design Boiler Water Outlet Temp
       \units C
  N4 , \field Max Design Boiler Water Flow Rate
       \units m3/s
  N5 , \field Minimum Part Load Ratio
       \minimum 0.0
  N6 , \field Maximum Part Load Ratio
       \minimum 0.0
  N7 , \field Opt Part Load Ratio
       \minimum 0.0
  N8 , \field Coefficient1 of the fuel use/part load ratio curve
  N9 , \field Coefficient2 of the fuel use/part load ratio curve
  N10, \field Coefficient3 of the fuel use/part load ratio curve
  A3 , \field Boiler_Water_Inlet_Node
  A4 , \field Boiler_Water_Outlet_Node
  N11, \field Temp Upper Limit Water Outlet
       \units C
  A5;  \field Boiler Flow Mode
       \note Sets this Boiler to either a Variable or Constant Flow Simulation
       \type choice
       \key ConstantFlow
       \key VariableFlow
       \default VariableFlow
```

Field: Boiler Name

This alpha field contains the identifying name for the Boiler.

Field: Fuel Type

This alpha value specifies the type of fuel used by the boiler. The fuel type can be Electricity, NaturalGas, PropaneGas, FuelOil#1, FuelOil#2, Coal, Diesel, or Gasoline.

Field: Nominal capacity

This numeric field contains the nominal operating capacity (W) of the boiler.

Field: Theoretical Boiler Efficiency

This numeric field contains the heating efficiency (as a fraction between 0 and 1) of the boiler's burner.

Field: Design Boiler Water Outlet Temp

This numeric field contains the desired boiler water outlet temperature in Celsius.

Field: Max Design Boiler Water Flow Rate

This numeric field contains the maximum design water volumetric flow rate in m^3/sec. This should be the largest flow rate than can be heated to the design outlet temperature.

Field: Minimum Part Load Ratio

This numeric field contains the minimum part load ratio. If the ratio of demand to boiler nominal capacity is less than the minimum part load ratio, then the Min PLR will determine the operating PLR. The expected range is between 0 and 1.

Field: Maximum Part Load Ratio

This numeric field contains the maximum part load ratio. If the ratio of demand to boiler nominal capacity is greater than the maximum part load ratio, then the Max PLR will determine the operating PLR. This value may exceed 1, but the normal range is between 0 and 1.1.

Field: Opt Part Load Ratio

This numeric field contains the optimum part load ratio. This is the part load ratio at which the boiler performs at its maximum efficiency.

Fuel Use Equation

The model is based the following three equations

$$OperatingPartLoadRatio = \frac{BoilerLoad}{BoilerNomCapacity}$$

$$TheoreticalFuelUse = \frac{BoilerLoad}{BoilerEfficiency}$$

$$FuelUsed = \frac{TheoreticalFuelUsed}{C1 + C2 * OperatingPartLoadRatio + C3 * OperatingPartLoadRatio^2}$$

The following three fields define the three coefficients for the fuel use equation.

Field: Coefficient1 of the fuel use/part load ratio curve

This numeric field contains the fuel use / PLR coefficient1.

Field: Coefficient2 of the fuel use/part load ratio curve

This numeric field contains the fuel use / PLR coefficient2.

Field: Coefficient3 of the fuel use/part load ratio curve

This numeric field contains the fuel use / PLR coefficient3.

Field: Boiler_Water_Inlet_Node

This alpha field contains the water inlet node name.

Field: Boiler_Water_Outlet_Node

This alpha field contains the water outlet node name.

Field: Temp Upper Limit Water Outlet

This numeric field contains the outlet temperature upper limit.

Field: Boiler Flow Mode

This alpha field determines if the Boiler is either a Variable or Constant Flow Simulation. The default, if not specified, is Variable Flow.

An example of this statement in an IDF is:

```
  Boiler:Simple, Big Boiler,
   NaturalGas,
   1000000,
   0.8,
   65,
   10,
   .15,
   1.0,
   0.65,
   1, 0, 0,
   Big Boiler Inlet Node, Big Boiler Outlet Node
   110;
```

Boiler Outputs

Outputs available from the boiler:

```
HVAC,Average,Boiler Heating Output Rate [W]
HVAC,Sum,Boiler Heating Output Energy [J]
Zone,Meter,Boilers:EnergyTransfer [J]

HVAC,Average,Boiler Water Inlet Temp [C]
HVAC,Average,Boiler Water Outlet Temp [C]
HVAC,Average,Boiler Water Mass Flow Rate [kg/s]

  One of the following blocks will be applicable based on fuel type:

HVAC,Average,Boiler Electric Consumption Rate [W]
HVAC,Sum,Boiler Electric Consumption [J]
Zone,Meter, Electricity:Plant [J]
Zone,Meter,Heating:Electricity [J]

HVAC,Average,Boiler Gas Consumption Rate [W]
HVAC,Sum,Boiler Gas Consumption [J]
Zone,Meter,Gas:Plant [J]
Zone,Meter,Heating:Gas [J]

HVAC,Average,Boiler Propane Consumption Rate [W]
HVAC,Sum,Boiler Propane Consumption [J]
Zone,Meter, Propane:Plant [J]
Zone,Meter,Heating:Propane [J]
```

```
HVAC,Average,Boiler FuelOil#1 Consumption Rate [W]
HVAC,Sum,Boiler FuelOil#1 Consumption [J]
Zone,Meter, FuelOil#1:Plant [J]
Zone,Meter,Heating:FuelOil#1 [J]

HVAC,Average,Boiler FuelOil#2 Consumption Rate [W]
HVAC,Sum,Boiler FuelOil#2 Consumption [J]
Zone,Meter, FuelOil#2:Plant [J]
Zone,Meter,Heating:FuelOil#2 [J]

HVAC,Average,Boiler Coal Consumption Rate [W]
HVAC,Sum,Boiler Coal Consumption [J]
Zone,Meter,Coal:Plant [J]
Zone,Meter,Heating:Coal [J]

HVAC,Average,Boiler Diesel Consumption Rate [W]
HVAC,Sum,Boiler Diesel Consumption [J]
Zone,Meter, Diesel:Plant [J]
Zone,Meter,Heating:Diesel [J]
```

```
HVAC,Average,Boiler Gasoline Consumption Rate [W]
HVAC,Sum,Boiler Gasoline Consumption [J]
Zone,Meter, Gasoline:Plant [J]
Zone,Meter,Heating:Gasoline [J]
```

Boiler Heating Output Rate [W]

Boiler Heating Output Energy [J]

These outputs are the heating output (load) of the boiler. Energy is metered on Boilers:EnergyTransfer, EnergyTransfer:Plant, and EnergyTransfer:Facility.

Boiler Water Inlet Temp [C]

Boiler Water Outlet Temp [C]

Boiler Water Mass Flow Rate [kg/s]

These outputs are the hot water inlet and outlet temperatures and flow rate for the boiler.

Boiler <FuelType> Consumption Rate [W]

Boiler <FuelType> Consumption [J]

These outputs are the energy input to the boiler. Valid fuel types are: Electric, Gas (natural gas), Propane, FuelOil#1, FuelOil#2, Coal, Diesel, and Gasoline. Consumption is metered on Heating:<FuelType>, <FuelType>:Plant, and <FuelType>:Facility.

WaterHeater: Simple

The hot water heater is a constant efficiency heater that utilizes fuel oil, gas or electric energy.

Field: Water Heater Name

This alpha field contains the identifying name for the Water Heater

Field: Fuel Type

This alpha value specifies the type of fuel used by the water heater. The fuel type can be Electricity, NaturalGas, PropaneGas, FuelOil#1, FuelOil#2, Coal, Diesel, Gasoline, Steam, or PurchasedHeating.

Field: Nominal Capacity

This numeric field contains the nominal heating capability of the heater in Watts.

Field: Tank Volume

This numeric field contains the volume of stored "hot" water in liters. Note: the temperature of the tank water will change depending on the demand.

Field: Theoretical Water Heater Efficiency

This numeric field contains the heating efficiency (as a fraction between 0 and 1) of the water heater's burner.

Field: Loss Coefficient (UA) Tank Losses to Ambient Air

This numeric field contains the heat transfer coefficient for the tank water losing energy to the ambient air.

Field: Cold Water Supply Temp

This numeric field contains the temperature of the water feeding the tank in Celsius.

Field: Peak Scheduled Demand Flow Rate

This numeric field contains the maximum demand for scheduled hot water in m^3/sec.

Field: Demand Schedule - Percentage of Peak Scheduled Demand

This alpha field contains the identifying name for the demand schedule. This schedule contains ratios for the percent of peak demand flow for each hour of the day.

Field: Water Heater Setpoint Temperature Schedule

This alpha field contains the identifying name for the setpoint temperature schedule. This schedule contains the setpoint temperature for the tank water. In effect, this controls when the water heater runs. By setting a low setpoint temperature, the water heater can be turned off for periods that it will not be used.

Field: Water Heater Ambient Temperature Schedule

This alpha field contains the identifying name for the ambient temperature schedule. This schedule contains the ambient temperature around the water heater. This temperature along with the loss coefficient helps determine the heat loss of the tank water.

Field: Water Use Side Heater_Water_Inlet_Node

This alpha field contains the identifying name for the Use Side Water Heater Inlet Node. The Use side is the loop that normally requires hot water.

Field: Water Use Side Heater_Water_Outlet_Node

This alpha field contains the identifying name for the Use Side Water Heater Outlet Node. The Use side is the loop that normally requires hot water.

Field: Water Use Side Effectiveness

This numeric field contains the heat transfer effectiveness between the tank water and the use side. If this is set to 1 then complete heat transfer occurs, simulating tank water mixing. If the effectiveness is lower, then the use side outlet water will not be as hot as the tank water, simulating a heat exchanger with the tank water.

Field: Water Source Side Heater_Water_Inlet_Node

This alpha field contains the identifying name for the Source Side Water Heater Inlet Node. The Source side is the loop that normally provides hot water. (A Heat Recovery Loop)

Field: Water Source Side Heater_Water_Outlet_Node

This alpha field contains the identifying name for the Source Side Water Heater Outlet Node. The Source side is the loop that normally provides hot water. (A Heat Recovery Loop)

Field: Water Source Side Effectiveness

This numeric field contains the heat transfer effectiveness between the tank water and the Source side. If this is set to 1 then complete heat transfer occurs, simulating tank water mixing. If the effectiveness is lower, then the Source side outlet water will be hotter than the tank water, simulating a heat exchanger with the tank water.

The IDD definition for the Water Heater is:

```
WATERHEATER:SIMPLE,
       \memo This is a simple water heater model.
  A1 , \field Water Heater Name
       \required-field
  A2 , \field Fuel Type
       \required-field
       \type choice
       \key Electricity
       \key NaturalGas
       \key PropaneGas
       \key FuelOil#1
       \key FuelOil#2
       \key Coal
       \key Diesel
       \key Gasoline
       \key Steam
       \key PurchasedHeating
  N1 , \field Nominal Capacity
       \units W
       \minimum> 0.0
  N2 , \field Tank Volume
       \units m3
       \minimum> 0.0
       \default 0.151  !approximately 40 Gallons
  N3 , \field Theoretical Water Heater Efficiency
       \type real
       \minimum> 0.0
       \maximum 1.0
  N4 , \field Loss Coefficient (UA) Tank Losses to Ambient Air
       \units J/K
  N5, \field Cold Water Supply Temp
      \units C
  N6, \field Peak Scheduled Demand Flow Rate
      \units m3/s
  A3, \field Demand Schedule - Percentage of Peak Scheduled Demand
       \type object-list
       \object-list ScheduleNames
  A4, \field Water Heater Setpoint Temperature Schedule
       \type object-list
       \object-list ScheduleNames
  A5, \field Water Heater Ambient Temperature Schedule
       \type object-list
       \object-list ScheduleNames
  A6, \field Water Use Side Heater_Water_Inlet_Node
  A7, \field Water Use Side Heater_Water_Outlet_Node
  N7, \field Water Use Side Effectiveness
      \type real
      \minimum 0.0
      \maximum 1.0
  A8, \field Water Source Side Heater_Water_Inlet_Node
  A9, \field Water Source Side Heater_Water_Outlet_Node
  N8; \field Water Source Side Effectiveness
      \type real
      \minimum 0.0
      \maximum 1.0
```

An example of this statement in an IDF is:

```
WaterHeater:Simple, Big Water Heater,
    Electricity, 200000, 150,  0.8,    1000,    20,    1,
    Hot Water Demand Schedule,
    Hot Water Setpoint Temperature Schedule,
    Hot Water Ambient Temperature Schedule,
    Big Water Heater Use Side Inlet Node,
    Big Water Heater Use Side Outlet Node,
    0.001,
    Big Water Heater Source Side Inlet Node,
    Big Water Heater Source Side Outlet Node,
    0.5;
```

Water Heater Outputs

Outputs available from the Water Heater:

```
HVAC,Average,WaterHeater Tank Temp [C]

HVAC,Average,WaterHeater Scheduled Flowrate [kg/s]
HVAC,Average,WaterHeater Scheduled Demand [W]
HVAC,Sum,WaterHeater Scheduled Demand Energy [J]

HVAC,Average,WaterHeater Tank Demand [W]
HVAC,Sum,WaterHeater Tank Demand Energy [J]

HVAC,Average,WaterHeater Loss Demand [W]
HVAC,Sum,WaterHeater Loss Demand Energy [J]

HVAC,Average,WaterHeater Use Side Inlet Temperature [C]
HVAC,Average,WaterHeater Use Side Outlet Temperature [C]
HVAC,Average,WaterHeater Use Side Demand [W]
HVAC,Sum,WaterHeater Use Side Demand Energy [J]

HVAC,Average,WaterHeater Total Demand [W]
HVAC,Sum,WaterHeater Total Demand Energy [J]

HVAC,Average,WaterHeater Heat Recovery Supply Rate [W]
HVAC,Sum,WaterHeater Heat Recovery Supply Energy [J]

HVAC,Average,WaterHeater Heat Recovery Loss Rate [W]
HVAC,Sum,WaterHeater Heat Recovery Loss Energy [J]

HVAC,Average,WaterHeater Heat Recovery Used Rate [W]
HVAC,Sum,WaterHeater Heat Recovery Used Energy [J]

HVAC,Average,WaterHeater Burner Heating Demand [W]
HVAC,Sum,WaterHeater Burner Heating Demand Energy [J]

HVAC,Average,WaterHeater Burner Heating Rate [W]
HVAC,Sum,WaterHeater Burner Heating Energy [J]

  One of the following blocks will be applicable based on fuel type:

HVAC,Average,WaterHeater Electric Consumption Rate [W]
HVAC,Sum,WaterHeater Electric Consumption [J]
Zone,Meter, Electricity:Plant [J]
Zone,Meter,DHW:Electricity [J]

HVAC,Average,WaterHeater Gas Consumption Rate [W]
HVAC,Sum,WaterHeater Gas Consumption [J]
Zone,Meter,Gas:Plant [J]
Zone,Meter,DHW:Gas [J]
```

```
HVAC,Average,WaterHeater Propane Consumption Rate [W]
HVAC,Sum,WaterHeater Propane Consumption [J]
Zone,Meter, Propane:Plant [J]
Zone,Meter,DHW:Propane [J]

HVAC,Average,WaterHeater FuelOil#1 Consumption Rate [W]
HVAC,Sum,WaterHeater FuelOil#1 Consumption [J]
Zone,Meter, FuelOil#1:Plant [J]
Zone,Meter,DHW:FuelOil#1 [J]

HVAC,Average,WaterHeater FuelOil#2 Consumption Rate [W]
HVAC,Sum,WaterHeater FuelOil#2 Consumption [J]
Zone,Meter, FuelOil#2:Plant [J]
Zone,Meter,DHW:FuelOil#2 [J]

HVAC,Average,WaterHeater Coal Consumption Rate [W]
HVAC,Sum,WaterHeater Coal Consumption [J]
Zone,Meter,Coal:Plant [J]
Zone,Meter,DHW:Coal [J]

HVAC,Average,WaterHeater Diesel Consumption Rate [W]
HVAC,Sum,WaterHeater Diesel Consumption [J]
Zone,Meter, Diesel:Plant [J]
Zone,Meter,DHW:Diesel [J]

HVAC,Average,WaterHeater Gasoline Consumption Rate [W]
HVAC,Sum,WaterHeater Gasoline Consumption [J]
Zone,Meter, Gasoline:Plant [J]
Zone,Meter,DHW:Gasoline [J]

HVAC,Average,WaterHeater Steam Consumption Rate [W]
HVAC,Sum,WaterHeater Steam Consumption [J]
Zone,Meter, Steam:Plant [J]
Zone,Meter,DHW:Steam [J]

HVAC,Average,WaterHeater PurchasedHeating Consumption Rate [W]
HVAC,Sum,WaterHeater PurchasedHeating Consumption [J]
Zone,Meter,PurchasedHeating:Plant [J]
Zone,Meter,DHW:PurchasedHeating [J]
```

WaterHeater Tank Temp [C]

Average water heater storage tank temperature.

WaterHeater Scheduled Flowrate [kg/s]

Average flow rate for schedule domestic hot water (DHW) use.

WaterHeater Scheduled Demand [W]

WaterHeater Scheduled Demand Energy [J]

These outputs are the energy required to heat the scheduled flow of cold supply water to the current tank temperature setpoint.

WaterHeater Tank Demand [W]

WaterHeater Tank Demand Energy [J]

These outputs are the energy required to heat the tank water to the current setpoint.

WaterHeater Loss Demand [W]

WaterHeater Loss Demand Energy [J]

These outputs are the energy required to replace heat lost due to tank losses to the ambient air.

WaterHeater Use Side Inlet Temperature [C]

WaterHeater Use Side Outlet Temperature [C]

These outputs are the inlet and outlet temperature for the "use side" (plant hot water loop).

WaterHeater Use Side Demand [W]

WaterHeater Use Side Demand Energy [J]

These outputs are the energy required to heat the water from the "use side" (plant hot water loop) to the current tank temperature setpoint.

WaterHeater Total Demand [W]

WaterHeater Total Demand Energy [J]

These outputs are the total energy required to meet the sum of Scheduled Demand, Tank Demand, Loss Demand, and Use Demand.

WaterHeater Heat Recovery Supply Rate [W]

WaterHeater Heat Recovery Supply Energy [W]

There outputs are the energy supplied by the heat recovery source to heat the water heater tank.

WaterHeater Heat Recovery Loss Rate [W]

WaterHeater Heat Recovery Loss Energy [J]

These outputs are the recovered energy which is lost due to overheating of the tank.

WaterHeater Heat Recovery Used Rate [W]

WaterHeater Heat Recovery Used Energy [J]

These outputs are the useful recovered energy added to the tank by the heat recovery source.

WaterHeater Burner Heating Demand [W]

WaterHeater Burner Heating Demand Energy [J]

These outputs are the Total Demand less the Source Supply, which is the energy required from the burner or heating coil to return the tank to the setpoint temperature.

WaterHeater Burner Heating Rate [W]

WaterHeater Burner Heating Energy [J]

These outputs are the energy actually supplied by the burner to the tank. These will be equal to the Burner Heating Demand except when the demand exceeds the burner capacity.

WaterHeater <FuelType> Consumption Rate [W]

WaterHeater <FuelType> Consumption [J]

These outputs are the energy input to the burner after accounting for the burner efficiency. Valid fuel types are: Electric, Gas (natural gas), Propane, FuelOil#1, FuelOil#2, Coal, Diesel, Gasoline, Steam, and PurchaseHeating. Consumption is metered on DHW:<FuelType>, <FuelType>:Plant, and <FuelType>:Facility.

HeatPump:WaterToWater Cooling & HeatPump:WaterToWater Heating

The Energy Plus Ground Source Heat Pump is a reciprocating heat pump that serves both the hot water and the chilled water loop. The Supply side of the heat pump is usually connected to a Ground Heat Exchanger.

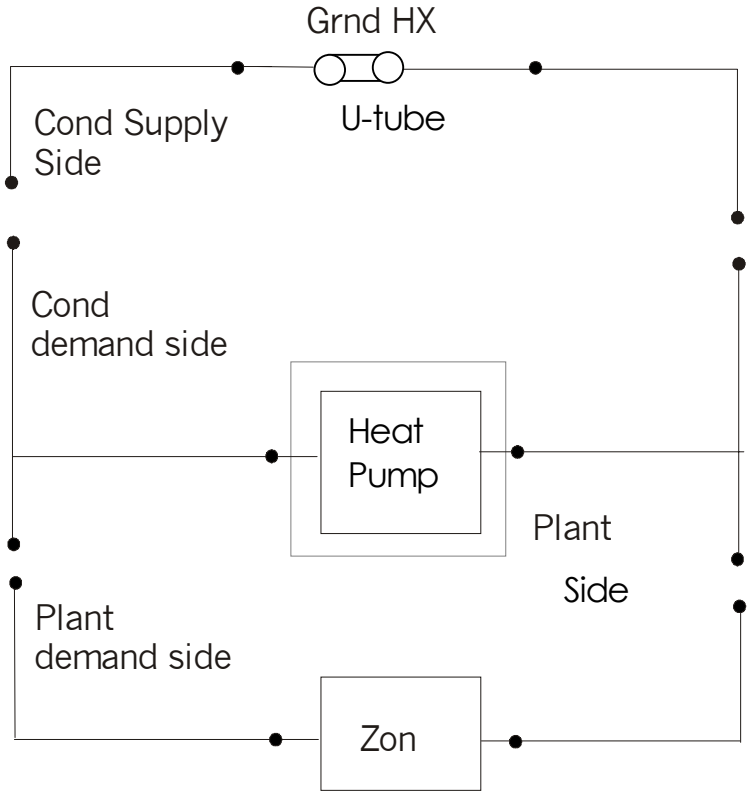

Figure 43. Schematic of EnergyPlus Ground Loop Heat Exchanger

The following sample data definition shows the fields of the heat pump. The Heat Pump has two sets of parameters, one for the heating mode and other for the cooling mode.

```
HEATPUMP:WATERTOWATER COOLING,\note OSU parameter estimation model
  A1,\field Water to Water Heat Pump Name
       \required-field
  A2,\field Source Side Inlet Node
  A3,\field Source Side Outlet Node
  A4,\field Load Side Inlet Node
  A5,\field Load Side Outlet Node
  N1,\field COP
  N2,\field Nominal Capacity
       \units W
  N3,\field Min PLR
       \minimum 0.0
  N4,\field Max PLR
       \minimum 0.0
  N5,\field optimum PLR
       \minimum 0.0
  N6,\field Load side Volumetric Flow Rate
       \units m3/s
       \minimum 0.0
  N7,\field Source Side Volumetric Flow Rate
       \units m3/s
       \minimum 0.0
  N8,\field Load side Heat Transfer Coefficient
     \units KW/K
  N9,\field Source Side Heat Transfer Coefficient
     \units KW/K
  N10,\field Piston Displacement
      \units M3/S
  N11,\field Compressor Clearance Factor
  N12,\field Compressor Suction And Discharge Pressure Drop
  N13,\field Superheating
      \units C
  N14,\field Constant Part Of Electro Mechanical Power Losses
      \units KW
  N15,\field Loss Factor
      \note Used To Define Electro Mechanical Loss That Is Supposed To Be Proportional To The Theoretical
Power
  N16,\field High Pressure Cut off
  N17;\field LowPressure Cut off

HEATPUMP:WATERTOWATER HEATING,\note OSU parameter estimation model
  A1,\field Water to Water Heat Pump Name
       \required-field
  A2,\field Source Side Inlet Node
  A3,\field Source Side Outlet Node
  A4,\field Load Side Inlet Node
  A5,\field Load Side Outlet Node
  N1,\field COP
  N2,\field Nominal Capacity
       \units W
  N3,\field Min PLR
       \minimum 0.0
  N4,\field Max PLR
       \minimum 0.0
  N5,\field optimum PLR
       \minimum 0.0
  N6,\field Load side Volumetric Flow Rate
       \units m3/s
       \minimum 0.0
  N7,\field Source Side Volumetric Flow Rate
       \units m3/s
       \minimum 0.0
  N8,\field Load side Heat Transfer Coefficient
     \units W/K
  N9,\field Source Side Heat Transfer Coefficient
      \units W/K
  N10,\field Piston Displacement
      \units m3/S
  N11,\field Compressor Clearance Factor
  N12,\field Compressor Suction And Dischrage Pressure Drop
  N13,\field Superheating
```

```
      \units C
  N14,\field Constant Part Of Electro Mechanical Power Losses
      \units W
  N15,\field Loss Factor
      \note Used To Define Electro Mechanical Loss That Is Supposed To Be Proportional To The Theoretical
Power
  N16,\field High Pressure Cut off
  N17;\field LowPressure Cut off
```

Field: GSHP NAME

This alpha field contains the identifying name for the ground source heat pump.

Field: Source Side Inlet node

This alpha field contains the heat pump's source side inlet node name.

Field: Source Side Outlet node

This alpha field contains the heat pump's source side outlet node name.

Field: Load Side Inlet Node

This alpha field contains the heat pump's load side inlet node name.

Field: Load Side Outlet Node

This alpha field contains the heat pump's load side outlet node name.

Field: Cop

This numeric field contains the coefficient of performance of the heat pump.

Field: Nominal Cap

This numeric field contains the nominal capacity of the heat pump in Watts.

Field: Min PLR

This numeric field contains the minimum part load ratio of the heat pump usually set to 0.

Field: Max PLR

This numeric field contains the maximum part load ratio of the heat pump usually set to 1.

Field: Optimum PLR

This numeric field contains the optimal part load ratio of the heat pump usually set to 1.

Field: Load side Vol Flow Rate

This numeric field contains the volumetric flow rate on the load side of the heat pump in m3/s

Field: Source Side Vol Flow Rate

This numeric field contains the volumetric flow rate on the source side of the heat pump in m3/s

Field: Load side Heat Transfer Coefficient

This numeric field contains Estimated parameter load side heat transfer coefficient W/K.

Field: Source Side Heat Transfer Coefficient

This numeric field contains Estimated parameter source side heat transfer coefficient W/K.

Field: Piston Displacement

This numeric field contains the Estimated parameter displacement of the reciprocating compressor in m3/s.

Field: Compressor Clearance Factor

This numeric field contains the Estimated parameter clearance factor of the reciprocating compressor.

Field: Compressor Suction and Discharge Pressure Drop

This numeric field contains the estimated parameter the pressure drop at compressor suction and discharge in Pascals (N/m2).

Field: Superheating

This numeric field contains the estimated parameter superheat at the evaporator outlet in °C.

Field: Constant Part Of Electro Mechanical Power Losses

This numeric field contains the estimated parameter power loss, which accounts for the loss of work due mechanical and electrical losses in the compressor in Watts.

Field: Efficiency of the Compressor

This numeric field contains the estimated parameter efficiency of the reciprocating compressor outer diameter of the U-tube (pipe) in meters.

Field: High Pressure Cut off

This numeric field contains the design pressure limit of the compressor in Pascals (N/m2).

Field: Low Pressure Cut off

This numeric field contains the design low-pressure limit of the compressor in Pascals (N/m2).

Since the same heat pump is defined virtually as two separate pumps, the connections to the condenser has to be done carefully. This is shown in the example below.

```
HEATPUMP:WATERTOWATER COOLING,GshpCLG,
        GshpCLG SourceSide Inlet Node, GshpCLG SourceSide Outlet Node,
        GshpCLG LoadSide Inlet Node, GshpCLG LoadSide Outlet Node,
        3.5,
        20000,
        0,
        1,
        1,
        .0017572,
        .0017572,
        29571.5,
        20134,
        .01399,
        .03028,
        53118,
        22.4029,
        1269.15,
        0.99982603,
        0.0,
        0.0;
```

Example of GSHP Cooling Specification

```
HEATPUMP:WATERTOWATER HEATING,GshpHeating,
        GshpHeating SourceSide Inlet Node, GshpHeating SourceSide Outlet Node,
        GshpHeating LoadSide Inlet Node, GshpHeating LoadSide Outlet Node,
        3.5,
        40000,
        0,
        1,
        1,
        .0017572,
        .0017572,
        35676.79,
        29460.347,
        .003706117,
        .000263319,
        47640.0,
        32.27435,
        234.84,
        0.5780146,
        0.0,
        0.0;
```

Example of GSHP Heating Specification

Steps to specify the Ground Source Heat Pump

For the heating mode:

13) Specify a branch for the Heat pump in hot water loop .

14) Include the branch name in the splitter and mixer branches.

15) Add a branch in condenser loop and include its name in the respective splitter and mixer.

```
! in hot water loop
BRANCH, Heating GshpHeating Branch,
      ,
  HEATPUMP:WATERTOWATER HEATING,
  GshpHeating,
  GshpHeating LoadSide Inlet Node,
  GshpHeating LoadSide Outlet Node,
  ACTIVE;

!in condenser loop
BRANCH, GshpHeating SourceSide Branch,
```

```
      ,
  HEATPUMP:WATERTOWATER HEATING,
  GshpHeating,
  GshpHeating SourceSide Inlet Node,
  GshpHeating SourceSide Outlet Node,
  ACTIVE;
```

Example of Heat Pump Links

For the cooling mode:

1. Specify a branch for the Heat pump in chilled water loop .
2. Include the branch name in the splitter and mixer branches.
3. Add a branch in condenser loop and include its name in the respective splitter and mixer.

```
! in chilled water loop
BRANCH,GshpCLG1 Chiller Branch,
  ,
  HEATPUMP:WATERTOWATER COOLING, GshpCLG1,
  GshpCLG LoadSide Inlet Node1,
  GshpCLG LoadSide Outlet Node1,
  Active;
!in condenser loop
BRANCH, GshpCLG1 Condenser Branch,
  ,
  HEATPUMP:WATERTOWATER COOLING, GshpCLG1,
  GshpCLG SourceSide Inlet Node1,
  GshpCLG SourceSide Outlet Node1,
  ACTIVE;
```

Purchased: Chilled Water

When the user is not interested in a plant simulation or there is some centralized source of chilled water, the following statement can be used in the input.

```
PURCHASED:CHILLED WATER,
  A1 , \field Purchased ID
  A2 , \field Plant_Loop_Inlet_Node
  A3 , \field Plant_Loop_Outlet_Node
  N1 ; \field Nominal Capacity
       \units W
```

Field: Purchased ID

This alpha field contains the identifying name for the purchased chilled water.

Field: Plant_Loop_Inlet_Node

This alpha field contains the identifying name for the purchased chilled water inlet node.

Field: Plant_Loop_Outlet_Node

This alpha field contains the identifying name for the purchased chilled water outlet node.

Field: Nominal Capacity

This numeric field contains the nominal demand (W) that the chilled water will meet.

An example of this statement in an IDF is:

```
PURCHASED:CHILLED WATER, Purchased Cooling,
        NODE_35,NODE_49,
        68000;
```

Purchased Chilled Water Outputs

```
HVAC,Average,Purchased Chilled Water Rate[W]
HVAC,Sum,Purchased Chilled Water Energy[J]
Zone,Meter,PurchasedCooling:Plant [J]
Zone,Meter,Cooling:PurchasedCooling [J]

HVAC,Average,Purchased Cooling Rate[W]

HVAC,Average,Purchased Cooling Inlet Temp[C]
HVAC,Average,Purchased Cooling Outlet Temp[C]
HVAC,Average,Purchased Cooling Mass Flow Rate[kg/s]
```

Purchased Chilled Water Rate [W]

Purchased Chilled Water Energy [J]

These outputs are the energy taken from purchased chilled water. Consumption is metered on Cooling:PurchasedCooling, PurchasedCooling:Plant, and PurchasedCooling:Facility.

Purchased Cooling Rate [W]

This is the useful cooling energy from purchased chilled water. For the current algorithm, this is the same as Purchased Chilled Water Rate.

Purchased Cooling Inlet Temp[C]

Purchased Cooling Outlet Temp[C]

Purchased Cooling Mass Flow Rate[kg/s]

These outputs are the supply-side plant loop chilled water inlet and outlet temperatures and mass flow rate.

Purchased: Hot Water

When the user is not interested in a plant simulation or there is some centralized source of hot water, the following statement can be used in the input.

```
PURCHASED:HOT WATER,
  A1 , \field Purchased ID
  A2 , \field Plant_Loop_Inlet_Node
  A3 , \field Plant_Loop_Outlet_Node
  N1 ; \field Nominal Capacity
       \units W
```

Field: Purchased ID

This alpha field contains the identifying name for the purchased hot water.

Field: Plant_Loop_Inlet_Node

This alpha field contains the identifying name for the purchased hot water inlet node.

Field: Plant_Loop_Outlet_Node

This alpha field contains the identifying name for the purchased hot water outlet node.

Field: Nominal Capacity

This numeric field contains the nominal demand (W) that the hot water will meet.

An example of this statement in an IDF is:

```
PURCHASED:HOT WATER,Purchased Heating,
        NODE_30,NODE_29,
        1000000;
```

Purchased Hot Water Outputs

```
HVAC,Average,Purchased Hot Water Rate[W]
HVAC,Sum,Purchased Hot Water Energy[J]
Zone,Meter, PurchasedHeating:Plant [J]
Zone,Meter,Cooling:PurchasedHeating [J]

HVAC,Average,Purchased Heating Rate[W]

HVAC,Average,Purchased Heating Inlet Temp[C]
HVAC,Average,Purchased Heating Outlet Temp[C]
HVAC,Average,Purchased Heating Mass Flow Rate[kg/s]
```

Purchased Hot Water Rate [W]

Purchased Hot Water Energy [J]

These outputs are the energy taken from purchased hot water. Consumption is metered on Heating:PurchasedHeating, PurchasedHeating:Plant, and PurchasedHeating:Facility.

Purchased Heating Rate [W]

This is the useful heating energy from purchased hot water. For the current algorithm, this is the same as Purchased Hot Water Rate.

Purchased Heating Inlet Temp[C]

Purchased Heating Outlet Temp[C]

Purchased Heating Mass Flow Rate[kg/s]

These outputs are the supply-side plant loop hot water inlet and outlet temperatures and mass flow rate.

Pump:Variable Speed

Pumps may be found in both plant and condenser loops. The syntax for a variable speed pump is given below.

```
PUMP:VARIABLE SPEED,
       \memo This pump model is described in the ASHRAE secondary HVAC toolkit.
       \min-fields 14
  A1 , \field Pump Name
        \required-field
  A2 , \field Inlet_Node
  A3 , \field Outlet_Node
  N1 , \field Rated Volumetric Flow Rate
        \units m3/s
        \autosizable
  N2 , \field Rated Pump Head
        \units Pa
        \default 179352
        \note default head is 60 feet
  N3 , \field Rated Power Consumption
        \units W
        \autosizable
  N4 , \field Motor Efficiency
        \type real
        \minimum 0.0
        \maximum 1.0
        \default 0.9
  N5 , \field Fraction of Motor Inefficiencies to Fluid Stream
        \minimum 0.0
        \maximum 1.0
        \default 0.0
  N6 , \field Coefficient1 of the Part Load Performance Curve
       \default 0.0
  N7 , \field Coefficient2 of the Part Load Performance Curve
       \default 1.0
  N8 , \field Coefficient3 of the Part Load Performance Curve
       \default 0.0
  N9 , \field Coefficient4 of the Part Load Performance Curve
       \default 0.0
  N10, \field Min Flow Rate while operating in variable flow capacity;
        \field This value can be zero and will be defaulted to that if not specified.
        \units m3/s
        \default 0.0
  A4 , \field Pump Control Type
        \type choice
        \key CONTINUOUS
        \key INTERMITTENT
        \default CONTINUOUS
  A5 ; \field Pump Flow Rate Schedule Name
        \note modifies the Rated Volumetric Flow Rate of the pump on a time basis
        \note the default is that the pump is ON and runs according to its other
        \note operational requirements specified above.  The schedule is for special pump operations
        \type object-list
        \object-list ScheduleNames
```

Field: Pump Name

This alpha field contains the identifying name for the pump.

Field: Inlet_Node

This alpha field contains the identifying name for the pump inlet node.

Field: Outlet_Node

This alpha field contains the identifying name for the pump outlet node.

Field: Rated Volumetric Flow Rate

This numeric field contains the pump's rated volumetric flow rate in cubic meters per second.

Field: Rated Pump Head

This numeric field contains the pump's rated head in Pascals.

Field: Rated Power Consumption

This numeric field contains the pump's rated power consumption in Watts.

Field: Motor Efficiency

This numeric field contains the pump's efficiency in decimal form (0 = 0%, 1 = 100%).

Field: Fraction of Motor Inefficiencies to Fluid Stream

This numeric field contains the pump's fraction of power loss to the fluid.

Field: Coefficient1 of the Part Load Performance Curve

This numeric field contains the first coefficient in the part load ratio curve. The fraction of full load power is determined by the cubic equation:

$$FractionFullLoadPower = C_1 + C_2 PLR + C_3 PLR^2 + C_4 PLR^3$$

where C_1,C_2,C_3,and C_4 are Coefficients 1 – 4 (below) and PLR is the Part Load Ratio.

Field: Coefficient2 of the Part Load Performance Curve

This numeric field contains the second coefficient in the part load ratio curve.

Field: Coefficient3 of the Part Load Performance Curve

This numeric field contains the third coefficient in the part load ratio curve.

Field: Coefficient4 of the Part Load Performance Curve

This numeric field contains the fourth coefficient in the part load ratio curve.

Field: Min Flow Rate

Min Flow Rate while operating in variable flow capacity.

Field: Pump Control Type

This is a choice field of CONTINUOUS or INTERMITTENT. A variable speed pump is defined with maximum and minimum flow rates that are the physical limits of the device. If there is no load on the loop and the pump is operating intermittently, then the pump can shutdown. For any other condition such as the loop having a load and the pump is operating intermittently or the pump is continuously operating (regardless of the loading condition), the pump will operate and select a flow somewhere between the minimum and maximum limits. In these cases where the pump is running, it will try to meet the flow request made by demand side components.

Field: Pump Flow Rate Schedule Name

Modifies the Rated Volumetric Flow Rate of the pump on a time basis the default is that the pump is ON and runs according to its other operational requirements specified above. The schedule is for special, not typical pump operations.

Examples of this object in the IDF is:

```
PUMP:VARIABLE SPEED,
  HW Circ Pump,  !- Pump Name
  HW Supply Inlet Node,  !- Inlet_Node
  HW Pump Outlet Node,  !- Outlet_Node
  autosize,  !- Rated Volumetric Flow Rate {m3/s}
  179352,  !- Rated Pump Head {Pa}
  autosize,  !- Rated Power Consumption {W}
  0.9,  !- Motor Efficiency
  0.0,  !- Fraction of Motor Inefficiencies to Fluid Stream
  0,  !- Coefficient1 of the Part Load Performance Curve
  1,  !- Coefficient2 of the Part Load Performance Curve
  0,  !- Coefficient3 of the Part Load Performance Curve
  0,  !- Coefficient4 of the Part Load Performance Curve
  0,  !- Min Flow Rate while operating in variable flow capacity; {m3/s}
  INTERMITTENT;  !- Pump Control Type

PUMP:VARIABLE SPEED,
  Circ Pump,  !- Pump Name
  CW Supply Inlet Node,  !- Inlet_Node
  CW Pump Outlet Node,  !- Outlet_Node
  .0011,  !- Rated Volumetric Flow Rate {m3/s}
  300000,  !- Rated Pump Head {Pa}
  500,  !- Rated Power Consumption {W}
  .87,  !- Motor Efficiency
  0.0,  !- Fraction of Motor Inefficiencies to Fluid Stream
  0,  !- Coefficient1 of the Part Load Performance Curve
  1,  !- Coefficient2 of the Part Load Performance Curve
  0,  !- Coefficient3 of the Part Load Performance Curve
  0,  !- Coefficient4 of the Part Load Performance Curve
  0,  !- Min Flow Rate while operating in variable flow capacity; {m3/s}
  INTERMITTENT;  !- Pump Control Type
```

Variable Speed Pump Outputs

```
HVAC,Average,Pump Electric Power [W]
HVAC,Sum,Pump Electric Consumption [J]
Zone,Meter,Pumps:Electricity [J]

HVAC,Average,Pump Shaft Power[W]
HVAC,Average,Pump Heat To Fluid[W]
HVAC,Sum,Pump Heat To Fluid Energy[J]
HVAC,Average,Pump Outlet Temp[C]
HVAC,Average,Pump Mass Flow Rate[kg/s]
```

Pump Electric Power [W]

Pump Electric Consumption [J]

These outputs are the electric power input to the pump motor. Consumption is metered on Pumps:Electricity, Electricity:Plant, and Electricity:Facility.

Pump Shaft Power[W]

This is the shaft power delivered from the motor to the pump.

Pump Heat To Fluid[W]

Pump Heat To Fluid Energy[J]

These outputs are the energy added to the fluid as heat. For the current algorithm, this is equal to Pump Shaft Power, because the loops are closed and all energy added to the fluid will ultimately become heat due to friction.

Pump Outlet Temp[C]

Pump Mass Flow Rate[kg/s]

These outputs are the water outlet temperature and mass flow rate.

Pump:Constant Speed

Pumps may be found in both plant and condenser loops. The syntax for a constant speed pump is given below.

```
PUMP:CONSTANT SPEED,
       \memo This pump model is described in the ASHRAE secondary HVAC toolkit.
       \min-fields 9
  A1 , \field Pump Name
        \required-field
  A2 , \field Inlet_Node
  A3 , \field Outlet_Node
  N1 , \field Rated Volumetric Flow Rate
        \units m3/s
        \autosizable
  N2 , \field Rated Pump Head
        \units Pa
        \default 179352
        \note default head is 60 feet
  N3 , \field Rated Power Consumption
        \units W
        \autosizable
  N4 , \field Motor Efficiency
        \type real
        \minimum 0.0
        \maximum 1.0
        \default 0.9
  N5 , \field Fraction of Motor Inefficiencies to Fluid Stream
        \minimum 0.0
        \maximum 1.0
        \default 0.0
  A4 , \field Pump Control Type
        \type choice
        \key CONTINUOUS
        \key INTERMITTENT
        \default CONTINUOUS
  A5 ; \field Pump Flow Rate Schedule Name
        \note modifies the Rated Volumetric Flow Rate of the pump on a time basis
        \note the default is that the pump is ON and runs according to its other
        \note operational requirements specified above.  The schedule is for special pump operations
        \type object-list
        \object-list ScheduleNames
```

Field: Pump Name

This alpha field contains the identifying name for the pump.

Field: Inlet_Node

This alpha field contains the identifying name for the pump inlet node.

Field: Outlet_Node

This alpha field contains the identifying name for the pump outlet node.

Field: Rated Volumetric Flow Rate

This numeric field contains the pump's rated volumetric flow rate in cubic meters per second.

Field: Rated Pump Head

This numeric field contains the pump's rated head in Pascals.

Field: Rated Power Consumption

This numeric field contains the pump's rated power consumption in Watts.

Field: Motor Efficiency

This numeric field contains the pump's efficiency in decimal form (0 = 0%, 1 = 100%).

Field: Fraction of Motor Inefficiencies to Fluid Stream

This numeric field contains the pump's fraction of power loss to the fluid.

Field: Pump Control Type

This is a choice field of CONTINUOUS or INTERMITTENT. The operation of a constant speed pump is fairly straightforward. If the user designates a constant speed pump that is operating continuously, the pump will run regardless of whether or not there is a load. This may have the net effect of adding heat to the loop if no equipment is turned on. If the pump is constant speed and operates intermittently, the pump will run at its capacity if a load is sensed and will shut off if there is no load on the loop.

Field: Pump Flow Rate Schedule Name

Modifies the Rated Volumetric Flow Rate of the pump on a time basis the default is that the pump is ON and runs according to its other operational requirements specified above. The schedule is for special, not typical pump operations.

An example of this statement in an IDF is:

```
PUMP:CONSTANT SPEED, Circ Pump,
        CW Supply Inlet Node, PumpChiller Node,
        .0011,
        300000,
        700,
        .87,
        0.0,
        INTERMITTENT;
```

Constant Speed Pump Outputs

```
HVAC,Average,Pump Electric Power [W]
HVAC,Sum,Pump Electric Consumption [J]
Zone,Meter,Pumps:Electricity [J]

HVAC,Average,Pump Shaft Power[W]
HVAC,Average,Pump Heat To Fluid[W]
HVAC,Sum,Pump Heat To Fluid Energy[J]
HVAC,Average,Pump Outlet Temp[C]
HVAC,Average,Pump Mass Flow Rate[kg/s]
```

These pump output variables are defined above under "Variable Speed Pump Outputs."

Cooling Tower:Single Speed

Cooling towers are components that may be assigned to condenser loops. The closed-circuit cooling tower is modeled as a counterflow heat exchanger with a single-speed fan (induced draft configuration) based on Merkel's theory. The user must define tower performance via one of two methods: design heat transfer coefficient-area product (UA) and design water flow rate, or nominal tower capacity at a specific rating point. Regardless of which method is

chosen, the design airflow rate and corresponding fan power must be specified. The model will also account for tower performance in the “free convection” regime, when the tower fan is off but the water pump remains on and heat transfer still occurs (albeit at a low level). If the user wants the model to account for “free convection”, they must specify the corresponding airflow rate and heat transfer coefficient-area product (UA), or the nominal tower capacity during this mode of operation.

The cooling tower seeks to maintain the temperature of the water exiting the cooling tower at (or below) a set point. The set point schedule is defined by the field “Condenser Loop Temperature Setpoint schedule or reference” for the CONDENSER LOOP object. The model first checks to determine the impact of “free convection”, if specified by the user, on the tower exiting water temperature. If the exiting water temperature based on “free convection” is at or below the set point, then the tower fan is not turned on. If the exiting water temperature remains above the set point after “free convection” is modeled, then the tower fan is turned on to reduce the exiting water temperature to the set point. The model assumes that part-load operation is represented by a simple linear interpolation between two steady-state regimes (i.e., tower fan on for the entire simulation time step and tower fan off for the entire simulation time step). Cyclic losses are not taken into account.

The IDD specification for the single-speed cooling tower is given below.

```
COOLING TOWER:SINGLE SPEED,
   \min-fields 9
       \memo This tower model is based on Merkel's theory, which is also the basis
       \memo for the tower model in ASHRAE's HVAC1 Toolkit. The closed-circuit cooling tower
       \memo is modeled as a counterflow heat exchanger with a single-speed fan drawing air
       \memo through the tower (induced-draft configuration).
  A1 , \field Tower Name
       \required-field
       \type alpha
       \note Tower name
  A2 , \field Water Inlet Node Name
       \required-field
       \type alpha
       \note Name of tower water inlet node
  A3 , \field Water Outlet Node Name
       \required-field
       \type alpha
       \note Name of tower water outlet node
  N1 , \field Design Water Flow Rate
       \type real
       \units m3/s
       \minimum> 0.0
       \autosizable
       \note Leave field blank if Tower Performance Input Method is NOMINAL CAPACITY
  N2 , \field Design Air Flow Rate
       \required-field
       \type real
       \units m3/s
       \minimum> 0.0
       \autosizable
  N3 , \field Fan Power at Design Air Flow Rate
       \required-field
       \type real
       \units W
       \minimum> 0.0
       \autosizable
  N4 , \field Tower UA Value at Design Air Flow Rate
       \type real
       \units W/C
       \minimum >0.0
       \maximum 300000.0
       \autosizable
       \note Leave field blank if Tower Performance Input Method is NOMINAL CAPACITY
```

```
N5 , \field Air Flow Rate in Free Convection Regime
     \type real
     \units m3/s
     \minimum 0.0
     \default 0.0
     \autosizable
N6 , \field Tower UA Value at Free Convection Air Flow Rate
     \type real
     \units W/C
     \minimum 0.0
     \maximum 300000.0
     \default 0.0
     \autosizable
     \note Leave field blank if Tower Performance Input Method is NOMINAL CAPACITY
A4 , \field Tower Performance Input Method
     \type Choice
     \key UA and Design Water Flow Rate
     \key Nominal Capacity
     \default Nominal Capacity
     \note User can define tower thermal performance by specifying the tower UA
     \note and the Design Air Flow Rate, or by specifying the tower nominal capacity
N7 , \field Tower Nominal Capacity
     \type real
     \units W
     \minimum> 0.0
     \note Nominal tower capacity with entering water at 35C (95F), leaving water at
     \note 29.44C (85F), entering air at 25.56C (78F) wet-bulb temperature and 35C (95F)
     \note dry-bulb temperature. Design water flow rate assumed to be 5.382E-8 m3/s per watt
     \note (3 gpm/ton). Nominal tower capacity times (1.25) gives the actual tower
     \note heat rejection at these operating conditions.
N8 ; \field Tower Free Convection Capacity
     \type real
     \units W
     \minimum 0.0
     \note Tower capacity in free convection regime with entering water at 35C (95F),
     \note leaving water at 29.44C (85F), entering air at 25.56C (78F) wet-bulb temperature
     \note and 35C (95F) dry-bulb temperature. Design water flow rate assumed to be
     \note 5.382E-8 m3/s per watt of nominal tower capacity (3 gpm/ton). Tower free
     \note convection capacity times (1.25) gives the actual tower heat rejection at these
     \note operating conditions.
```

Field: Tower Name

This alpha field contains the identifying name for the cooling tower.

Field: Water Inlet Node Name

This alpha field contains the identifying name for the cooling tower's water inlet node.

Field: Water Outlet Node Name

This alpha field contains the identifying name for the cooling tower's water outlet node.

Field: Design Water Flow Rate

This numeric field contains the design water flow rate through the tower in m^3/s. This value is the flow rate of the condenser loop water being cooled by the tower (not the flow rate of water being sprayed on the outside of the heat exchange coil). If the input field "Tower Performance Input Method" is specified as "UA and Design Water Flow Rate", then a water flow rate greater than zero must be defined or the field can be autosized. If autosized, a Plant Sizing object must be defined and the design water flow rate is derived from the design load to be rejected by the condenser loop and the design loop delta T (Ref. Plant Sizing and Input for Design Calculations and Component Autosizing). If "Tower Performance Input Method" is specified as "Nominal Capacity", then this field must be left blank since the model automatically assumes a water flow rate of 5.382E-8 m3/s per watt (3 gpm/ton) of tower capacity specified in the field "Tower Nominal Capacity".

Field: Design Air Flow Rate

This numeric field contains the design air flow rate induced by the tower fan in m^3/s. A value greater than zero must be defined regardless of the tower performance input method. Alternately, this field can be autosized. If autosized, the design air flow rate is calculated as follows:

$$Design\ Air\ Flow\ Rate = \frac{0.5\rho_{air}(Fan\ power\ at\ Design\ Air\ Flow\ Rate)}{190.}$$

where a fan pressure rise of 190 Pascals and total fan efficiency of 0.5 are assumed.

Field: Fan Power at Design Air Flow Rate

This numeric field contains the fan power (in watts) at the design air flow rate specified in the previous field. A value greater than zero must be specified regardless of the tower performance input method, or this field can be autosized. If autosized, the fan power is calculated as follows:

If "Tower Performance Input Method" is specified as "*UA and Design Water Flow Rate*", then

$$Fan\ power = 0.0105 \bullet \rho_{water} \bullet C_{p,water} \bullet Design\ Water\ Flow\ Rate \bullet Design\ Loop \Delta T$$

is used.

If "Tower Performance Input Method" is specified as "*Nominal Capacity*", then

$$Fan\ power = 0.0105 \bullet Tower\ Nominal\ Capacity$$

is used.

Field: Tower UA Value at Design Air Flow Rate

This numeric field contains the heat transfer coefficient-area product (UA) in watts per degree Celsius corresponding to the design air and water flow rates specified above. If the input field "Tower Performance Input Method" is specified as "UA and Design Water Flow Rate", then a UA value greater than zero but less than or equal to 300,000 must be defined, or the field can be autosized. If autosized, a Plant Sizing object must be defined and the design tower UA value is derived from the design load to be rejected by the condenser loop and the design loop delta T (Ref. Plant Sizing and Input for Design Calculations and Component Autosizing), assuming a tower water inlet temperature of 35C and tower inlet air at 35C drybulb/25.6C wetbulb. If "Tower Performance Input Method" is specified as "Nominal Capacity", then this field must be left blank since the model automatically calculates the tower UA based on the tower capacity specified in the field "Tower Nominal Capacity".

Field: Air Flow Rate in Free Convection Regime

This numeric field contains the air flow rate (m^3/s) when the tower is in the "free convection" regime (water flow exists but tower fan is turned off). This value must be less than the value specified for the field "Design Air Flow Rate". This field may be autosized, in which case it is set to 10% of the "Design Air Flow Rate". If the user does not wish to model "free convection" and is using the Tower Performance Input Method "UA and Design Water Flow", then this field should be set to 0.0. If the user specifies the Tower UA Value at Free Convection Air Flow Rate or Tower Free Convection Capacity as a value greater than zero, then the free convection air flow rate must be specified greater than 0.0.

Field: Tower UA Value at Free Convection Air Flow Rate

This numeric field contains the heat transfer coefficient-area product (W/°C) when the tower is in the "free convection" regime (water flow exists but tower fan is turned off). This value must be less than the value specified for the field "Tower UA Value at Design Air Flow Rate". This field may be autosized, in which case it is set to 10% of the "Tower UA Value at Design Air Flow Rate". If the user does not wish to model "free convection" and is using the Tower Performance Input Method "UA and Design Water Flow", then this field should be set to 0.0. If "Tower Performance Input Method" is specified as "Nominal Capacity", then this field must be left blank since the model automatically calculates the tower UA based on the tower capacity specified in the field "Tower Free Convection Capacity".

Field: Tower Performance Input Method

This alpha field contains the method by which the user will specify tower performance: "UA and Design Water Flow Rate" or "Nominal Capacity". If this field is left blank in the input data file, the default input method is assumed to be "Nominal Capacity". If the method "UA and Design Water Flow Rate" is selected, then the user must enter design UA values, design water flow rates and air flow rates as described for the previous input fields. If the method "Nominal Capacity" is selected then the fields "Design Water Flow Rate", "Tower UA Value at Design Air Flow Rate" and "Tower UA Value at Free Convection Air Flow Rate" must be left blank, but the fields "Nominal Tower Capacity" and "Tower Free Convection Capacity" must be entered as described below.

Field: Tower Nominal Capacity

This numeric input field contains the "nominal" heat rejection capacity of the cooling tower in watts, with entering water at 35C (95F), leaving water at 29.4C (85F), entering air at 25.6C (78F) wetbulb and 35C (95F) drybulb temperatures. The design water flow rate is assumed to be 5.382E-8 m^3/s per watt of nominal capacity (3 gpm/ton). 125% of this nominal tower capacity gives the actual tower heat rejection at these operating conditions (based on historical assumption that the tower must dissipate 0.25W of compressor heat for every watt of heat removed by the evaporator).

Field: Tower Free Convection Capacity

This numeric input field contains the "nominal" heat rejection capacity of the cooling tower in watts when the tower is in the "free convection" regime (water flow exists but tower fan is turned off), with entering water at 35C (95F), leaving water at 29.4C (85F), entering air at 25.6C (78F) wetbulb and 35C (95F) drybulb temperatures. The design water flow rate is assumed to be 5.382E-8 m^3/s per watt of nominal tower capacity (input field above). 125% of this free convection tower capacity gives the actual tower heat rejection at these operating conditions (based on historical assumption that the tower must dissipate 0.25W of compressor heat for every watt of heat removed by the evaporator). The value specified for this field must be less than the value specified for the field "Tower Nominal Capacity". If the user does not wish to model "free convection", then this field should be set to 0.0. If the user specifies a value greater than zero, then the "Air Flow Rate in Free Convection Regime" field must contain a value greater than zero.

Two examples of an IDF specification for this object are shown below:

```
COOLING TOWER:SINGLE SPEED,
  My Tower,                     ! Tower name
  Condenser Tower Inlet Node,   ! Tower inlet water node name
  Condenser Tower Outlet Node,  ! Tower outlet water node name
  .0011,                        ! Design water flow rate, m3/s
  16.0,                         ! Design air flow rate, m3/s
  10000.,                       ! Fan power at design air flow, W
  3500.,                        ! Tower UA at design flow rates, W/C
  0.0,                          ! Air flow rate for free convection, m3/s
  0.0,                          ! Tower UA at free convection air flow, W/C
  UA AND DESIGN WATER FLOW RATE;! Tower Performance Input Method
```

```
COOLING TOWER:SINGLE SPEED,
  My Tower,                   ! Tower name
  Condenser Tower Inlet Node, ! Tower inlet water node name
  Condenser Tower Outlet Node,! Tower outlet water node name
  ,                           ! Design water flow rate, m3/s
  autosize,                   ! Design air flow rate, m3/s
  1000.,                      ! Fan power at design air flow, W
  ,                           ! Tower UA at design flow rates, W/C
  autosize,                   ! Air flow rate for free convection, m3/s
  ,                           ! Tower UA at free convection air flow, W/C
  NOMINAL CAPACITY,           ! Tower Performance Input Method
  95250.,                     ! Tower Nominal Capacity
  9525.;                      ! Tower Free Convection Capacity
```

Cooling Tower:Single Speed Outputs

```
HVAC,Average,Tower Fan Electric Power [W]
HVAC,Sum,Tower Fan Electric Consumption [J]
Zone,Meter,HeatRejection:Electricity [J]

HVAC,Average,Tower Heat Transfer [W]

HVAC,Average,Tower Water Inlet Temp [C]
HVAC,Average,Tower Water Outlet Temp [C]
HVAC,Average,Tower Water Mass Flow Rate [kg/s]
```

Tower Fan Electric Power [W]

Tower Fan Electric Consumption [J]

These outputs are the electric power input to the tower fans. Consumption is metered on HeatRejection:Electricity, Electricity:Plant, and Electricity:Facility.

Tower Heat Transfer [W]

This is the rate at which heat is removed from the condenser water loop by the tower.

Tower Water Inlet Temp [C]

Tower Water Outlet Temp [C]

Tower Water Mass Flow Rate [kg/s]

These outputs are the tower water inlet and outlet temperatures, and mass flow rate.

Cooling Tower:Two Speed

The two-speed cooling tower is modeled in a similar fashion to the single-speed tower. The closed-circuit cooling tower is modeled as a counterflow heat exchanger with a two-speed fan (induced draft configuration) based on Merkel's theory. The user must define tower

performance via one of two methods: heat transfer coefficient-area product (UA) and design water flow rate, or nominal tower capacity at a specific rating point. Regardless of which method is chosen, the airflow rate and corresponding fan power at both high and low fan speed must be specified. The model will also account for tower performance in the “free convection” regime, when the tower fan is off but the water pump remains on and heat transfer still occurs (albeit at a low level). If the user wants the model to account for “free convection”, they must specify the corresponding air flow rate and heat transfer coefficient-area product (UA), or the nominal tower capacity during this mode of operation.

The cooling tower seeks to maintain the temperature of the water exiting the cooling tower at (or below) a set point. The set point schedule is defined by the field “Condenser Loop Temperature Setpoint schedule or reference” for the CONDENSER LOOP object. The model first checks to determine the impact of “free convection”, if specified by the user, on the tower exiting water temperature. If the exiting water temperature based on “free convection” is at or below the set point, then the tower fan is not turned on. If the exiting water temperature remains above the set point after “free convection” is modeled, then the tower fan is turned on at low speed to reduce the exiting water temperature. If operating the tower fan at low speed does not reduce the exiting water temperature to the set point, then the tower fan is increased to its high speed.

The model assumes that part-load operation is represented by a simple linear interpolation between two steady-state regimes (i.e., tower fan at high speed for the entire simulation time step and tower fan at low speed for the entire simulation time step, or tower fan at low speed for the entire simulation time step and tower fan off for the entire simulation time step). Cyclic losses are not taken into account.

The IDD specification for the two-speed cooling tower is given below.

```
COOLING TOWER:TWO SPEED,
   \min-fields 12
       \memo This tower model is based on Merkel's theory, which is also the basis
       \memo for the tower model in ASHRAE's HVAC1 Toolkit. The closed-circuit cooling tower
       \memo is modeled as a counterflow heat exchanger with a two-speed fan drawing air
       \memo through the tower (induced-draft configuration).
  A1 , \field Tower Name
       \required-field
       \type alpha
       \note Tower name
  A2 , \field Water Inlet Node Name
       \required-field
       \type alpha
       \note Name of tower water inlet node
  A3 , \field Water Outlet Node Name
       \required-field
       \type alpha
       \note Name of tower water outlet node
  N1 , \field Design Water Flow Rate
       \type real
       \units m3/s
       \minimum> 0.0
       \autosizable
       \note Leave field blank if Tower Performance Input Method is NOMINAL CAPACITY
```

```
N2 , \field Air Flow Rate at High Fan Speed
     \required-field
     \type real
     \units m3/s
     \minimum> 0.0
     \autosizable
N3 , \field Fan Power at High Fan Speed
     \required-field
     \type real
     \units W
     \minimum> 0.0
     \autosizable
N4 , \field Tower UA Value at High Fan Speed
     \type real
     \units W/C
     \minimum> 0.0
     \maximum 300000.0
     \autosizable
     \note Leave field blank if Tower Performance Input Method is NOMINAL CAPACITY
N5 , \field Air Flow Rate at Low Fan Speed
     \required-field
     \type real
     \units m3/s
     \minimum> 0.0
     \autosizable
     \note Low speed air flow rate must be less than high speed air flow rate
     \note Low speed air flow rate must be greater than free convection air flow rate
N6 , \field Fan Power at Low Fan Speed
     \required-field
     \type real
     \units W
     \minimum> 0.0
     \autosizable
N7 , \field Tower UA Value at Low Fan Speed
     \type real
     \units W/C
     \minimum> 0.0
     \maximum 300000.0
     \autosizable
     \note Leave field blank if Tower Performance Input Method is NOMINAL CAPACITY
     \note Low speed tower UA must be less than high speed tower UA
     \note Low speed tower UA must be greater than free convection tower UA
N8 , \field Air Flow Rate in Free Convection Regime
     \type real
     \units m3/s
     \minimum 0.0
     \default 0.0
     \autosizable
N9 , \field Tower UA Value at Free Convection Air Flow Rate
     \type real
     \minimum 0.0
     \maximum 300000.0
     \default 0.0
     \autosizable
     \note Leave field blank if Tower Performance Input Method is NOMINAL CAPACITY
A4 , \field Tower Performance Input Method
     \type Choice
     \key UA and Design Water Flow Rate
     \key Nominal Capacity
     \default Nominal Capacity
     \note User can define tower thermal performance by specifying the tower UA
     \note and the Design Air Flow Rate, or by specifying the tower nominal capacity
N10, \field Tower High-Speed Nominal Capacity
     \type real
     \units W
     \minimum> 0.0
     \note Nominal tower capacity with entering water at 35C (95F), leaving water at
     \note 29.44C (85F), entering air at 25.56C (78F) wet-bulb temperature and 35C (95F)
     \note dry-bulb temperature, with the tower fan operating at high speed. Design water
     \note flow rate assumed to be 5.382E-8 m3/s per watt(3 gpm/ton). Nominal tower capacity
     \note times (1.25) gives the actual tower heat rejection at these operating conditions.
```

```
N11, \field Tower Low-Speed Nominal Capacity
     \type real
     \units W
     \minimum> 0.0
     \note Nominal tower capacity with entering water at 35C (95F), leaving water at
     \note 29.44C (85F), entering air at 25.56C (78F) wet-bulb temperature and 35C (95F)
     \note dry-bulb temperature, with the tower fan operating at low speed. Design water flow
     \note rate assumed to be 5.382E-8 m3/s per watt of tower high-speed nominal capacity
     \note (3 gpm/ton). Nominal tower capacity times (1.25) gives the actual tower heat
     \note rejection at these operating conditions.
N12; \field Tower Free Convection Capacity
     \type real
     \units W
     \minimum 0.0
     \note Tower capacity in free convection regime with entering water at 35C (95F),
     \note leaving water at 29.44C (85F), entering air at 25.56C (78F) wet-bulb temperature
     \note and 35C (95F) dry-bulb temperature. Design water flow rate assumed to be
     \note 5.382E-8 m3/s per watt of tower high-speed nominal capacity (3 gpm/ton). Tower
     \note free convection capacity times (1.25) gives the actual tower heat rejection at
     \note these operating conditions.
```

Field: Tower Name

This alpha field contains the identifying name for the cooling tower.

Field: Water Inlet Node Name

This alpha field contains the identifying name for the cooling tower's water inlet node.

Field: Water Outlet Node Name

This alpha field contains the identifying name for the cooling tower's water outlet node.

Field: Design Water Flow Rate

This numeric field contains the design water flow rate through the tower in m^3/s. This value is the flow rate of the condenser loop water being cooled by the tower (not the flow rate of water being sprayed on the outside of the heat exchange coil). If the input field "Tower Performance Input Method" is specified as "UA and Design Water Flow Rate", then a water flow rate greater than zero must be defined or the field can be autosized. If autosized, a Plant Sizing object must be defined and the design water flow rate is derived from the design load to be rejected by the condenser loop and the design loop delta T (Ref. Plant Sizing and Input for Design Calculations and Component Autosizing). If "Tower Performance Input Method" is specified as "Nominal Capacity", then this field must be left blank since the model automatically assumes a design water flow rate of 5.382E-8 m3/s per watt (3 gpm/ton) of tower capacity specified in the field "Tower High-Speed Nominal Capacity".

Field: Air Flow Rate at High Fan Speed

This numeric field contains the tower air flow rate at high fan speed in m^3/s. A value greater than zero must be defined regardless of the tower performance input method. Alternately, this field can be autosized. If autosized, the design air flow rate is calculated as follows:

$$Air\ Flow\ Rate\ at\ High\ Fan\ Speed = \frac{0.5\rho_{air}\,(Fan\ Power\ at\ High\ Fan\ Speed\ )}{190.}$$

where a fan pressure rise of 190 Pascals and total fan efficiency of 0.5 are assumed.

Field: Fan Power at High Fan Speed

This numeric field contains the fan power (in Watts) at the high-speed air flow rate specified in the previous field. A value greater than zero must be specified regardless of the tower performance input method, or this field can be autosized. If autosized, the fan power is calculated as follows:

If “Tower Performance Input Method” is specified as “*UA and Design Water Flow Rate*”, then

$$Fan\ power_{High\ Fan\ Speed} = 0.0105 \bullet \rho_{water} \bullet C_{p,water} \bullet Design\ Water\ Flow\ Rate \bullet Design\ Loop \Delta T$$

is used.

If “Tower Performance Input Method” is specified as “*Nominal Capacity*”, then

$$Fan\ power_{High\ Fan\ Speed} = 0.0105 \bullet Tower\ High-Speed\ Nominal\ Capacity$$

is used.

Field: Tower UA Value at High Fan Speed

This numeric field contains the heat transfer coefficient-area product (UA) in watts per degree Celsius corresponding to the high-speed air flow rate and design water flow rate specified above. If the input field “Tower Performance Input Method” is specified as “UA and Design Water Flow Rate”, then a UA value greater than zero but less than or equal to 300,000 must be defined, or the field can be autosized. If autosized, a Plant Sizing object must be defined and the tower UA value at high fan speed is derived from the design load to be rejected by the condenser loop and the design loop delta T (Ref. Plant Sizing and Input for Design Calculations and Component Autosizing), assuming a tower water inlet temperature of 35C and tower inlet air at 35C drybulb/25.6C wetbulb. If “Tower Performance Input Method” is specified as “Nominal Capacity”, then this field must be left blank since the model automatically calculates the tower UA based on the capacity specified in the field “Tower High-Speed Nominal Capacity”.

Field: Air Flow Rate at Low Fan Speed

This numeric field contains the tower air flow rate at low fan speed in m^3/s. This value must be greater than zero, less than the value specified for the field “Air Flow Rate at High Fan Speed”, and greater than the value specified for the field “Air Flow Rate in Free Convection Regime”. This field may be autosized, in which case it is set to 50% of the “Air Flow Rate at High Fan Speed”.

Field: Fan Power at Low Fan Speed

This numeric field contains the fan power (in Watts) at the low-speed air flow rate specified in the previous field. This value must be specified greater than zero or the field may be autosized, in which case it is set to 16% of the “Fan Power at High Fan Speed”.

Field: Tower UA Value at Low Fan Speed

This numeric field contains the heat transfer coefficient-area product (UA) in watts per degree Celsius corresponding to the design water flow rate and low-speed air flow rate specified above. If the input field “Tower Performance Input Method” is specified as “UA and Design Water Flow Rate”, this value must be greater than zero but less than or equal to 300,000, less than the value specified for the field “Tower UA Value at High Fan Speed”, and greater than the value specified for the field “Tower UA Value at Free Convection Flow Rate”. This field may be autosized, in which case it is set to 60% of the “Tower UA Value at High Fan Speed”. If “Tower Performance Input Method” is specified as “Nominal Capacity”, then this field must be left blank since the model automatically calculates the tower UA based on the tower capacity specified in the field “Tower Low-Speed Nominal Capacity”.

Field: Air Flow Rate in Free Convection Regime

This numeric field contains the air flow rate (m^3/s) when the tower is in the "free convection" regime (water flow exists but tower fan is turned off). This value must be less than the value specified for the field "Air Flow Rate at Low Fan Speed". This field may be autosized, in which case it is set to 10% of the "Air Flow Rate at High Fan Speed". If the user does not wish to model "free convection" and is using the Tower Performance Input Method "UA and Design Water Flow", then this field should be set to 0.0. If the user specifies the Tower UA Value at Free Convection Air Flow Rate or Tower Free Convection Capacity as a value greater than zero, then the free convection air flow rate must be specified greater than 0.0.

Field: Tower UA Value at Free Convection Air Flow Rate

This numeric field contains the heat transfer coefficient-area product (W/°C) when the tower is in the "free convection" regime (water flow exists but tower fan is turned off). This value must be less than the value specified for the field "Tower UA Value at Low Fan Speed". This field may be autosized, in which case it is set to 10% of the "Tower UA Value at High Fan Speed". If the user does not wish to model "free convection" and is using the Tower Performance Input Method "UA and Design Water Flow", then this field should be set to 0.0. If "Tower Performance Input Method" is specified as "Nominal Capacity", then this field must be left blank since the model automatically calculates the tower UA based on the tower capacity specified in the field "Tower Free Convection Capacity".

Field: Tower Performance Input Method

This alpha field contains the method by which the user will specify tower performance: "UA and Design Water Flow Rate" or "Nominal Capacity". If this field is left blank in the input data file, the default input method is assumed to be "Nominal Capacity". If the method "UA and Design Water Flow Rate" is selected, then the user must enter UA values, design water flow rate and air flow rates as described for the previous input fields. If the method "Nominal Capacity" is selected then the fields "Design Water Flow Rate", "Tower UA Value at High Fan Speed", "Tower UA Value at Low Fan Speed" and "Tower UA Value at Free Convection Air Flow Rate" must be left blank, but the fields "Tower High-Speed Nominal Capacity", "Tower Low-Speed Nominal Capacity" and "Tower Free Convection Capacity" must be entered as described below.

Field: Tower High-Speed Nominal Capacity

This numeric input field contains the "nominal" heat rejection capacity of the cooling tower in watts under high-speed fan operation, with entering water at 35C (95F), leaving water at 29.4C (85F), entering air at 25.6C (78F) wetbulb and 35C (95F) drybulb temperatures. The design water flow rate is assumed to be 5.382E-8 m^3/s per watt of high-speed nominal capacity (3 gpm/ton). 125% of this nominal tower capacity gives the actual tower heat rejection at these operating conditions (based on historical assumption that the tower must dissipate 0.25W of compressor heat for every watt of heat removed by the evaporator).

Field: Tower Low-Speed Nominal Capacity

This numeric input field contains the "nominal" heat rejection capacity of the cooling tower in watts under low-speed fan operation, with entering water at 35C (95F), leaving water at 29.4C (85F), entering air at 25.6C (78F) wetbulb and 35C (95F) drybulb temperatures. The design water flow rate is assumed to be 5.382E-8 m^3/s per watt of high-speed nominal tower capacity (input field above). 125% of this nominal tower capacity gives the actual tower heat rejection at these operating conditions (based on historical assumption that the tower must dissipate 0.25W of compressor heat for every watt of heat removed by the evaporator). The value specified for this field must be greater than zero but less than the value specified for the field "Tower High-Speed Nominal Capacity".

Field: Tower Free Convection Capacity

This numeric input field contains the "nominal" heat rejection capacity of the cooling tower in watts when the tower is in the "free convection" regime (water flow exists but tower fan is turned off), with entering water at 35C (95F), leaving water at 29.4C (85F), entering air at 25.6C (78F) wetbulb and 35C (95F) drybulb temperatures. The design water flow rate is assumed to be 5.382E-8 m^3/s per watt of high-speed nominal tower capacity (input field above). 125% of this free convection tower capacity gives the actual tower heat rejection at these operating conditions (based on historical assumption that the tower must dissipate 0.25W of compressor heat for every watt of heat removed by the evaporator). The value specified for this field must be less than the value specified for the field "Tower Low-Speed Nominal Capacity". If the user does not wish to model "free convection", then this field should be set to 0.0. If the user specifies a value greater than zero, then the "Air Flow Rate in Free Convection Regime" field must contain a value greater than zero.

Two examples of an IDF specification for this object are shown below:

```
COOLING TOWER:TWO SPEED,
   My Tower,                       ! Tower name
   Condenser Tower Inlet Node,     ! Water inlet node name
   Condenser Tower Outlet Node,    ! Water outlet node name
   .0011,                          ! Design water flow rate, m3/s
   16.0,                           ! Air flow rate at high fan speed, m3/s
   10000,                          ! Fan power at high fan speed, W
   3500.,                          ! Tower UA at high fan speed, W/C
   8.0,                            ! Air flow rate at low fan speed, m3/s
   1600,                           ! Fan power at low fan speed, W
   2100.,                          ! Tower UA at low fan speed, W/C
   1.6,                            ! Air flow rate for free convection, m3/s
   350,                            ! Tower UA at free convection air flow, W/C
   UA AND DESIGN WATER FLOW RATE;  ! Tower performance input method
```

```
COOLING TOWER:TWO SPEED,
   My Tower,                       ! Tower name
   Condenser Tower Inlet Node,     ! Water inlet node name
   Condenser Tower Outlet Node,    ! Water outlet node name
   ,                               ! Design water flow rate, m3/s
   autosize,                       ! Air flow rate at high fan speed, m3/s
   1000,                           ! Fan power at high fan speed, W
   ,                               ! Tower UA at high fan speed, W/C
   autosize,                       ! Air flow rate at low fan speed, m3/s
   160,                            ! Fan power at low fan speed, W
   ,                               ! Tower UA at low fan speed, W/C
   autosize,                       ! Air flow rate for free convection, m3/s
   ,                               ! Tower UA at free convection air flow, W/C
   NOMINAL CAPACITY,               ! Tower performance input method
   95250.,                         ! Tower high-speed nominal capacity, W
   57150.,                         ! Tower low-speed nominal capacity, W
   9525.;                          ! Tower free convection capacity, W
```

Cooling Tower:Two Speed Outputs

```
HVAC,Average,Tower Fan Electric Power [W]
HVAC,Sum,Tower Fan Electric Consumption [J]
Zone,Meter,HeatRejection:Electricity [J]

HVAC,Average,Tower Heat Transfer [W]

HVAC,Average,Tower Water Inlet Temp [C]
HVAC,Average,Tower Water Outlet Temp [C]
HVAC,Average,Tower Water Mass Flow Rate [kg/s]
```

Tower Fan Electric Power [W]

Tower Fan Electric Consumption [J]

These outputs are the electric power input to the tower fans. Consumption is metered on HeatRejection:Electricity, Electricity:Plant, and Electricity:Facility.

Tower Heat Transfer [W]

This is the rate at which heat is removed from the condenser water loop by the tower.

Tower Water Inlet Temp [C]

Tower Water Outlet Temp [C]

Tower Water Mass Flow Rate [kg/s]

These outputs are the tower water inlet and outlet temperatures, and mass flow rate.

Ground Heat Exchanger:Vertical

The Energy Plus Ground loop heat exchanger is a condenser component. This serves the condenser supply side in addition to the cooling towers and other condensing components. The following figure shows the Ground Heat Exchanger in the Energy Plus simulation environment.

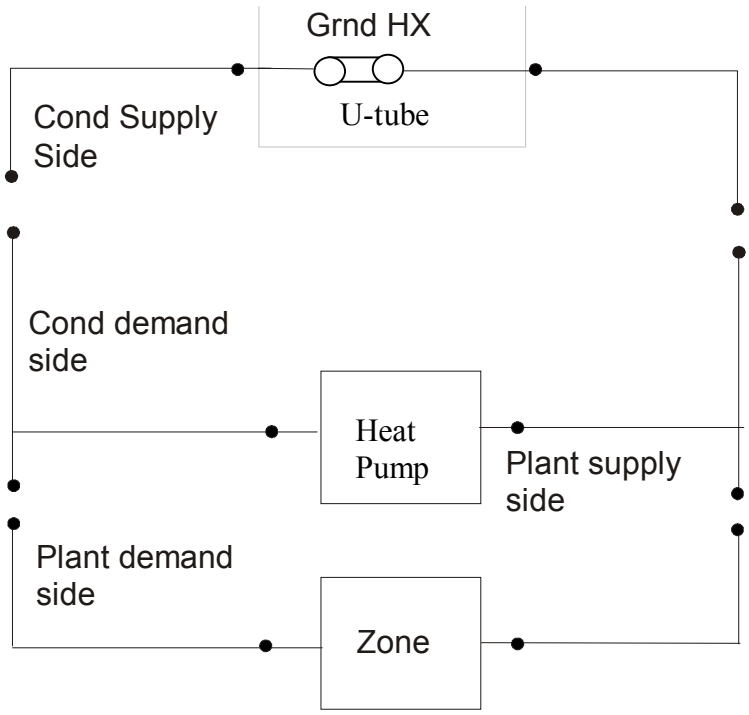

Figure 44. Schematic of EnergyPlus Ground Loop Heat Exchanger

The syntax to the specification of Bore hole ,U-tube and ground are shown in the example . The definition of GHE includes number G-function and LNTTS pairs as well. The data definition for the ground loop heat exchanger from the Energy+.idd is shown below.

```
GROUND HEAT EXCHANGER:VERTICAL,
  A1,   \field Ground Heat Exchanger Name
        \required-field
  A2,   \field GHE Inlet Node
  A3,   \field GHE Outlet Node
  N1,   \field Max GHE FlowRate
  N2,   \field Number of Boreholes
  N3,   \field Bore Hole Length
  N4,   \field Bore Hole Radius
  N5,   \field K of Ground
  N6,   \field rhoCp of Ground
        \units J/m3k
  N7,   \field rhoCp of Fluid
        \units KJ/m3k same order
  N8,   \field Temp. of Ground
        \units C
```

```
N9,   \field Design GHE Flowrate
N10,  \field K of Grout
N11,  \field K of Pipe
N12,  \field K of Fluid
N13,  \field Rho of Fluid
N14,  \field Nu of Fluid
N15,  \field Pipe Out Diameter
N16,  \field U-Tube Distance
N17,  \field Pipe Thickness
N18,  \field Maximum length of simulation in years
N19,  \field Number of data pairs of the G function
N20,  \field LNTTS1
N21,  \field GFNC1
N22, N23,
N24, N25,
N26, N27,
N28, N29,
N30, N31,
N32, N33,
N34, N35,
N36, N37,
N38, N39,
N40, N41,
N42, N43,
N44, N45,
N46, N47,
N48, N49,
N50, N51,
N52, N53,
N54, N55,
N56, N57,
N58, N59,
N60, N61,
N62, N63,
N64, N65,
N66, N67,
N68, N69,
N60, N71,
N72, N73,
N74, N75,
N76, N77,
N78, N79,
N80, N81,
N82, N83,
N84, N85,
N86, N87,
N88, N89;  \field 35 PAIRS
```

Field: Name of Ground Heat Exchanger

This alpha field contains the identifying name for the ground heat exchanger.

Field: GHE Inlet node

This alpha field contains the ground heat exchanger inlet node name.

Field: GHE outlet node

This alpha field contains the ground heat exchanger outlet node name.

Field: Max GHE Flow Rate

This numeric field contains the GHE maximum design volumetric flow rate in cubic meters per seconds.

Field: Number of Boreholes

This numeric field contains the number of boreholes in the GHE installation.

Field: Borehole Length

This numeric field contains the length of the borehole in meters.

Field: Borehole Radius

This numeric field contains the radius of the borehole in meters.

Field: K of Ground

This numeric field contains the thermal conductivity of the ground in W/m-K.

FieldSet: RhoCp of Ground

This numeric field contains the thermal heat capacity of the Ground. J/m3-K

Field: RhoCp of Fluid

This numeric field contains the thermal heat capacity of the U-tube fluid in J/m3-K.

Field: Temp of Ground

This numeric field contains the far field temperature of the ground in °C

Field: Design GHE Flow Rate

This numeric field contains the design volumetric flow rate of the GHE.

Field: K of Grout

This numeric field contains the thermal conductivity of the filler material in W/m-K.

Field: K of Pipe

This numeric field contains the thermal conductivity of the pipe in W/m-K.

Field: K of Fluid

This numeric field contains the thermal conductivity of the U-tube fluid in W/m-K.

Field: Rho of Fluid

This numeric field contains the density of the U-tube fluid in kilograms per cubic meter.

Field: Nu of Fluid

This numeric field contains the viscosity of the U-tube fluid in N.s/m2.

Field: Pipe Out Diameter

This numeric field contains the outer diameter of the U-tube (pipe) in meters.

Field: U-Tube Distance

This numeric field contains the distance between the two legs of the U-tube in meters.

Field: Pipe Thickness

This numeric field contains the outer diameter of the U-tube (pipe) in meters.

Field: Maximum Length of Simulation

This numeric field contains the maximum number of years of simulation to be carried out.

Field: Number of data pairs of G-function

This numeric field contains the number of G function-LNNTS pairs to be read in.

Field: LNTTS1

This numeric field contains the natural log of time/steady state time.

Field: GFUCN1

This numeric field contains the G function of the corresponding LNTTS1.

```
GROUND HEAT EXCHANGER:VERTICAL, Vertical Ground Heat Exchanger,
        GHE Inlet Node,
        GHE Outlet Node,
         .0011,
        .250000E+03,
        .762000E+02,
        .635100E-01,
        .692300E+00,
        .234700E+07,
        .376830E+04,
        .322200E+02,
         .0011,
        .692300E+00,
        .391100E+00,
        .602300E+00,
        .998200E+03,
        .987975E-08,
        .266700E-01,
        .254000E-01,
        .241300E-03,
        1,
```

```
35,
-15.2996,  -0.348322,
-14.201,    0.022208,
-13.2202,   0.412345,
-12.2086,   0.867498,
-11.1888,   1.357839,
-10.1816,   1.852024,
-9.1815,    2.345656,
-8.6809,    2.593958,
-8.5,       2.679,
-7.8,       3.023,
-7.2,       3.32,
-6.5,       3.681,
-5.9,       4.071,
-5.2,       4.828,
-4.5,       6.253,
-3.963,     7.894,
-3.27,      11.82,
-2.864,     15.117,
-2.577,     18.006,
-2.171,     22.887,
-1.884,     26.924,
-1.191,     38.004,
-0.497,     49.919,
-0.274,     53.407,
-0.051,     56.632,
0.196,      59.825,
0.419,      62.349,
0.642,      64.524,
0.873,      66.412,
1.112,      67.993,
1.335,      69.162,
1.679,      70.476,
2.028,      71.361,
2.275,      71.79,
3.003,      72.511;
```

Example of GHE input

Ground Heat Exchanger:Pond

The pond heat exchanger model represents a shallow pond with submerged hydronic tubes through which the heat transfer fluid is circulated. The model represents a 'shallow' pond in that no attempt is made to model any stratification effects that may be present in deeper ponds.

This type of heat exchanger is intended to be connected to the supply side of a condenser loop, and can be used with any type of plant loop. The pond may be specified as the only heat exchanger on the condenser loop (as shown in Figure 45) or it may be connected in parallel with other condenser loop heat exchangers (such as cooling towers, ground surface heat exchangers) as shown in the second figure below.

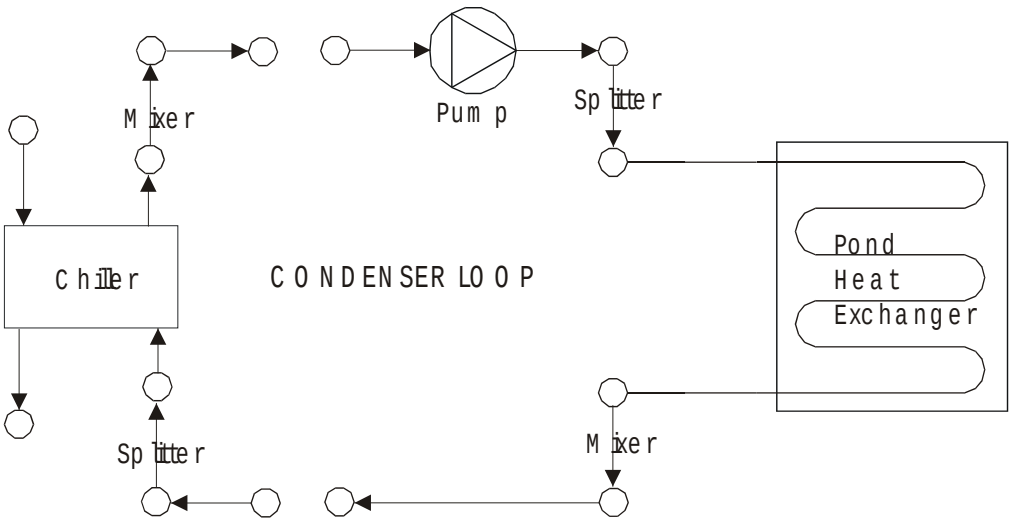

Figure 45. Example of Pond Ground Heat Exchanger as only heat exchanger on condenser loop

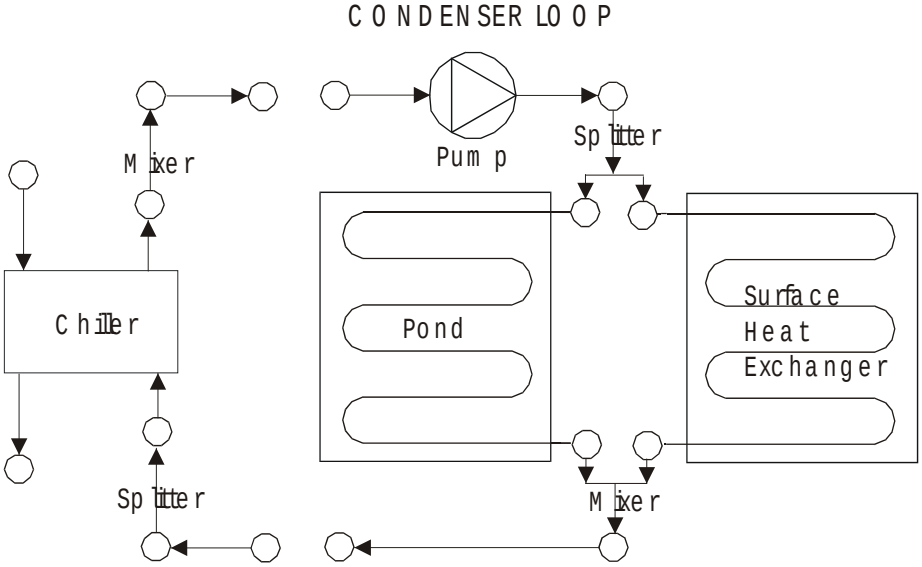

Figure 46. Pond Ground Heat Exchanger with other heat exchangers on condenser loop

Field: Name of Outside Pond Heat Exchanger

This alpha field contains the identifying name for the outside pond heat exchanger.

Field: Fluid Inlet Node

This alpha field contains the fluid inlet node name.

Field: Fluid Outlet Node

This alpha field contains the fluid outlet node name.

Field: Fluid Name

This alpha field contains the fluid name. This name will be validated against Fluid Names (ref: Fluid Properties section below) in the input file.

Field: Fluid/Glycol Concentration (Percentage)

This numeric field contains the fluid/glycol concentration in percentage.

Field: Pond Depth

This numeric field contains the pond depth in m.

Field: Pond Area

This numeric field contains the pond area in m^2.

Field: Hydronic Tubing Inside Diameter

This numeric field contains the hydronic tubing inside diameter in m.

Field: Hydronic Tubing Outside Diameter

This numeric field contains the hydronic tubing outside diameter in m.

Field: Hydronic Tubing Thermal Conductivity

This numeric field contains the hydronic tubing thermal conductivity in W/mK.

Field: Ground Thermal Conductivity

This numeric field contains the ground thermal conductivity in W/m^2K.

Field: Number of Hydronic Tubing Circuits (Total in Parallel in this Pond)

This numeric field contains the number of hydronic tubing circuits.

Field: Length of Each Hydronic Circuit

This numeric field contains length of each hydronic circuit.

```
GROUND HEAT EXCHANGER:POND,
        \memo A model of a shallow pond with imersed pipe loops.
        \memo Typically used in hybrid geothermal systems and included in the condenser loop.
        \memo This component may also be used as a simple solar collector.
   A1 , \field name of outside pond heat exchanger
        \required-field
   A2 , \field Fluid inlet node
        \type alpha
        \required-field
   A3 , \field Fluid outlet node
        \required-field
        \type alpha
   A4,  \field Fluid name
        \note (water, ethylene glycol, etc.) - validated with Fluids included in input file
        \type object-list
        \object-list FluidNames
        \type alpha
        \required-field
        \default water
   N1 , \field fluid/glycol concentration
        \required-field
        \type real
        \units percent
        \minimum 0
        \maximum 100
   N2 , \field pond depth
        \required-field
        \type real
        \units m
        \minimum> 0
   N3 , \field pond area
        \required-field
        \type real
        \units m2
        \minimum> 0
   N4 , \field Hydronic tubing inside diameter
        \required-field
        \type real
        \units m
        \minimum> 0
   N5 , \field Hydronic tubing outside diameter
        \required-field
        \type real
        \units m
        \minimum> 0
   N6 , \field Hydronic tubing thermal conductivity
        \required-field
        \type real
        \units W/mK
        \minimum> 0
   N7 , \field Ground thermal conductivity
        \required-field
        \type real
        \units W/m2K
        \minimum> 0
   N8 , \field Number of hydronic tubing circuits (total in parallel in this pond)
        \required-field
        \type integer
        \minimum 1
   N9 ; \field Length of each hydronic circuit
        \required-field
        \type real
        \minimum 0
```

An example of the IDF is shown below.

```
GROUND HEAT EXCHANGER:POND,
            Pond 1,
            Condenser Tower 1 Inlet Node, ! Inlet_Node
            Condenser Tower 1 Outlet Node,! Outlet_Node
            Water,                        ! Fluid Name
            0.0,                          ! Concentration
            0.5,                          ! Depth
            200.0,                        ! Area
            0.02,                         ! Tube ID
            0.025,                        ! Tube OD
            0.4,                          ! Pipe Conductivity
            1.0,                          ! Ground Conductivity
            10,                           ! Number of Circuits
            50.0;                         ! Length of Each Circuit
```

Pond Heat Exchanger Outputs

```
HVAC,Average,Pond Ground Heat Exchanger Heat Transfer Rate[W]
HVAC,Sum,Pond Ground Heat Exchanger Energy[J]
HVAC,Average,Pond Ground Heat Exchanger Mass Flow Rate[kg/s]
HVAC,Average,Pond Ground Heat Exchanger Inlet Temp[C]
HVAC,Average,Pond Ground Heat Exchanger Outlet Temp[C]
HVAC,Average,Pond Ground Heat Exchanger Bulk Temp[C]
```

Pond Ground Heat Exchanger Heat Transfer Rate [W]

Pond Ground Heat Exchanger Energy [J]

These outputs are the pond ground heat exchanger heat transfer rate and total energy exchange for the time step.

Pond Ground Heat Exchanger Mass Flow Rate [kg/s]

Pond Ground Heat Exchanger Inlet Temp [C]

Pond Ground Heat Exchanger Outlet Temp [C]

These outputs are the pond fluid inlet and outlet temperatures and mass flow rate.

Pond Ground Heat Exchanger Bulk Temp [C]

This output is the pond bulk temperature.

Ground Heat Exchanger:Surface

The surface heat exchanger model is to simulate hydronic surface ground heat exchangers. This includes pavement surfaces with embedded pipes for snow-melting or heat rejection from hybrid ground source heat pump systems.

The heat exchanger may be ground coupled or not. In the latter case the bottom surface is exposed to the wind but not solar gains. This type of heat exchanger is intended to be connected to the supply side of a condenser loop, and can be used with any type of plant loop. The surface heat exchanger may be specified as the only heat exchanger on the condenser loop (as shown in the first figure below) or it may be connected in parallel with other condenser loop heat exchangers (such as cooling towers, ground surface heat exchangers) as shown in the second figure below.

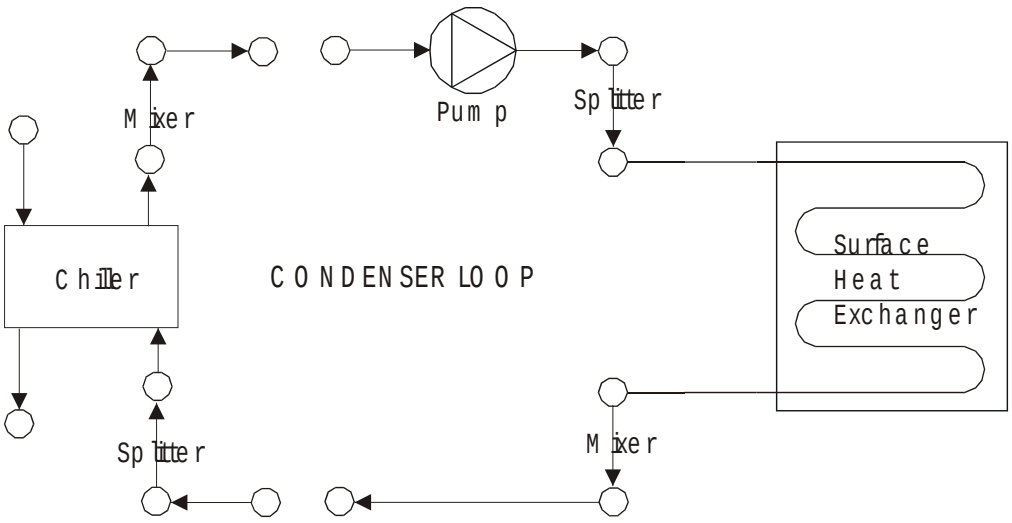

Figure 47. Example of Surface Ground Heat Exchanger as only heat exchanger on condenser loop

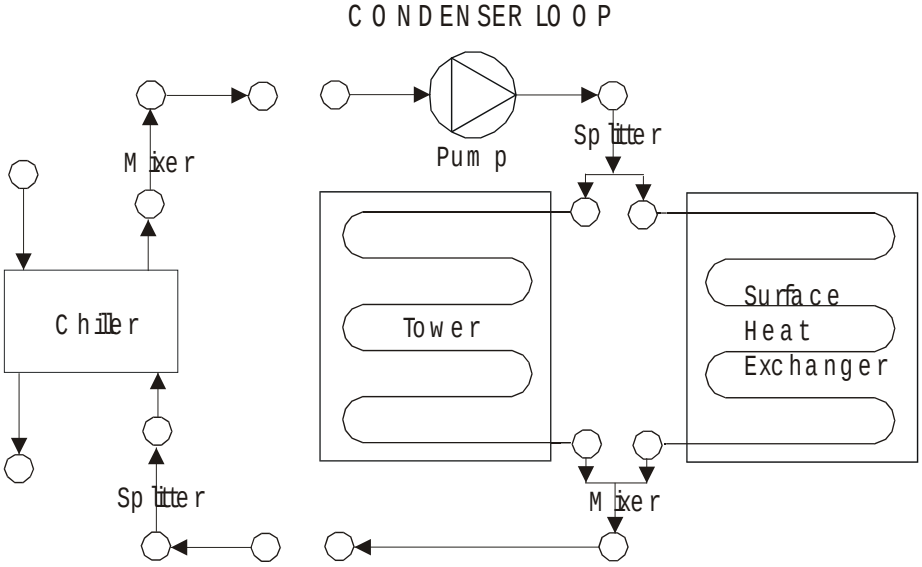

Figure 48. Surface Ground Heat Exchanger with other heat exchangers on condenser loop

Field: Name of Outside Panel Heat Exchanger

This alpha field contains the identifying name for the outside panel heat exchanger.

Field: Construction Name

This alpha field contains the construction name. It must contain a valid “Construction” name that is usual for Surfaces. (Ref: Group – Surface Construction Elements).

Field: Fluid Inlet Node

This alpha field contains the fluid inlet node name.

Field: Fluid Outlet node

This alpha field contains the fluid outlet node name.

Field: Fluid Name

This alpha field contains the fluid name. This name will be validated against Fluid Names (ref: Fluid Properties section below) in the input file.

Field: Hydronic Tubing Inside Diameter

This numeric field contains the hydronic tubing inside diameter in m.

Field: Number of Hydronic Tubing Circuits

This numeric field contains the number of hydronic tubing circuits.

Field: Hydronic Tube Spacing

This numeric field contains the hydronic tube spacing in m.

Field: Surface Length

This numeric field contains the surface length in m.

Field: Surface Width

This numeric field contains the surface width in m.

Field: Lower Surface Environment

This alpha field expresses the lower surface exposure: Exposed or Ground.

```
GROUND HEAT EXCHANGER:SURFACE,
    \memo A hydronic surface/panel consisting of a multi-layer construction with embedded rows of tubes.
    \memo Typically used in hybrid geothermal systems and included in the condenser loop.
    \memo This component may also be used as a simple solar collector.
    \memo The bottom surface may be defined as ground-coupled or exposed to wind (bridge deck).
   A1 , \field name of outside panel heat exchanger
        \required-field
   A2 , \field Construction name
        \required-field
        \type object-list
        \object-list ConstructionNames
   A3 , \field Fluid inlet node
        \type alpha
        \required-field
   A4 , \field Fluid outlet node
        \required-field
        \type alpha
   A5,  \field Fluid name
        \note (water, ethylene glycol, etc.) -- validated with Fluids included in input file
        \type object-list
        \object-list FluidNames
        \required-field
        \default water
   N1 , \field Hydronic tubing inside diameter (spacing and depth are defined in the construction data)
        \type real
        \units m
        \minimum> 0
   N2 , \field Number of hydronic tubing circuits (total in parallel in this panel)
        \type integer
        \minimum 1
   N3 , \field Hydronic tube spacing (center-to-center distance)
        \type real
        \minimum> 0.0
   N4 , \field surface length
        \type real
        \units m
        \minimum> 0.0
   N5 , \field surface width
        \type real
        \units m
        \minimum> 0.0
   A6 ; \field Lower surface environment
        \type choice
        \key GROUND
        \key EXPOSED
        \default GROUND
```

An example of this statement in an IDF is shown below:

```
GROUND HEAT EXCHANGER:SURFACE,
            SURFACE 1,
            Outside Surface Construction,
            Condenser Tower 1 Inlet Node, ! Inlet_Node
            Condenser Tower 1 Outlet Node,! Outlet_Node
            Water,                        ! Fluid Name
            0.02,                         ! Tube ID
            10.0,                         ! Tube Circuits
            0.3,                          ! Tube Spacing
            10.0,                         ! Surface Length
            20.0,                         ! Surface Width
            EXPOSED;                      ! Lower Surface Environment
```

Surface Heat Exchanger Outputs

```
HVAC,Average,Surface Ground Heat Exchanger Heat Transfer Rate[W]
HVAC,Average,Surface Ground Heat Exchanger Surface Heat Transfer Rate[W]
```

```
HVAC,Sum,Surface Ground Heat Exchanger Energy[J]
HVAC,Average,Surface Ground Heat Exchanger Mass Flow Rate[kg/s]
HVAC,Average,Surface Ground Heat Exchanger Inlet Temp[C]
HVAC,Average,Surface Ground Heat Exchanger Outlet Temp[C]
HVAC,Average,Surface Ground Heat Exchanger Top Surface Temp[C]
HVAC,Average Surface Ground Heat Exchanger Bottom Surface Temp[C]
HVAC,Average,Surface Ground Heat Exchanger Top Surface Flux [J/m2]
HVAC,Average,Surface Ground Heat Exchanger Bottom Surface Flux[J/m2]
HVAC,Sum,Surface Ground Heat Exchanger Surface Energy[J]
HVAC,Average,Surface Ground Heat Exchanger Source Temp[C]
```

Surface Ground Heat Exchanger Heat Transfer Rate [W]

Surface Ground Heat Exchanger Surface Heat Transfer Rate [W]

Surface Ground Heat Exchanger Energy [J]

These outputs are the source heat transfer rate, surface heat transfer rate and the total source energy input for the time step.

Surface Ground Heat Exchanger Mass Flow Rate [kg/s]

Surface Ground Heat Exchanger Inlet Temp [C]

Surface Ground Heat Exchanger Outlet Temp [C]

These outputs are the surface heat exchanger fluid inlet and outlet temperatures and mass flow rate.

Surface Ground Heat Exchanger Top Surface Temp [C]

Surface Ground Heat Exchanger Bottom Surface Temp [C]

These outputs are the surface heat exchanger top and bottom surface temperatures.

Surface Ground Heat Exchanger Top Surface Flux [J/m^2]

Surface Ground Heat Exchanger Bottom Surface Flux [J/m^2]

These outputs are the surface heat exchanger top and bottom surface flux.

Surface Ground Heat Exchanger Surface Energy [J]

This is the total surface energy exchange for the time step.

Surface Ground Heat Exchanger Source Temp [C]

This is the surface heat exchanger source temperature.

Group – Plant-Condenser Flow Control

The connector list described above determines how the branches of a particular loop will be hooked together. These connections can be classified either as a separation of a single stream into several outlet streams (splitter) or the merging of several streams into a single outlet stream (mixer). Due to the limitation per branch of a single splitter and a single mixer, the connector list can only have two pieces of equipment as a maximum. The names defined for either/both the splitter or/and the mixer refer then to “component” definitions as described below.

Splitter,Mixer

```
SPLITTER,
 ! [Split One Air/Water Stream Into N outlet streams]
   A1, \field SplitterName
   A2, \field Inlet Branch Name
       \reference Branches
   A3, \field Outlet Branch Name 1
       \reference Branches
   A4, \field Outlet Branch Name 2
       \reference Branches
   A5, \field Outlet Branch Name 3
       \reference Branches
   A6, \field Outlet Branch Name 4
       \reference Branches
-- reduced for brevity, up to 50 outlet branches allowed
MIXER,
 ! [Mix N inlet Air/Water Streams Into one]
   A1, \field MixerName
   A2, \field Outlet Branch Name
       \reference Branches
   A3, \field Inlet Branch Name 1
       \reference Branches
   A4, \field Inlet Branch Name 2
       \reference Branches
   A5, \field Inlet Branch Name 3
       \reference Branches
   A6, \field Inlet Branch Name 4
       \reference Branches
-- reduced for brevity, up to 50 inlet branches allowed
```

The format of both the SPLITTER and MIXER statements is the same. Both begin with an identifying name followed by the branch name of the “single side” of the component. In the case of the splitter, this is the inlet since the inlet stream is broken into several outlet streams. In the case of the mixer, this is the outlet since several streams are mixed together to form a single outlet. The remaining list of up to 50 names is simply the branch names of the outlet legs in the case of the splitter and inlet legs in the case of the mixer. No control logic is assume in these components—a determination of how much air to split in which direction using the splitter must be defined by other components.

Splitter

Field: SplitterName

This alpha field contains the identifying name for the Splitter.

Field: Inlet Branch Name

This alpha field contains the identifying name for the Splitter Inlet Branch.

Field: Outlet Branch Name 1

This alpha field contains the identifying names for the Splitter Outlet Branches.

Mixer

Field: MixerName

This alpha field contains the identifying name for the Mixer.

Field: Outlet Branch Name

This alpha field contains the identifying name for the Mixer Outlet Branch.

Field: Inlet Branch Name 1

This alpha field contains the identifying names for the Mixer Inlet Branches.

An example of these statements in an IDF is:

```
SPLITTER,
         CW Loop Splitter,
         CW Pump Branch,
         Little Chiller Branch,
         Big Chiller Branch,
         Purchased Cooling Branch,
         Supply Bypass Branch;
MIXER,
         CW Loop Mixer,
         Cooling Supply Outlet,
         Little Chiller Branch,
         Big Chiller Branch,
         Purchased Cooling Branch,
         Supply Bypass Branch;
```

Group – Air Distribution

Air Primary Loop

Air loops along with zone equipment form the entire forced air heating and cooling system (air side). The main statement for defining an air loop is the *Air Primary Loop* object described here. As with the main plant and condenser statements, several of the items in the Air Primary Loop object definition are actually names that refer to other objects in the input file. After the Air Primary Loop object title and identifying name, four such list pointers are encountered: for controllers, system availability, branches, and connectors. The Controller List defines how the air loop will respond due to various inputs (control signals). The System Availability Manager list refers to methods for controlling when a system is operational. This may be as simple as a schedule to define when the system is shutdown. The Branch List lists the branches that comprise the primary air system. Finally, the Connector List lists the connections between the branches. The branches and connections together define the primary air system topology.

The only numeric input is the design primary airflow rate. This item is input just before the Branch List name.

The next series of names refer to nodes for the various inlet and outlet points of the air loop. The air loop starts where the zone equipment ends. This is a single point consisting of the return air duct once all of the zone return air streams have been collected. While in reality, there is really only one point, for clarity within the simulation components and consistency with the other HVAC loop sections, this point in the systems is defined as two points: one that resides with the zone equipment simulation and one that is acted upon by the air loop simulation. Both node names must be entered into the input file, and both nodes must have unique names. Similarly, the end points of the air loop that also correspond to the beginning points of the zone equipment loop must also be defined. These consist of names referencing lists of up to three pairs of node names as shown below. Up to three air loop outlets are allowed to accommodate the simulation of three deck systems.

Field: Primary Air Loop Name

This field is a unique, user assigned name for a single instance of an Air Primary Loop object. Any other object referencing this Air Primary Loop will use this name.

Field: Name: Controller List

This field is the name of a Controller List object. A Controller List is simply a list of controllers giving both controller name and type. This Controller List specifies all the controllers that will act on this primary air loop. The order of the controllers in the list is significant: controllers are simulated sequentially in the order given in the Controller List.

Field: Name: System Availability Manager List

This field is the name of a System Availability Manager List object. A System Availability Manager List is a list of System Availability Managers giving both System Availability Manager type and name. The system availability managers in the list apply to this primary air loop. That is, they determine when and if this air loop is on or off, overriding the control provided by the central fan on/off schedule.

Field: Primary air design volumetric flow rate

This is the system primary air design volumetric flow rate in cubic meters per second.

Field: Air Loop Branch List Name

This field is the object name of a Branch List object (see Branch List and Branch). The Branch List named here specifies all the branches composing the primary air system. These branches, together with the Connectors listed in the Connector List, define the primary air system topology.

Field: Air Loop Connector List Name

This field is the name of Connector List object. This Connector List object lists all the Connectors (by type and name) that are included in this primary air system. These Connectors, together with the Branches in the Branch List, define the topology of the primary air system.

Field: ReturnAir AirLoop Inlet Node

The name of the air entrance node of this primary air system. This is the inlet node for return air for this air system.

Field: ZoneEquipGroup Outlet Node

The name of the air outlet node for the zone equipment group (Controlled Zone Equip Configuration objects) attached to the primary air system. This should be the outlet node of a Zone Mixer in the Zone Return Air Path for the zone equipment group attached to this primary air system.

Field: SupplyAirPath ZoneEquipGroup Inlet Nodes

The name of a Node List (see Node List) listing up to three nodes which are the air inlet nodes for the zone equipment group (Controlled Zone Equip Configuration objects) attached to this primary air system. These nodes should be the inlet nodes to the Zone Splitters in the Zone Supply Air Path for the zone equipment group attached to this primary air system.

Field: AirLoop Outlet Nodes

The name of a Node List (see Node List) listing the nodes that are the air outlet nodes of this primary air system. The list can contain the names of up to three nodes.

The IDD specification:

```
AIR PRIMARY LOOP,
       \min-fields 10
       \memo Defines a central forced air system
   A1, \field Primary Air Loop Name
       \required-field
       \type alpha
       \reference AirPrimaryLoops
   A2, \field Name: Controller List
       \type object-list
       \object-list ControllerLists
   A3, \field Name: System Availability Manager List
       \type object-list
       \object-list SystemAvailabilityManagerLists
   N1, \field Primary air design volumetric flow rate
       \default 0
       \units m3/s
       \autosizable
   A4, \field Air Loop Branch List Name
       \note Name of a Branch List containing all the Branches in this Air loop
       \required-field
       \type object-list
       \object-list BranchLists
   A5, \field Air Loop Connector List Name
       \note Name of a Connector List containing all the splitters and mixers in the loop
       \type object-list
       \object-list ConnectorLists
   A6, \field ReturnAir AirLoop Inlet Node
       \note Name of ReturnAir AirLoop Inlet Node
   A7, \field ZoneEquipGroup Outlet Node
       \note Name of ZoneEquipGroup Outlet Node
   A8, \field SupplyAirPath ZoneEquipGroup Inlet Nodes
       \note Name of a Node List containing the SupplyAirPath ZoneEquipGroup Inlet Nodes
   A9; \field AirLoop Outlet Nodes
       \note Name of a Node List containg the AirLoop Outlet Nodes
```

An example of this statement in an IDF is:

```
AIR PRIMARY LOOP,
  Main Dual Duct Air Loop,           ! Primary Air Loop Name
  Dual Duct System 1 Controllers,    ! Controller List
  Dual Duct System 1 Schedule List , ! System Availability Manager List
  1.3 ,                              ! Primary air design volumetric flow rate
  Dual Duct Air Loop Branches ,      ! Air Loop Branch List Name
  Dual Duct Connectors ,             ! Air Loop Connector List Name
  Supply Fan Inlet Node ,            ! ReturnAir AirLoop Inlet Node
  Return Air Mixer Outlet ,          ! ZoneEquipGroup Outlet Node
  Zone Equipment Inlet Node List ,   ! SupplyAirPath ZoneEquipGroup Inlet Nodes
  Air Loop Outlet Node List ;        ! AirLoop Outlet Nodes
```

A map for Air Loop input syntax is shown in the following diagram.

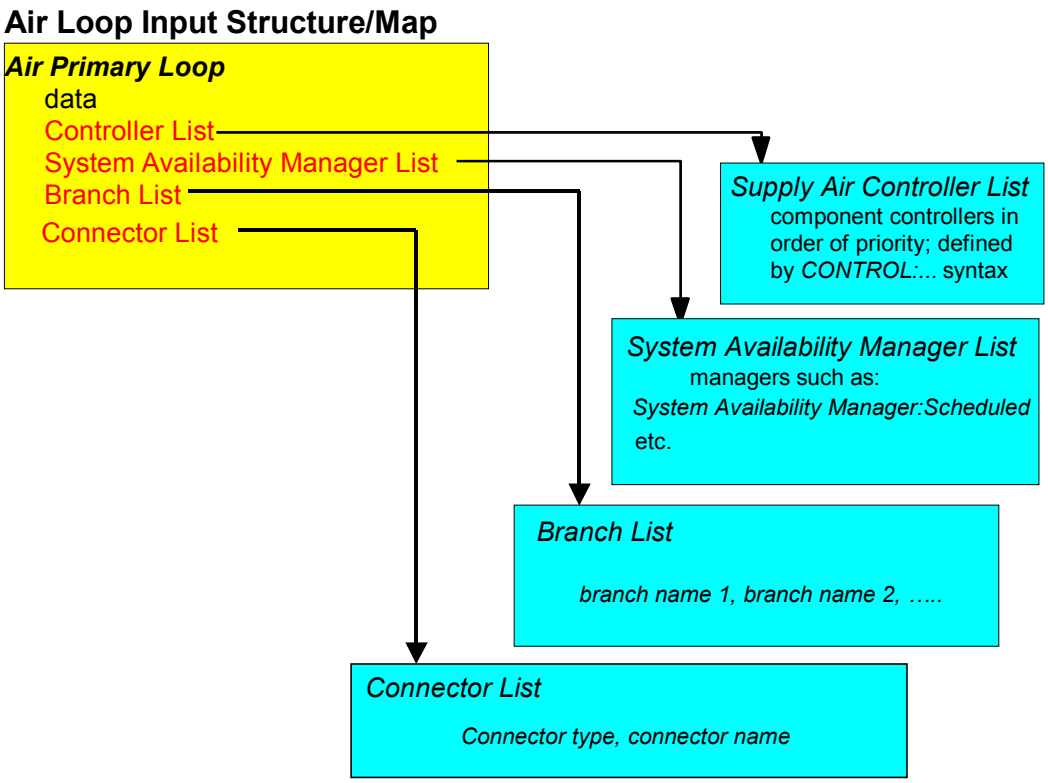

Figure 49. Air Loop Input Syntax Map

Controller List

The syntax for the controller list definition is shown below. As with other lists in EnergyPlus input, the object title and identifying name are followed by type-name pairs. In this case, the types are controller types. The order in which controllers appear on this list also define the priority as described below. The identifying name refers back to the name recorded in the AIR PRIMARY LOOP statement.

Field: Name

The user designated unique name of an instance of a Controller List. Any object referencing this Controller List will do so using this name.

Field Set (Key, Controller Name) up to 8

After the identifying name, input for the Controller List consists of up to 8 pairs of data items: a controller type and a controller name. The first controller listed has the highest priority, the second the second highest priority, and so forth.

Field: KEY--Controller 1

The type of controller. This should be a key word defining a class of controllers such as CONTROLLER:SIMPLE.

Field: Controller Name 1

The name of a controller object (such as a CONTROLLER:SIMPLE) defined elsewhere in the input file.

The IDD specification:

```
CONTROLLER LIST,
       \memo List controllers in order of control sequence
  A1 , \field Name
       \required-field
       \type alpha
       \reference ControllerLists
  A2 , \field Controller Type 1
       \required-field
       \type choice
       \key CONTROLLER:SIMPLE
       \key CONTROLLER:OUTSIDE AIR
  A3 , \field Controller Name 1
       \required-field
       \type object-list
       \object-list AirLoopControllers
  A4 , \field  Controller Type 2
       \type choice
       \key CONTROLLER:SIMPLE
       \key CONTROLLER:OUTSIDE AIR
  A5 , \field Controller Name 2
       \type object-list
       \object-list AirLoopControllers
-- etc to # of controller sets entered
```

An example of this statement in an IDF is:

```
CONTROLLER LIST,
           Dual Duct System 1 Controllers,
           Controller:Simple, Main Cooling Coil Controller,
           Controller:Simple, Main Heating Coil Controller;
```

System Availability Manager List

The syntax for the availability manager list is shown below. The identifying name must be referred to in the AIR PRIMARY LOOP statement shown above. Following the name, a list of management types and identifying name pairs are shown. These point to actual availability managers and are listed in order of priority (highest to lowest).

Field: Name

The user designated unique name of an instance of a System Availability Manager List. Any object referencing this System Availability Manager List will do so using this name.

Field Set (Key, Name) up to 3

After the identifying name, input for the System Availability Manager List consists of up to 3 pairs of data items: a System Availability Manager type and a System Availability Manager name. The first System Availability Manager listed has the highest priority, the second the second highest priority, and so forth.

Field: KEY--System Availability Manager

The type of System Availability Manager. This should be a key word defining a class of System Availability Managers such as :

SYSTEM AVAILABILITY MANAGER:NIGHT CYCLE.

Field: System Availability Manager name

The name of a System Availability Manager object (such as a SYSTEM AVAILABILITY MANAGER:NIGHT CYCLE) defined elsewhere in the input file.

The IDD specification:

```
SYSTEM AVAILABILITY MANAGER LIST,
       \min-fields 3
       \memo List System Availability Managers
  A1 , \field Name
       \type alpha
       \required-field
       \reference SystemAvailabilityManagerLists
  A2 , \field System Availability Manager type 1
       \required-field
       \type choice
       \key SYSTEM AVAILABILITY MANAGER:SCHEDULED
       \key SYSTEM AVAILABILITY MANAGER:NIGHT CYCLE
  A3 , \field System Availability Manager name 1
       \required-field
       \type object-list
       \object-list SystemAvailabilityManagers
  A4 , \field System Availability Manager type 2
       \type choice
       \key SYSTEM AVAILABILITY MANAGER:SCHEDULED
       \key SYSTEM AVAILABILITY MANAGER:NIGHT CYCLE
  A5 , \field System Availability Manager name 2
       \type object-list
       \object-list SystemAvailabilityManagers
  A6 , \field System Availability Manager type 3
       \type choice
       \key SYSTEM AVAILABILITY MANAGER:SCHEDULED
       \key SYSTEM AVAILABILITY MANAGER:NIGHT CYCLE
  A7 ; \field System Availability Manager name 3
       \type object-list
       \object-list SystemAvailabilityManagers
```

An example of this statement in an IDF is:

```
SYSTEM AVAILABILITY MANAGER LIST,
    VAV Sys 1 Avail List,
    SYSTEM AVAILABILITY MANAGER:NIGHT CYCLE, VAV Sys 1 Avail;
```

Outside Air System

The Outside Air System is a subsystem of an Air Primary Loop. It handles the mixed air portion of the primary air system: the system relief air, the outside air inlet, and any components and controllers associated with the system relief air and outside air streams. From the perspective of the Air Primary Loop the Outside Air System is treated as a single component. As a subsystem, it can contain one or more components and controllers.

The input for the Outside Air System consists of a system name, a controller list name, an equipment list name, and an availability manager list name. The controller list simply lists, by type and unique name, all the controllers in the subsystem. The controllers will be simulated in list order. The equipment list lists all the components in the subsystem, by type and name. The equipment is simulated in list order. Finally, the availability manager list gives the type and name of the availability managers used by the subsystem.

Field: Name

The unique, user assigned name for a single instance of an Outside Air System. Any other object referencing this Outside Air System will use this name.

Field: Name: Controller List

This field is the name of a Controller List object. A Controller List is simply a list of controllers giving both controller name and type. This Controller List specifies all the controllers that will act on this outside air system. The order of the controllers in the list is significant: controllers

are simulated sequentially in the order given in the Controller List. Typically the Controller List would contain a Controller:Outside Air.

Field: Air Loop Equipment List Name

This field is the name of an Air Loop Equipment List object. An Air Loop Equipment List is simply a list of components giving both component name and type. This Air Loop Equipment List specifies all the components that will be simulated in this outside air system. The order of the components in the list is significant: components are simulated sequentially in the order given in the Air Loop Equipment List. Typically the equipment list would contain at least an Outside Air Mixer.

Field: System Availability Manager List

This field is the name of a System Availability Manager List object. A System Availability Manager List is a list of System Availability Managers giving both System Availability Manager type and name.

The full IDD specification follows:

```
OUTSIDE AIR SYSTEM,
   A1, \field Name
       \required-field
       \type alpha
   A2, \field Name: Controller List
       \required-field
       \type object-list
       \object-list ControllerLists
   A3, \field Name of an Air Loop Equipment List
       \required-field
       \type object-list
       \object-list AirLoopEquipmentLists
   A4; \field Name of a System Availability Manager List
       \required-field
       \type object-list
       \object-list SystemAvailabilityManagerLists
```

An IDF example, including the Air Primary Loop, and the controller and equipment lists.

```
Air Primary Loop,Typical Terminal Reheat 1,
           Reheat System 1 Controllers,
           Reheat System 1 Avail List,
           1.3,
           Air Loop Branches,,
           Air Loop Inlet Node, Return Air Mixer Outlet,
           Zone Equipment Inlet Node, Air Loop Outlet Node;

    CONTROLLER LIST,
           Reheat System 1 Controllers,
           Controller:Simple, Main Cooling Coil Controller;

     BRANCH LIST, Air Loop Branches,
           Air Loop Main Branch;

     BRANCH, Air Loop Main Branch,
           1.3,
           OUTSIDE AIR SYSTEM, OA Sys 1,
           Air Loop Inlet Node, Mixed Air Node,PASSIVE
           FAN:SIMPLE:ConstVolume, Supply Fan 1,
           Mixed Air Node, Cooling Coil Air Inlet Node, ACTIVE,
           COIL:Water:DetailedFlatCooling, Detailed Cooling Coil,
           Cooling Coil Air Inlet Node, Air Loop Outlet Node, PASSIVE;

    SYSTEM AVAILABILITY MANAGER LIST, Reheat System 1 Avail List,
           SYSTEM AVAILABILITY MANAGER:SCHEDULED, Reheat System 1 Avail;

    SYSTEM AVAILABILITY MANAGER:SCHEDULED, Reheat System 1 Avail,
           FanAndCoilAvailSched;
```

```
OUTSIDE AIR SYSTEM,
       OA Sys 1,
       OA Sys 1 Controllers,
       OA Sys 1 Equipment,
       Reheat System 1 Avail List;

    CONTROLLER LIST,
           OA Sys 1 Controllers,
           CONTROLLER:OUTSIDE AIR, OA Controller 1;

    AIR LOOP EQUIPMENT LIST,
           OA Sys 1 Equipment,
           HEAT EXCHANGER:AIR TO AIR:FLAT PLATE,OA Heat Recovery 1,
           OUTSIDE AIR MIXER, OA Mixing Box 1;
```

Air Loop Equipment List

Used to specify the components in the outside air system. The components will be simulated in the order in which they occur in the list.

Field: Name

The user designated unique name of an instance of an Air Loop Equipment List. Any object referencing this Air Loop Equipment List will do so using this name.

Field Set (Key, Component Name) up to 8

After the identifying name, the Air Loop Equipment List consists of up to 8 pairs of data items:

Field: KEY – System Component

This field specifies the keyword for the type of component used.

Field: Component Name

This field is the unique name of the component specified in the previous field.

The IDD specification:

```
AIR LOOP EQUIPMENT LIST,
       \memo List equipment in simulation order
  A1 , \field Name
       \required-field
       \type alpha
       \reference AirLoopEquipmentLists
  A2 , \field KEY--System Component 1
       \required-field
  A3 , \field Component Name 1
       \required-field
  A4 , \field KEY--System Component 2
  A5 , \field Component Name 2
-- etc to # of sets entered
```

An example from an IDF:

```
AIR LOOP EQUIPMENT LIST,
           OA Sys 1 Equipment,
           HEAT EXCHANGER:AIR TO AIR:FLAT PLATE,OA Heat Recovery 1,
           OUTSIDE AIR MIXER, OA Mixing Box 1;
```

Outside Air Inlet Node List

The program needs to know which HVAC system nodes are inlets for outside air. Knowing this, the program can set the conditions at these nodes to the outdoor conditions at the start of each major time step. The Outside Air Inlet Node List provides the means for specifying which nodes are outside air nodes.

The input is flexible: there may be one or more Outside Air Inlet Node List in each input file. Each list contains up to 25 names. The names can be the name of a unique HVAC system node, or the name of a Node List which will contain the actual node names. Duplicate node names are ignored.

Field: Node name or Node List name

The name of an HVAC system node or of a Node List object. There can be up to 25 names.

The IDD specification:

```
OUTSIDE AIR INLET NODE LIST,
  A1, \field 1st Node name or node list name
        \required-field
      \type alpha
  A2, \field 2nd Node name or node list name
      \type alpha
  A3, \field 3rd Node name or node list name
      \type alpha
-- etc to # of node or node lists entered
```

An example IDF:

```
OUTSIDE AIR INLET NODE LIST,
    OutsideAirInletNodes;
    NODE LIST,OutsideAirInletNodes,
       Outside Air Inlet Node;
```

Outside Air Mixer

The Outside Air Mixer is the most common component used in an outside air system. The outside air mixer has 2 inlet air streams: the system return air and the outside air. It has 2 outlet air streams: the system relief air and the mixed air. This is a passive component. It takes the inlet mass flows and conditions plus the relief air mass flow and calculates the mixed air flow rate and conditions (as well as the relief air conditions). The inlet and relief mass flow must be set outside the component – most commonly by an outside air controller. The Outside Air Mixer can also be used in compound components such as a fan coil unit.

Input for this object is very simple: a unique name plus the node names of the 2 in let nodes and the 2 outlet nodes.

Field: Name

A unique user assigned name for a particular outside air mixer component. Any reference to this component by another object will use this name.

Field: Mixed_Air_Node

The name of the HVAC system node which is the outlet for the mixed air stream.

Field: Outside_Air_Stream_Node

The name of the HVAC system node which is the inlet for the outside air stream.

Field: Relief_Air_Stream_Node

The name of the HVAC system node which is the outlet for the system relief air.

Field: Return_Air_Stream_Node

The name of the HVAC system node which is the inlet for the return air stream.

The IDD specification:

```
OUTSIDE AIR MIXER,
  A1, \field Name
      \required-field
      \type alpha
  A2, \field Mixed_Air_Node
      \note Name of Mixed_Air_Node
      \required-field
  A3, \field Outside_Air_Stream_Node
      \note Name of Outside_Air_Stream_Node
      \required-field
  A4, \field Relief_Air_Stream_Node
      \note Name of Relief_Air_Stream_Node
      \required-field
  A5; \field Return_Air_Stream_Node
      \note Name of Return_Air_Stream_Node
      \required-field
```

An IDF example:

```
OUTSIDE AIR MIXER,
    Zone1WindACOAMixer,           ! name
    Zone1WindACOAMixerOutletNode, ! mixer outlet node
    Zone1WindACOAInNode,          ! mixer OA node
    Zone1WindACExhNode,           ! mixer relief node
    Zone1WindACAirInletNode;      ! mixer inlet node
```

Group – Zone Equipment

There are five main zone equipment statements that must be used to describe a block of zone equipment as shown in the below figure “Zone Equipment Input Syntax Map”.

Types of Zone equipment are listed below and shown in below figure “Zone Equipment”.

AIR DISTRIBUTION UNITs

Single Duct Constant Volume Reheat

Single Duct VAV Reheat

Dual Duct Constant Volume

Dual Duct VAV

Powered Induction Units (Series and Parallel)

LOCAL CONVECTIVE UNITs

Purchased Air

Direct Air

Fan Coil Units

Window AC

Unit Ventilator/Heater

RADIATIVE CONVECTIVE UNITs

Baseboard

Zone Equipment Loop Input Structure/Map

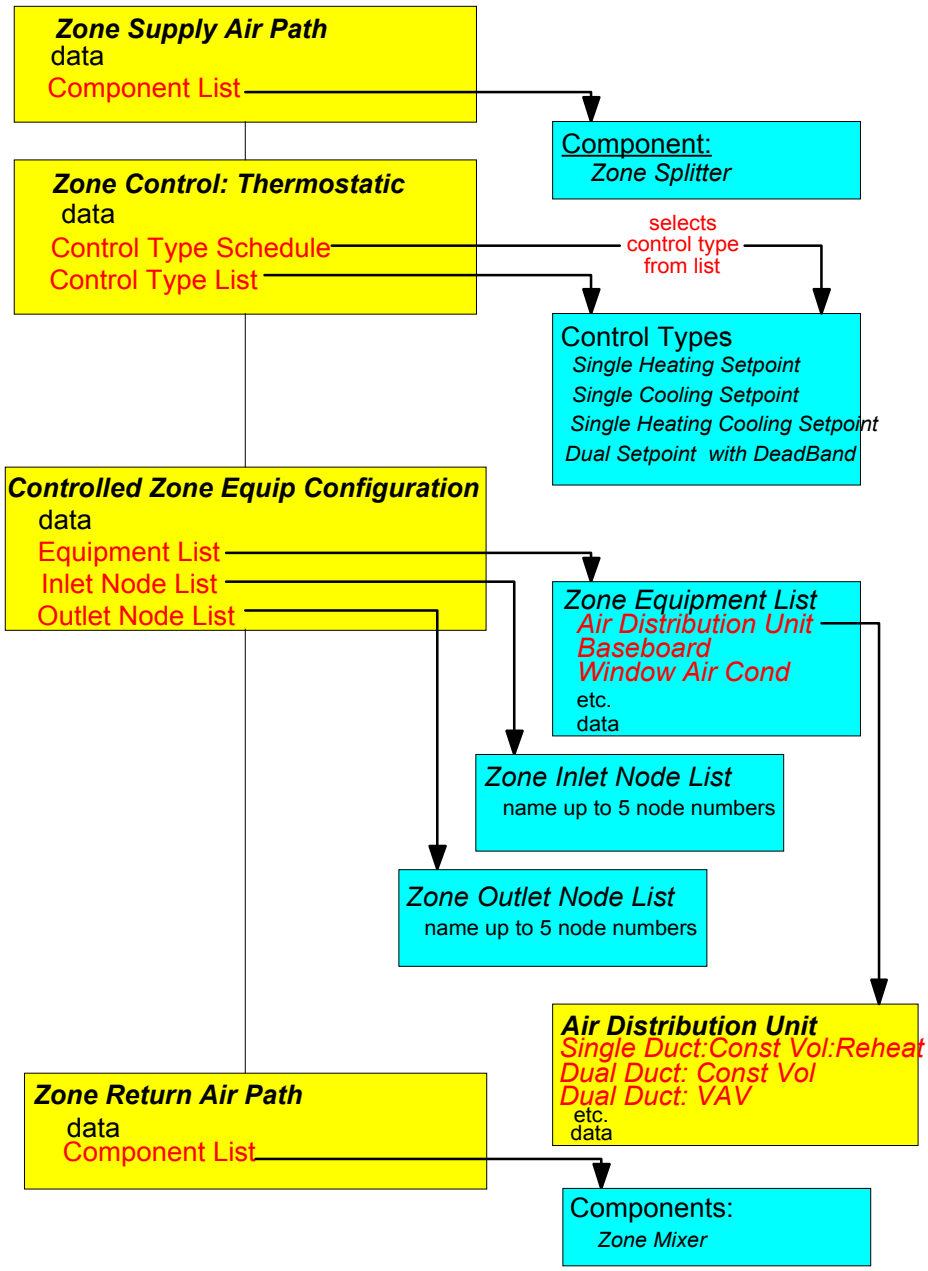

Figure 50. Zone Equipment Input Syntax Map

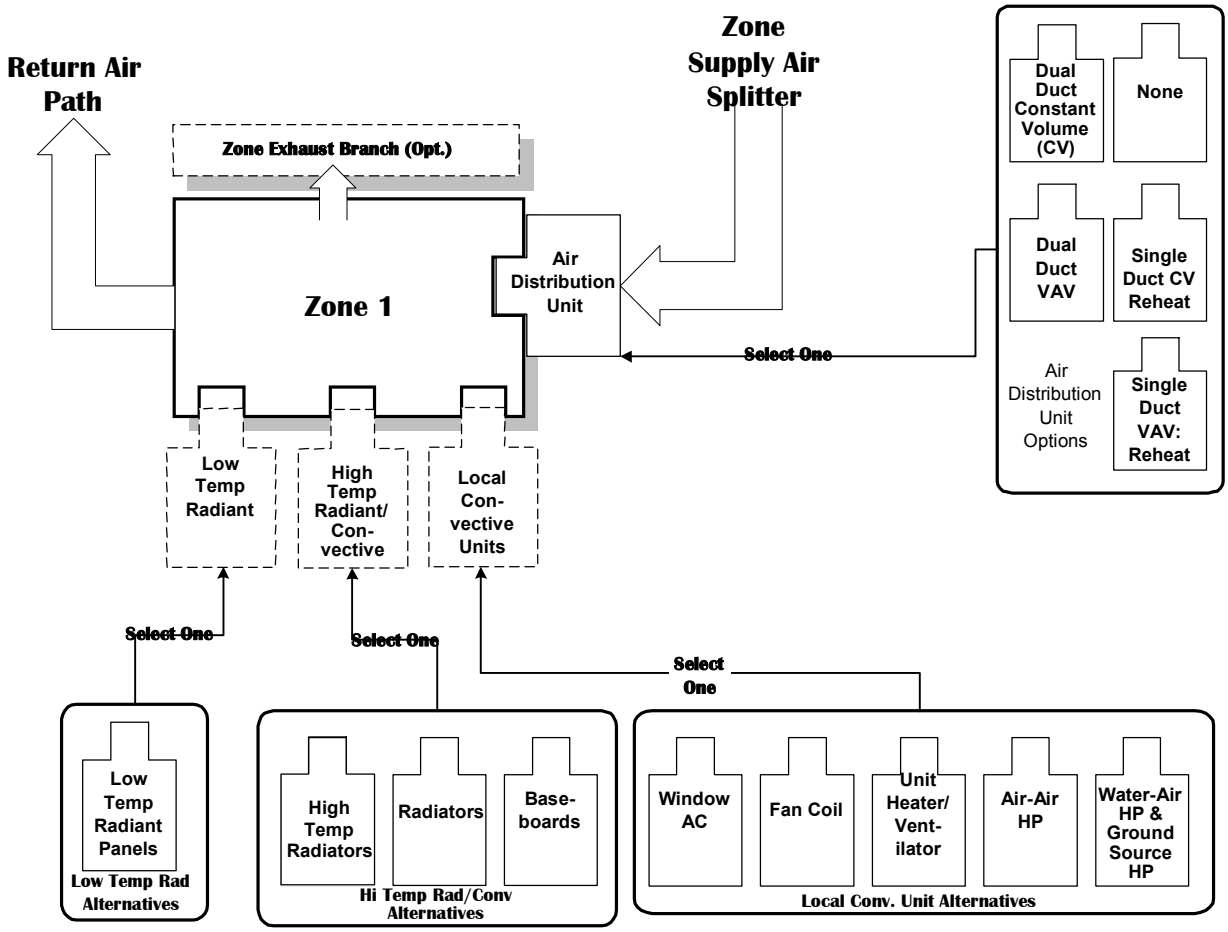

Figure 51. Zone Equipment

The following figure (Air Loop/Zone Equipment Node Diagram) illustrates the connection between the zone equipment and the air loop systems.

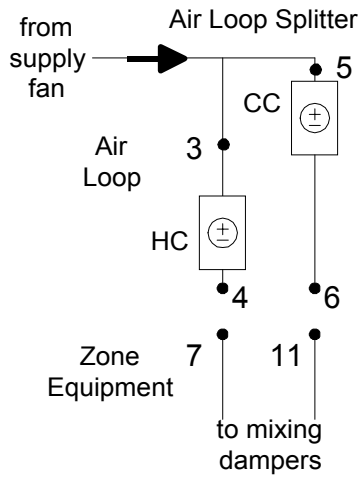

Figure 52. Air Loop/Zone Equipment Node Diagram

Each zone served by an HVAC system must have three additional statements to complete the zone equipment specification. An AIR DISTRIBUTION UNIT allows equipment typically

found within the zone inlet ductwork (such as dampers, reheat coils, etc.) to be attached to the supply air stream for a particular zone. A ZONE CONTROL statement will allow the conditions in the zone to be managed. Finally, a CONTROLLED ZONE EQUIP CONFIGURATION statement describes all of the pertinent information about the zone from an HVAC perspective. Each of these statements is described in more detail below.

Air Distribution Unit

The AIR DISTRIBUTION UNIT statement gives further information on what air loop equipment will be serving a particular zone. The Air Distribution Unit is the part of the system that is supplied from a common main air handler simulated in the Air Loop Simulation and includes the equipment that controls or tempers the air going to each individual zone according to the desired thermostatic control. The current options for Air Distribution Units are:

```
DUAL DUCT:CONST VOLUME
DUAL DUCT:VAV
SINGLE DUCT:CONST VOLUME:REHEAT
SINGLE DUCT:VAV:REHEAT
SINGLE DUCT:SERIES PIU:REHEAT
SINGLE DUCT:PARALLEL PIU:REHEAT
```

Connections between the air distribution unit, the supply air duct, and the zone are specified in the input syntax for the air distribution unit and the zone splitter. The input syntax also explicitly defines an outlet identifier. This implies a connection to a zone through a NODE LIST for zone inlets (see the CONTROLLED ZONE EQUIP CONFIGURATION statement). The air distribution unit is limited to one combined component-controller unit; because controls are normally based on the zone thermostat and can work in parallel or series in complex fashion. Since the control and the flow resolution can be complex, each air distribution unit is unique in addressing these combinations and therefore only one is allowed per zone.

Field: Air Distribution Unit Name

Unique identifying name of the air distribution unit.

Field: Air_Dist_Unit_Outlet_Node_Name

Outlet node name for the air distribution unit to the attached zone.

Field: KEY--System Component Type 1

Single combined component/controller unit for that attached zone. Selection of components as listed above.

Field: Component Name 1

The unique identifying component name.

```
! AIR DISTRIBUTION UNIT,
  A1 , \field Air Distribution Unit Name
  A2 , \field Air Dist Unit Outlet Node Name
! A typical set of components for an air distribution unit will
! consist of a single component Air Distribution Unit (ADU)
  A3 , \field KEY--System Component Type 1
  A4 ; \field Component Name 1
```

An example of this statement in an IDF is:

```
AIR DISTRIBUTION UNIT,
        Zone1TermReheat,
        Zone 1 Reheat Air Outlet Node,
        SINGLE DUCT:VAV:REHEAT,
        Zone 1 VAV System;
```

Controlled Zone Equip Configuration

Finally, the CONTROLLED ZONE EQUIP CONFIGURATION statement defines the remaining details about each thermal zone from an HVAC perspective (besides the controls which were defined above). As with other statements, the first two items in this object are the keyword and an identifying name which links the zone back to its geometrical input, internal gains, etc. and other statements in the HVAC section of the input. The next three items are names of lists (equipment, air inlet nodes, and air exhaust nodes) that are described in more detail below. Note that if there are no air exhaust nodes from the zone that field is left blank. And if there are no air inlet nodes, that field is left blank. Finally, two node names are necessary to complete the zone-HVAC description. The first node is the main air node for the zone upon which the air heat balance is performed. The other node begins the return air path from the zone.

Note that all nodes mentioned in the CONTROLLED ZONE EQUIP CONFIGURATION input must be unique. That is, all nodes in all the Controlled Zone Equip Configuration statements referenced by the "Zone Air Inlet Nodes", "Zone Air Exhaust Nodes", "Zone Air Node Name" and "Zone Return Air Node Name" cannot have any node name appearing more than once.

Field: Zone Name

Name links this equipment list back to the heat balance for the zone.

Field: List Name: Zone Equipment

List of zone equipment for this zone. This list will consist of air distribution units or other direct convection or radiant equipment, i.e. window air conditioner, baseboard, fan coils, etc.

Field: List Name: Zone Air Inlet Nodes

There can be more than one air inlet node depending on how many pieces of equipment are in the Zone Equipment List. Generally there will be one air inlet node for each piece of zone equipment that delivers conditioned air to the zone. Components such as electric or hot water baseboards and radiant systems do not require zone air inlet nodes. If this field is not required (as in the baseboard system), it should be blank.

Field: List Name: Zone Air Exhaust Nodes

List of exhaust nodes leaving the zone for exhaust fans, zone energy recovery, etc. However these nodes are also used as sources of zone air for zone components such as fan coil units, unit heaters and ventilators, and window air conditioners. For each such component attached to a zone there should be a unique zone exhaust node acting as the inlet node to the component. If there are no air exhaust nodes, this field should be blank.

Field: Zone Air Node Name

Currently the zone assumes a well-stirred model and therefore one zone node describes the air node in the zone. This field is required for all Controlled Zone Equip Configuration statements.

Field: Zone Return Air Node Name

The name of the return air node which attaches the zone to the return air path described above. If there is no return air in the system, this field should be blank.

```
CONTROLLED ZONE EQUIP CONFIGURATION,
  A1 , \field Zone Name
       \required-field
       \type object-list
       \object-list ZoneNames
  A2 , \field List Name: Zone Equipment
       \required-field
  A3 , \field List Name: Zone Air Inlet Nodes
  A4 , \field List Name: Zone Air Exhaust Nodes
  A5 , \field Zone Air Node Name
       \required-field
  A6 ; \field Zone Return Air Node Name
```

An example of this statement in an IDF is:

```
CONTROLLED ZONE EQUIP CONFIGURATION,
    SPACE3-1,              !- Zone Name
    SPACE3-1 Eq,           !- List Name: Zone Equipment
    SPACE3-1 In Nodes,     !- List Name: Zone Air Inlet Nodes
    ,                      !- List Name: Zone Air Exhaust Nodes
    SPACE3-1 Node,         !- Zone Air Node Name
    SPACE3-1 Out Node;     !- Zone Return Air Node Name
```

Zone Equipment List

The first list encountered in the CONTROLLED ZONE EQUIP CONFIGURATION statement is the ZONE EQUIPMENT LIST. As with most lists in the EnergyPlus input scheme, there is the defining keyword and an identifying name. In the case of the zone equipment list, each item in the list has four fields associated with it. The first two are the typical type keyword and identifying name pair. The remaining two items help define the cooling and heating priority of that piece of equipment, respectively. The priorities should be integers with a “1” being the highest priority, a “2” being the next highest priority, etc. Since there are separate inputs for heating and cooling, equipment can be prioritized appropriately for the different conditioning seasons. Note that an AIR DISTRIBUTION UNIT must be listed in this statement if there is a forced air system serving the zone from the air loop.

Field: Name

Unique identifying name.

Field Set (Key, Type Name, Cooling Priority, Heating Priority) up to 15

This set is used together in order to prioritize the equipment for heating and cooling. The #1 priority equipment will try to meet the entire demand with its capacity and then pass the results on to the #2 and so on for both heating and cooling.

Field: KEY--Zone Equipment Type 1

Unique name of the zone equipment.

Field: Type Name 1

Type of zone equipment such as air distribution unit, baseboard, window air conditioner, etc.

Field: Cooling Priority

Sets the first, second, third, etc. cooling priority for the piece of equipment described.

Field: Heating Priority

Sets the first, second, third, etc. heating priority for the piece of equipment described.

```
ZONE EQUIPMENT LIST,
  A1 , \field Name
   !List equipment in simulation order]
  A2 , \field KEY--Zone Equipment Type 1
  A3 , \field Type Name 1
  N1 , \field Cooling Priority
  N2 , \field Heating Priority
  A4 , \field KEY--Zone Equipment Type 2
  A5 , \field Type Name 2
  N3 , \field Cooling Priority
  N4 , \field Heating Priority
  A6 , \field KEY--Zone Equipment Type 3
  A7 , \field Type Name 3
  N5 , \field Cooling Priority
  N6 , \field Heating Priority
  A8 , \field KEY--Zone Equipment Type 4
  A9 , \field Type Name 4
  N7 , \field Cooling Priority
  N8 , \field Heating Priority
  A10, \field KEY--Zone Equipment Type 5
  A11, \field Type Name 5
  N9 , \field Cooling Priority
  N10, \field Heating Priority
  A12, \field KEY--Zone Equipment Type 6
  A13, \field Type Name 6
  N11, \field Cooling Priority
  N12, \field Heating Priority
  A14, \field KEY--Zone Equipment Type 7
  A15, \field Type Name 7
  N13, \field Cooling Priority
  N14, \field Heating Priority
 -- reduced for brevity - 15 allowed
```

An example of this statement in an IDF is:

```
ZONE EQUIPMENT LIST, Zone1Equipment,
        AIR DISTRIBUTION UNIT, Zone1DualDuct, 1, 1;
```

The Zone Inlets and Zone Exhaust are specified in a normal NODE LIST statement, named such that the CONTROLLED ZONE EQUIP CONFIGURATION can find them.

For example, in the IDF:

```
NODE LIST,
       Zone1Inlets,
       Zone 1 Reheat Air Outlet Node;

    NODE LIST,
       Zone2Inlets,
Zone 2 Reheat Air Outlet Node;

    NODE LIST,
       Zone3Inlets,
       Zone 3 Reheat Air Outlet Node;
```

Group – Zone Controls and Thermostats

Zone Control:Humidistat

The Zone Control is a way for the zone to be controlled to a specified relative humidity. The schedule will consist of relative humidities in precent to be used during that hour for that zone moisture prediction calculation. Only one control statement can be specified for each zone. Individual relative humidities can be defined hourly, thus giving the user a full range of flexibility. If the control relative humidity is below the calculated load and the equipment

specified can humidify then that equipment will try and meet the requirement. The opposite is true if the calculated value is above the setpoint and the equipment can dehumidify.

Field: Humidistat Name

Unique identifying name for the humidistat.

Field: Zone Name

Name of the zone that is being controlled.

Field: Relative Humidity SCHEDULE Name

Schedule that defines the relative humidity in percent for each hour of the simulation.

```
ZONE CONTROL:HUMIDISTAT,
  A1 , \field Humidistat Name
  A2 , \field Zone Name
       \type object-list
       \object-list ZoneNames
  A3 ; \field Relative Humidity SCHEDULE Name
       \note hourly schedule values should be in Relative Humidity (percent)
       \type object-list
       \object-list ScheduleNames
```

An example of this statement in an IDF is:

```
ZONE CONTROL:HUMIDISTAT, Zone 1 Humidistat, RESISTIVE ZONE,
    Seasonal Relative Humidity Sch;
```

An example schedule for the Zone Control:Humidistat

```
    DAYSCHEDULE, Summer Relative Humidity Sch, Humidity,
50.0,50.0,50.0,50.0,50.0,50.0,50.0,50.0,50.0,50.0,50.0,50.0,50.0,50.0,50.0,50.0,50.0,50.0,50.0,50.0,50.0,5
0.0,50.0,50.0;
    DAYSCHEDULE, Winter Relative Humidity Sch, Humidity,
30.0,30.0,30.0,30.0,30.0,30.0,30.0,30.0,30.0,30.0,30.0,30.0,30.0,30.0,30.0,30.0,30.0,30.0,30.0,30.0,30.0,3
0.0,30.0,30.0;
    WEEKSCHEDULE, Summer Relative Humidity Week Sch,
        Summer Relative Humidity Sch,Summer Relative Humidity Sch,Summer Relative Humidity Sch,
        Summer Relative Humidity Sch,Summer Relative Humidity Sch,Summer Relative Humidity Sch,
        Summer Relative Humidity Sch,Summer Relative Humidity Sch,Summer Relative Humidity Sch,
        Summer Relative Humidity Sch,Summer Relative Humidity Sch,Summer Relative Humidity Sch;
    WEEKSCHEDULE, Winter Relative Humidity Week Sch,
        Winter Relative Humidity Sch,Winter Relative Humidity Sch,Winter Relative Humidity Sch,
        Winter Relative Humidity Sch,Winter Relative Humidity Sch,Winter Relative Humidity Sch,
        Winter Relative Humidity Sch,Winter Relative Humidity Sch,Winter Relative Humidity Sch,
        Winter Relative Humidity Sch,Winter Relative Humidity Sch,Winter Relative Humidity Sch;
    SCHEDULE, Seasonal Relative Humidity Sch, Temperature,
        Winter Relative Humidity Week Sch, 1,1, 3,31,
        Summer Relative Humidity Week Sch, 4,1, 9,30,
        Winter Relative Humidity Week Sch, 10,1, 12,31;

ScheduleType,Humidity,0:100,CONTINUOUS;
```

Zone Control:Humidistat Outputs

Outputs available from the Zone Control:Humidistat:

```
HVAC,Average, Zone/Sys Moisture Load Rate Predicted[kgWater/sec]
```

Zone Control:Thermostatic

The Zone Control is a way for the zone to be controlled to a specified temperature. Zone Control:Thermostatic references a control type schedule and one or more control type objects which in turn reference one or more setpoint schedules. The example at the end of this section illustrates a complete zone thermostat specification including the control type and setpoint schedules.

The control type schedule and the list of control type/name pairs are directly related. The schedule defines the type of control that is to be used during for each hour. Valid Control Types are

0 - Uncontrolled (No specification or default)

1 - Single Heating Setpoint

2 - Single Cooling SetPoint

3 - Single Heating/Cooling Setpoint

4 - Dual Setpoint (Heating and Cooling) with deadband

Thus, if the schedule referenced in the ZONE CONTROL statement has a value of 4 for a particular hour, this indicates that during that hour "dual setpoint with deadband control" is to be used. The specific "dual setpoint with deadband" control object to be used is specified in the list of control type/name pairs. Then the specific control type objects reference the thermostat setpoint temperature schedule to be used. Because only one control can be specified for each control type in a ZONE CONTROL statement, there are only four pairs possible in a particular ZONE CONTROL type/name list. This is because individual controls can be defined hourly, thus giving the user a full range of flexibility. Since putting in the name of the control type directly in the schedule would be very cumbersome, the control types are assigned a number which is used in the hourly schedule profile.

Field: Thermostat Name

Unique identifying name for the thermostat.

Field: Zone Name

Name of the zone that is being controlled.

Field: Control Type SCHEDULE Name

Schedule which defines what type of control is active during each hour of the simulation. Valid Control Types are

0 - Uncontrolled (No specification or default)

1 - Single Heating Setpoint

2 - Single Cooling SetPoint

3 - Single Heating Cooling Setpoint

4 - Dual Setpoint with Deadband (Heating and Cooling)

Each non-zero control type which is used in this schedule must appear in the following fields which list the specific thermostat control objects to be used for this zone.

Field Set (Control Type, Control Type Name)

There are four available thermostat control types:

Single Heating Setpoint

Single Cooling SetPoint

Single Heating Cooling Setpoint

Dual Setpoint with Deadband

Up to four paris of Control Type and Control Type Name may be listed to specify which control objects are used for this zone. This list is not order-dependent, and the position in

this list has no impact on the control type schedule. In the control type schedule, a value of 1 always means "Single Heating Setpoint", even if that control type is not first in this list.

Field: Control Type #1

This field specifies the first control type to be used for this zone. Available control types are:

Field: Control Type Name #1

The corresponding unique control type name.

```
ZONE CONTROL:THERMOSTATIC,
  A1 , \field Thermostat Name
  A2 , \field Zone Name
       \type object-list
       \object-list ZoneNames
  A3 , \field Control Type SCHEDULE Name
       \type object-list
       \object-list ScheduleNames
  A4 , \field Control Type #1
       \type choice
       \key Single Heating Setpoint
       \key Single Cooling SetPoint
       \key Single HeatCool Setpoint
       \key Dual Setpoint with Deadband
  A5 , \field Control Type Name #1
       \type object-list
       \object-list ControlTypeNames
  A6 , \field Control Type #2
       \type choice
       \key Single Heating Setpoint
       \key Single Cooling SetPoint
       \key Single HeatCool Setpoint
       \key Dual Setpoint with Deadband
  A7 , \field Control Type Name #2
       \type object-list
       \object-list ControlTypeNames
  A8 , \field Control Type #3
       \type choice
       \key Single Heating Setpoint
       \key Single Cooling SetPoint
       \key Single HeatCool Setpoint
       \key Dual Setpoint with Deadband
  A9 , \field Control Type Name #3
       \type object-list
       \object-list ControlTypeNames
  A10, \field Control Type #4
       \type choice
       \key Single Heating Setpoint
       \key Single Cooling SetPoint
       \key Single HeatCool Setpoint
       \key Dual Setpoint with Deadband
  A11; \field Control Type Name #4
       \type object-list
       \object-list ControlTypeNames
```

An example of this statement in an IDF is:

```
ZONE CONTROL:THERMOSTATIC, Zone 3 Thermostat, NORTH ZONE,
        Zone Control Type Sched,
        DUAL SETPOINT WITH DEADBAND, VAV Setpoints;
```

The syntax for each of the four different ZONE CONTROL types is shown in the Zone Thermostats section. A complete zone thermostat example showing this statement and all of the objects it references is:

```
! Zone control object which links thermostats to a particular zone
    ZONE CONTROL:THERMOSTATIC, Zone 2 Thermostat, EAST ZONE,
        Zone Control Type Sched,
        SINGLE COOLING SETPOINT, Cooling Setpoint with SB,
        SINGLE HEATING SETPOINT, Heating Setpoint with SB;

! Control type objects - these may be used in more than one zone
    SINGLE COOLING SETPOINT,
        Cooling Setpoint with SB,
        Cooling Setpoints;

    SINGLE HEATING SETPOINT,
        Heating Setpoint with SB,
        Heating Setpoints;

! Schedule type definitions
    ScheduleType,Temperature,-60:200,CONTINUOUS;
    ScheduleType,Control Type,0:4,DISCRETE;

! Control type schedule definition
    DAYSCHEDULE, Summer Control Type Day Sch, Control Type,
        2,2,2,2,2,2,2,2,2,2,2,2,2,2,2,2,2,2,2,2,2,2,2,2;
    DAYSCHEDULE, Winter Control Type Day Sch, Control Type,
        1,1,1,1,1,1,1,1,1,1,1,1,1,1,1,1,1,1,1,1,1,1,1,1;
    WEEKSCHEDULE, Summer Control Type Week Sch,
        Summer Control Type Day Sch,Summer Control Type Day Sch,Summer Control Type Day Sch,
        Summer Control Type Day Sch,Summer Control Type Day Sch,Summer Control Type Day Sch,
        Summer Control Type Day Sch,Summer Control Type Day Sch,Summer Control Type Day Sch,
        Summer Control Type Day Sch,Summer Control Type Day Sch,Summer Control Type Day Sch;
    WEEKSCHEDULE, Winter Control Type Week Sch,
        Winter Control Type Day Sch,Winter Control Type Day Sch,Winter Control Type Day Sch,
        Winter Control Type Day Sch,Winter Control Type Day Sch,Winter Control Type Day Sch,
        Winter Control Type Day Sch,Winter Control Type Day Sch,Winter Control Type Day Sch,
        Winter Control Type Day Sch,Winter Control Type Day Sch,Winter Control Type Day Sch;
    SCHEDULE, Zone Control Type Sched, Control Type,
        Winter Control Type Week Sch, 1,1, 3,31,
        Summer Control Type Week Sch, 4,1, 9,30,
        Winter Control Type Week Sch, 10,1, 12,31;

! Cooling setpoint schedule definition
    DAYSCHEDULE, Heating Setpoint Day Sch, Temperature,
        15.,15.,15.,15.,15.,15.,15.,20.,20.,20.,20.,20.,
        20.,20.,20.,20.,20.,15.,15.,15.,15.,15.,15.,15.;
    WEEKSCHEDULE, Heating Setpoint Week Sch,
        Heating Setpoint Day Sch,Heating Setpoint Day Sch,Heating Setpoint Day Sch,
        Heating Setpoint Day Sch,Heating Setpoint Day Sch,Heating Setpoint Day Sch,
        Heating Setpoint Day Sch,Heating Setpoint Day Sch,Heating Setpoint Day Sch,
        Heating Setpoint Day Sch,Heating Setpoint Day Sch,Heating Setpoint Day Sch;
    SCHEDULE, Heating Setpoints, Temperature,
        Heating Setpoint Week Sch, 1,1, 12,31;

! Heating setpoint schedule definition
    DAYSCHEDULE, Cooling Setpoint Day Sch, Temperature,
        30.,30.,30.,30.,30.,30.,30.,23.,23.,23.,23.,23.,
        23.,23.,23.,23.,23.,23.,23.,23.,30.,30.,30.,30.;
    WEEKSCHEDULE, Cooling Setpoint Week Sch,
        Cooling Setpoint Day Sch,Cooling Setpoint Day Sch,Cooling Setpoint Day Sch,
        Cooling Setpoint Day Sch,Cooling Setpoint Day Sch,Cooling Setpoint Day Sch,
        Cooling Setpoint Day Sch,Cooling Setpoint Day Sch,Cooling Setpoint Day Sch,
        Cooling Setpoint Day Sch,Cooling Setpoint Day Sch,Cooling Setpoint Day Sch;
    SCHEDULE, Cooling Setpoints, Temperature,
        Cooling Setpoint Week Sch, 1,1, 12,31;
```

Zone Thermostats

The syntax for the current set of four zone thermostats is given below. In each case, the keyword is accompanied by an identifying name and either one or two schedule names (depending on whether the control is a single or dual setpoint control). The schedule defines

a temperature setpoint for the control type. The schedule would be defined through the standard schedule syntax described earlier in this document. For an uncontrolled zone no thermostat is specified or necessary.

Single Heating Setpoint

This would be for a heating only thermostat. The setpoint can be scheduled and varied throughout the simulation but only heating is allowed with this control type.

Field: Name

Unique name for this control type.

Field: Setpoint Temperature SCHEDULE Name

The name of the associated schedule.

Single Cooling Setpoint

This would be for a cooling only thermostat. The setpoint can be scheduled and varied throughout the simulation but only cooling is allowed.

Field: Name

Unique name for this control type.

Field: Setpoint Temperature SCHEDULE Name

The name of the associated schedule.

Single Heating Cooling Setpoint

This would be for heating and cooling thermostat but only heating or cooling can be scheduled at any given time period. The setpoint can be scheduled and varied throughout the simulation for both heating and cooling.

Field: Name

Unique name for this control type.

Field: Setpoint Temperature SCHEDULE Name

The name of the associated schedule.

Dual Setpoint with Deadband

This would be for heating and cooling thermostat where both a heating and cooling setpoint can be scheduled for any given time period. The setpoint can be scheduled and varied throughout the simulation for both heating and cooling.

Field: Name

Unique name for this control type.

Field: Setpoint Temperature SCHEDULE Name

The name of the associated schedule.

Field: Heating Setpoint Temperature SCHEDULE Name

The heating temperature schedule.

Field: Cooling Setpoint Temperature SCHEDULE Name

The cooling temperature schedule.

```
SINGLE HEATING SETPOINT,
  A1 , \field Name
  A2 ; \field Setpoint Temperature SCHEDULE Name

SINGLE COOLING SETPOINT,
  A1 , \field Name
  A2 ; \field Setpoint Temperature SCHEDULE Name

SINGLE HEATING COOLING SETPOINT,
  A1 , \field Name
  A2 ; \field Setpoint Temperature SCHEDULE Name

DUAL SETPOINT WITH DEADBAND,
  A1 , \field Name
  A2 , \field Heating Setpoint Temperature SCHEDULE Name
  A3 ; \field Cooling Setpoint Temperature SCHEDULE Name
```

Examples of these statements in an IDF are:

```
SINGLE HEATING SETPOINT, Heating Setpoint with SB, Heating Setpoints;
SINGLE COOLING SETPOINT, Cooling Setpoint with SB, Cooling Setpoints;
SINGLE HEATING COOLING SETPOINT, Heating Cooling Setpoint Sched, Heating Cooling Setpoints;
DUAL SETPOINT WITH DEADBAND, VAV Setpoints, Heating Setpoints, Cooling Setpoints;
```

Group – Air Path

Zone Supply Air Path, Zone Return Air Path

The zone supply and zone return air paths are used to split and then combine the supply air from the main air handler linked to a common air loop to serve each individual zone. The zone supply air path consists of a zone splitter that is used to branch the main supply air stream(s) off to the different zones. Conversely, the zone-return air path consists of a mixer that is used to accumulate the return air stream(s) coming back from the different zones. The individual zones will connect through these two statements with the implied link to the splitter outlets and the mixer inlets. For dual duct systems, there will be splitters for both the cold and hot air ducts on the supply side and plenums and one mixer on the return air side per air loop. The zone supply plenum allows system air to be distributed through a zone before it reaches the zones to be served. The zone supply plenum still needs a zone splitter to connect to the individual zones. The return plenum allows system air to be mixed from the zone/s as well as the typical ducted zone air returns. The zone return plenum still needs a mixer if there is more than one being connected back to the air loop simulation. Below are the descriptions of the zone supply and return path statements. Note that each statement type has an identifying name, a single inlet/outlet node number, and a list of component type/name pairs. You can have only one mixer or splitter that is part of the zone air path per air loop. For more information on the plenum, reference the Zone Supply Plenum and Zone Return Plenum objects.

Zone Supply Air Path

Zone Splitter or Zone Supply Plenum components to split the air from the air loop simulation from each duct to each individual zone being served.

Field: Supply Air Path Name

Unique name to identify the supply air path, i.e. Main Hot Air Inlet.

Field: Supply Air Path Inlet Node

The node on the Zone Equipment side attached to the inlet of the zone splitter or zone supply plenum.

Field: KEY--System Component Type 1

Component list for the supply air path. Only zone splitters and zone supply plenums are allowed. The last component must be the zone splitter.

Field: Component Name 1

Unique Zone Splitter or Zone Supply Plenum names in the supply air path.

Zone Return Air Path

Zone Mixer or Zone Return Plenum components that make up the return air path from each individual zone back to the main air loop simulation.

Field: Return Air Path Name

Unique name to identify the return air path.

Field: Return Air Path Outlet Node

The node that is the outlet to the air loop simulation from the mixer.

Field: KEY--System Component Type 1

Component list for the return air path. Only zone mixers and zone return plenums are allowed.

Field: Component Name 1

Unique Zone Mixer or Zone Return Plenum names in the return air path.

```
ZONE SUPPLY AIR PATH,
  A1 , \field Supply Air Path Name
  A2 , \field Supply Air Path Inlet Node
! A supply air path can only consist of one splitter
  A3 , \field KEY--System Component Type 1
  A4 , \field Component Name 1
```

```
ZONE RETURN AIR PATH,
  A1 , \field Return Air Path Name
  A2 , \field Return Air Path Outlet Node
! A return air path can only consist of mixers and plenums
  A3 , \field KEY--System Component Type 1
  A4 , \field Component Name 1
```

An example of this statement in an IDF is:

```
ZONE SUPPLY AIR PATH, HotAirSupplyPath, Main Hot Air Inlet, Zone Splitter, ZoneHotAirSupplySplitter;
ZONE SUPPLY AIR PATH, ColdAirSupplyPath, Main Cold Air Inlet, Zone Splitter, ZoneColdAirSupplySplitter;
ZONE RETURN AIR PATH, DualDuctReturnPath, Return Air Mixer Outlet, Zone Mixer, ZoneReturnAirMixer;
```

Zone Return Plenum

The simple building shown in the figure below, consists of a controlled zone, and a return plenum zone which is used for the return air. This simple configuration contains a ground floor controlled zone with a window and a return plenum zone which handles the roof load. The return air plenum is unique since there is a heat balance connection and building description, and a system airflow connection which transfers the airflow directly from the controlled zone to the return plenum zone through the system air simulation. The input described in this section is mainly just for the system airflow connections in the HVAC algorithms. In addition the return plenum zone must be fully input in the building zone description. The return plenum zone description needs to contain the wall descriptions, the interzone ceiling and floor, and for this simple case the roof. All the other attributes of a zone that can be specified in the building description can be utilized with a return plenum zone if necessary, i.e. scheduled loads, windows, etc.

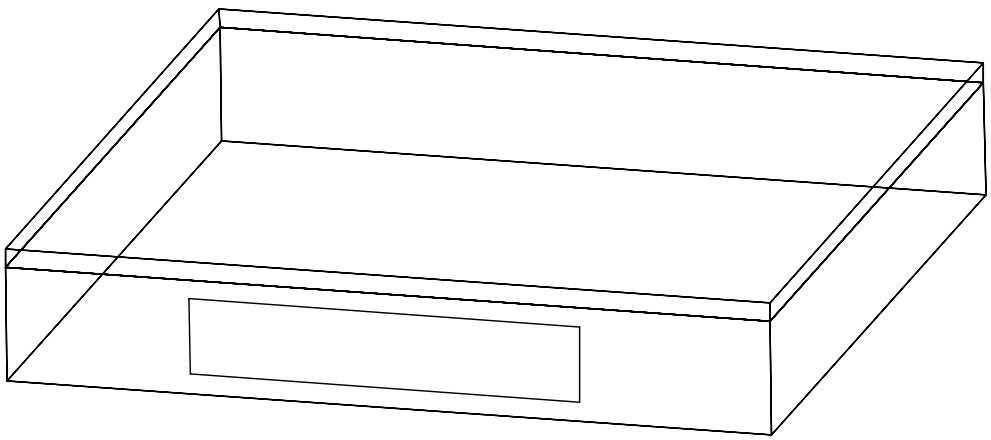

Figure 53. Illustration of Zone Return Plenum

After all the building zone attributes are specified, then the zone return plenum is specified to connect the zone to the system simulation. To complete the return air path from the controlled zone to the air loop, the zone return plenum component is added and all of the zone return plenums are attached to the mixer. The Zone Return Air Path needs to include the Zone Return Plenum as a component. Refer to the Zone Return Air Path for an explanation of that syntax.

Field: Zone Return Plenum Name

A unique identifying name identifying the zone return plenum system component.

Field: Zone Name

The zone name specified in the heat balance portion of the input. This piece of input connects the zone return plenum system component to the heat balance data structure.

Field: Zone Node Name

The name of the zone node. The zone node name connects the heat balance data structure to the system airflow data structure through this node.

Field: Outlet_Node

The name of the zone outlet node. For the zone return plenum there is only one outlet node that can be specified.

Field: Inlet_Node

The name of the zone inlet node. The zone return plenum component can collect air from many other zones, therefore there are multiple zone inlet node specifications that can be made. Currently this value is 30 per air loop but this can easily be extended by adding more inlet nodes in the Energy+.idd.

```
ZONE RETURN PLENUM,
       \memo Connects N Zone Inlet Air Streams, through Zone Return Plenum, to Outlet (currently 30 per
air loop)
   A1, \field Zone Plenum Name
   A2, \field Zone Name
   A3, \field Zone Node Name
   A4, \field Outlet_Node
   A5, \field Inlet_Node_1
   A6, \field Inlet_Node_2
   A7, \field Inlet_Node_3
            .
            .
            .
   A34; \field Inlet_Node_30
```

And, an IDF example of a zone return plenum component specification:

```
ZONE RETURN PLENUM,
            Zone 1a Plenum, ! Zone Plenum Name
            ZONE 1a, ! Zone Name
            Zone 1a Node, ! Zone Node Name
            Zone 1a Plenum Outlet Node, ! Outlet_Node
            Zone 1 Outlet Node; ! Inlet_Node_1
```

Below is an example of the Zone Return Air Path for this simple zone shown above.

```
ZONE RETURN AIR PATH,
            TermReheatReturnPath,
            Return Air Mixer Outlet,
            Zone Return Plenum, Zone 1a Plenum,
            Zone Mixer, Zone Return Air Mixer;
```

Zone Supply Plenum

The building shown in the figure below consists of three controlled zones served by a zone supply plenum beneath the floor.

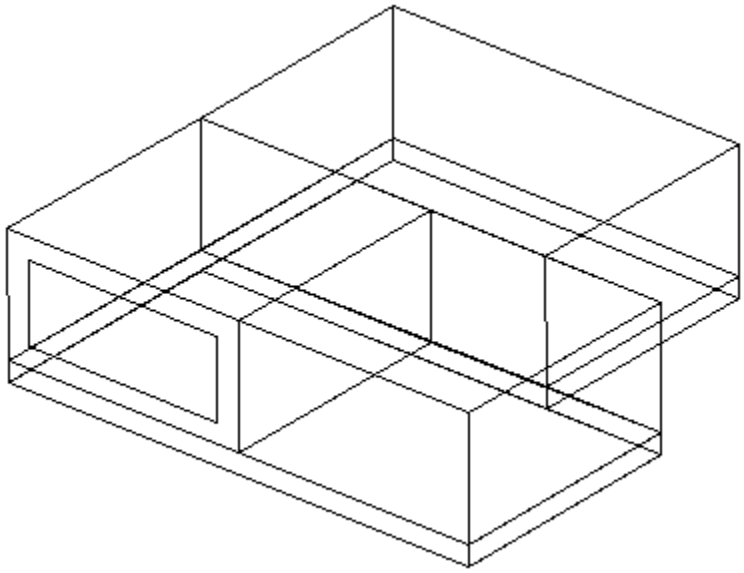

Figure 54. Illustration of Zone Supply Plenum

The zone supply plenum has a heat balance connection and building description, and a system airflow connection which transfers the airflow directly from the supply plenum zone to the controlled zones through the system air simulation. The input described in this section is mainly just for the system airflow connections in the HVAC algorithms. In addition the supply plenum zone must be fully input in the building zone description. The supply plenum zone description needs to contain the wall descriptions, the interzone ceiling and floor, and the ground connection. All the other attributes of a zone that can be specified in the building description can be utilized with a supply plenum zone if necessary, i.e. scheduled loads, windows, etc.

After all the building zone attributes are specified, then the zone supply plenum is specified to connect the zone to the system simulation. The zone supply plenum component is inserted in the supply air path before the zone splitter. Zone supply plenums are only allowed in a single duct system. Only one zone supply plenum is allowed per air loop. The zone splitter must always be the last component in the supply air path. Refer to the Zone Supply Air Path for an explanation of that syntax.

Field: Zone Supply Plenum Name

A unique identifying name identifying the zone supply plenum system component.

Field: Zone Name

The zone name specified in the heat balance portion of the input. This piece of input connects the zone supply plenum system component to the heat balance data structure.

Field: Zone Node Name

The name of the zone node. The zone node name connects the heat balance data structure to the system airflow data structure through this node.

Field: Inlet _Node

The name of the zone inlet node. For the zone supply plenum there is only one inlet node that can be specified.

Field: Outlet_Node

The name of the zone outlet node. The zone supply plenum component can only connect to a zone splitter. Therefore, only one outlet node can be specified.

```
ZONE SUPPLY PLENUM,
       \memo Connects 1 Zone Inlet Air Stream, through Zone Supply Plenum, to 1 Outlet
   A1, \field Zone Plenum Name
   A2, \field Zone Name
   A3, \field Zone Node Name
   A4, \field Inlet_Node
   A5; \field Outlet_Node
```

And, an IDF example of a zone supply plenum component specification:

```
ZONE SUPPLY PLENUM,
    Supply Plenum 1, ! Zone Return Plenum Name
    SUPPLY PLENUM ZONE, ! Zone Name
    Supply Plenum 1 Zone Node, ! Zone Node Name
    Zone Equipment Inlet Node, ! Inlet_Node
    Supply Plenum 1 Outlet Node; ! Outlet_Node
```

Below is an example of the Zone Supply Air Path for the building shown above.

```
ZONE SUPPLY AIR PATH,
    TermReheatSupplyPath,
    Zone Equipment Inlet Node,
    Zone Supply Plenum, Supply Plenum 1,
    Zone Splitter, Zone Supply Air Splitter;
```

Zone Mixer, Zone Splitter

ZONE MIXERs and ZONE SPLITTERs are only allowed in the supply air path and the return air path. There is only one ZONE SPLITTER allowed per SUPPLY AIR PATH and this splitter only contains node connection information. The zone splitter does a very important job in the supply air path. It passes the required flow information back to the supply air inlet so that the air loop simulation knows how much flow is required per branch. When the flow information is known per leg of the splitter the property information can be allocated accordingly. The mixer does a very simple job of recombining properties and the flows from each zone and aggregates them for return to the air loop.

Zone Splitter

Component that splits flow from the air loop simulation to each zone. The control of the flow is normally determined downstream of the splitter, therefore the splitter component has a very important job in the simulation to pass mass flow information upstream to the air loop simulation and fluid property information downstream

Field: Splitter Name

Unique Zone Splitter name.

Field: Inlet_Node

There is one unique inlet node per splitter from the air loop simulation and this node is specified in the input.

Field: Outlet_Node_Number_1 (up to 50 allowed)

These are all of the outlet node names from the splitter leading to each zone.

```
ZONE SPLITTER,
 ! [Split One Air Stream Into N outlet streams(currently 50 per air loop)]
   A1    [Splitter Name],
   A2, \field Inlet_Node
   A3, \field Outlet_Node_Number_1
   A4, \field Outlet_Node_Number_2
   A5, \field Outlet_Node_Number_3
   A6, \field Outlet_Node_Number_4
   A7, \field Outlet_Node_Number_5
   A8, \field Outlet_Node_Number_6
           .
           .
           .
```

Zone Mixer

The Zone Mixer takes the air from the zone and mixes the streams together to be returned to the air loop simulation. This is a simple process of summing flows and averaging the air properties.

Field: Mixer Name

Unique Zone Mixer name.

Field: Outlet_Node

The name of the outlet node leading to the air loop simulation.

Field: Inlet_Node_Number_1 (up to 50 allowed)

All of the node names that are coming from each zone on the return air side.

```
ZONE MIXER,
 ! [Mix N Inlet Air Streams into One(currently 50 per air loop)]
   A1    [Mixer Name],
   A2, \field Outlet_Node
   A3, \field Inlet_Node_Number_1
   A4, \field Inlet_Node_Number_2
   A5, \field Inlet_Node_Number_3
   A6, \field Inlet_Node_Number_4
   A7, \field Inlet_Node_Number_5
           .
           .
           .
```

The sample syntax is shown below.

```
ZONE SPLITTER, Zone Supply Air Splitter,
         Zone Equipment Inlet Node,    ! inlet node
         Zone 1 Damper Inlet Node,     ! outlet Nodes
         Zone 2 Damper Inlet Node,
         Zone 3 Damper Inlet Node;
```

```
ZONE MIXER, Zone Return Air Mixer,
         Return Air Mixer Outlet Node, ! outlet Node
         Zone 1 Outlet Node,           ! inlet nodes
         Zone 2 Outlet Node,
         Zone 3 Outlet Node;
```

Group – Coils

Several different COILs may be added to zone equipment and air loops. This includes simple heating (gas, electric, and hot water) and a simple water-cooling coil as well as a more detailed flat fin water-cooling coil model. In general, the heating coil description can be used for a heating coil, a reheat coil, or a preheat coil in the air loop simulation or for zone

equipment. Figure 55 is an example of a heating and cooling coil in the air loop simulation in a dual duct system. This does show the basic node structure that will be referenced in the input description. The figure does show water coils since they are the most complex to input in the simulation compared to the Electric and Gas coils which only have air connections.

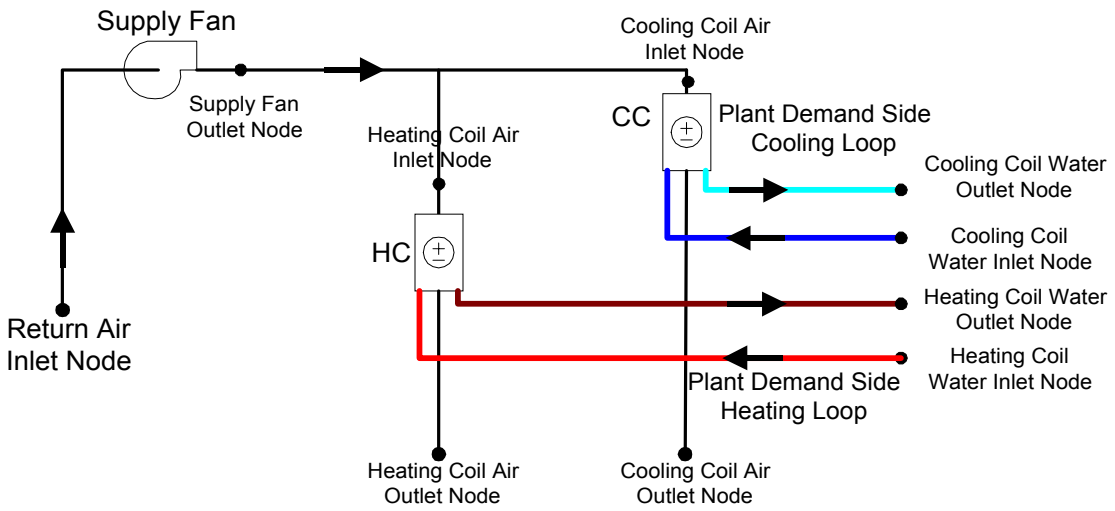

Figure 55. Example Air Loop Heating & Cooling Coil

Coil:Water:SimpleCooling

The simple water coil model is useful when not much detail about the physical makeup of the coil is known. When more detail about the coil can be obtained, the more detailed water coil model may be used. As can be seen below, the detailed flat fin cooling coil model requires significantly more input for the physical description of the model. The simple cooling coil uses the Effectiveness-NTU algorithm and assumes a cross-flow heat exchanger.

Field: Coil Name

A unique identifying name for each coil.

Field: Available Schedule

Schedule which defines when the coil is available.

Field: UA of the Coil

The UA value for the coil needed for the Effectiveness-NTU heat exchanger model. This field is autosizable.

Field: Max Water Flow Rate of Coil

The maximum possible water/refrigerant flow rate (m^3/sec) through the coil. This field is autosizable.

Field: Leaving Relative Humidity of Coil

This is the value of the Relative Humidity (decimal, not percent) that the air will leave the coil and defines the latent removal capability of the coil as a set value. This is used when you do

not have enough information to supply to a detailed coil model that more accurately simulates the latent heat removal.

Field: Coil_Water_Inlet_Node

The name of the water coil inlet from the chilled water loop, i.e. Cooling Coil Water Inlet Node.

Field: Coil_Water_Outlet_Node

The name of the water coil outlet from the chilled water loop, i.e. Cooling Coil Water Outlet Node.

Field: Coil_Air_Inlet_Node

The name of the air inlet to the water coil, i.e. Cooling Coil Air Inlet Node.

Field: Coil_Air_Outlet_Node

The name of the air outlet from the water coil, i.e. Cooling Coil Air Outlet Node.

```
COIL:Water:SimpleCooling,
  A1 , \field Coil Name
       \required-field
  A2 , \field Available Schedule
       \type object-list
       \object-list ScheduleNames
  N1 , \field UA of the Coil
       \units W/K
       \autosizable
  N2 , \field Max Water Flow Rate of Coil
       \units m3/s
       \autosizable
  N3 , \field Leaving Relative Humidity of Coil
       \maximum 1.0
       \minimum 0.0
       \default 0.9
  A3 , \field Coil_Water_Inlet_Node
  A4 , \field Coil_Water_Outlet_Node
  A5 , \field Coil_Air_Inlet_Node
  A6 ; \field Coil_Air_Outlet_Node
```

Simple Cooling Water Coil Outputs

```
HVAC,Sum, Total Water Cooling Coil Energy[J]
HVAC,Sum,Sensible Water Cooling Coil Energy[J]
HVAC,Average,Total Water Cooling Coil Rate[W]
HVAC,Average,Sensible Water Cooling Coil Rate[W]
```

Coil:Water:SimpleHeating

The simple heating coil model only does sensible heating of the air. The simple heating coil uses the Effectiveness-NTU algorithm and assumes a cross-flow heat exchanger.

Field: Coil Name

A unique identifying name for each coil.

Field: Available Schedule

Schedule that defines when the coil is available.

Field: UA of the Coil

The UA value for the coil needed for the Effectiveness-NTU heat exchanger model. This field is autosizable.

Field: Max Water Flow Rate of Coil

The maximum possible water flow rate (m^3/sec) through the coil. This field is autosizable.

Field: Coil_Water_Inlet_Node

The name of the water coil inlet from the chilled water loop, i.e. Heating Coil Water Inlet Node.

Field: Coil_Water_Outlet_Node

The name of the water coil outlet from the chilled water loop, i.e. Heating Coil Water Outlet Node.

Field: Coil_Air_Inlet_Node

The name of the air inlet to the water coil, i.e. Heating Coil Air Inlet Node.

Field: Coil_Air_Outlet_Node

The name of the air outlet from the water coil, i.e. Heating Coil Air Outlet Node.

```
COIL:Water:SimpleHeating,
  A1 , \field Coil Name
       \required-field
       \type alpha
       \reference HeatingCoilName
  A2 , \field Available Schedule
       \type object-list
       \object-list ScheduleNames
  N1 , \field UA of the Coil
       \units W/K
       \autosizable
  N2 , \field Max Water Flow Rate of Coil
       \units m3/s
       \autosizable
  A3 , \field Coil_Water_Inlet_Node
  A4 , \field Coil_Water_Outlet_Node
  A5 , \field Coil_Air_Inlet_Node
  A6 ; \field Coil_Air_Outlet_Node
```

Simple Heating Water Coil Outputs

```
HVAC,Sum, Total Water Heating Coil Energy[J]
HVAC,Average,Total Water Heating Coil Rate[W]
```

Coil:Electric:Heating

The Electric heating coil is a simple capacity model with a user-inputted efficiency. In many cases, this efficiency for the electric coil will be 100%. This coil will be simpler than shown in Figure 55 since it will only have air nodes to connect it in the system. The coil can be used in the air loop simulation or in the zone equipment as a reheat coil. Depending on where it is used determines if this coil is temperature or capacity controlled. If used in the air loop simulation it will be controlled to a specified temperature scheduled from the SetPoint Manager. If it is used in zone equipment, it will be controlled from the zone thermostat by meeting the zone demand.

Field: Coil Name

A unique identifying name for each coil.

Field: Available Schedule

Schedule that defines when the coil is available.

Field: Efficiency of the Coil

This is user-inputted efficiency (decimal units, not percent) and can account for any loss. In most cases for the electric coil, this will be 100%.

Field: Nominal Capacity of the Coil

This is the maximum capacity of the coil (W). This controlled coil will only provide the needed capacity to meet the control criteria whether it is temperature or capacity controlled. This field is autosizable.

Field: Coil_Air_Inlet_Node

The name of the air inlet to the water coil, i.e. Heating Coil Air Inlet Node.

Field: Coil_Air_Outlet_Node

The name of the air outlet from the water coil, i.e. Heating Coil Air Outlet Node.

Field: Coil_Temp_Setpoint_Node

If the coil is used in the air loop simulation and is temperature controlled by the Set Point Manager then the node that is the control node needs to be specified here.

```
COIL:Electric:Heating,
  A1 , \field Coil Name
       \type alpha
       \reference HeatingCoilName
  A2 , \field Available Schedule
       \type object-list
       \object-list ScheduleNames
  N1 , \field Efficiency of the Coil
       \maximum 1.0
       \minimum 0.0
       \default 1.0
  N2 , \field Nominal Capacity of the Coil
       \units W
       \autosizable
  A3 , \field Coil_Air_Inlet_Node
  A4 , \field Coil_Air_Outlet_Node
  A5 ; \field Coil_Temp_Setpoint_Node
       \note  optional if coil is temp and not load controlled
```

Electric Heating Coil Outputs

```
HVAC,Sum,Heating Coil Energy[J]
HVAC,Average,Heating Coil Rate[W]
HVAC,Sum,Heating Coil Electric Consumption [J]
HVAC,Average,Heating Coil Electric Power [W]
```

Coil:Gas:Heating

The Gas heating coil is a simple capacity model with a user inputted gas burner efficiency. The default for the gas burner efficiency is 80%. This coil will be simpler than shown in Figure 55 since it will only have air nodes to connect it in the system. The coil can be used in the air loop simulation or in the zone equipment as a reheat coil. Depending on where it is

used determines if this coil is temperature or capacity controlled. If used in the air loop simulation it will be controlled to a specified temperature scheduled from the SetPoint Manager. If it is used in zone equipment, it will be controlled from the zone thermostat by meeting the zone demand.

Field: Coil Name

A unique identifying name for each coil.

Field: Available Schedule

Schedule that defines when the coil is available.

Field: Gas Burner Efficiency of the Coil

This is user inputted gas burner efficiency (decimal, not percent) and is defaulted to 80%.

Field: Nominal Capacity of the Coil

This is the maximum capacity of the coil (W). This controlled coil will only provide the needed capacity to meet the control criteria whether it is temperature or capacity controlled. This field is autosizable.

Field: Coil_Air_Inlet_Node

The name of the air inlet to the water coil, i.e. Heating Coil Air Inlet Node.

Field: Coil_Air_Outlet_Node

The name of the air outlet from the water coil, i.e. Heating Coil Air Outlet Node.

Field: Coil_Temp_Setpoint_Node

If the coil is used in the air loop simulation and is temperature controlled by the Set Point Manager then the node that is the control node needs to be specified here.

Field: Parasitic Electric Load

This is the parasitic electric load associated with the gas coil operation, such as an inducer fan, etc.. This will be modified by the PLR to reflect the time of operation in a time step.

Field: Part Load Fraction Correlation (function of part load ratio)

This alpha field defines the name of a quadratic or cubic performance curve (Ref: Performance Curves) that parameterizes the variation of gas consumption rate by the heating coil as a function of the part load ratio (PLR, sensible heating load/nominal capacity of the heating coil). For any simulation time step, the nominal gas consumption rate (heating load/burner efficiency) is divided by the part-load fraction (PLF) if a part-load curve has been defined. The part-load curve accounts for efficiency losses due to transient coil operation.

The part-load fraction correlation should be normalized to a value of 1.0 when the part load ratio equals 1.0 (i.e., no efficiency losses when the heating coil runs continuously for the simulation time step). For PLR values between 0 and 1 (0 <= PLR < 1), the following rules apply:

PLF >= 0.7 and PLF >= PLR

If PLF < 0.7 a warning message is issued, the program resets the PLF value to 0.7, and the simulation proceeds. The runtime fraction of the heating coil is defined a PLR/PLF. If PLF < PLR, then a warning message is issues and the runtime fraction of the coil is limited to 1.0.

A typical part load fraction correlation for a conventional gas heating coil (e.g., residential furnace) would be:

PLF = 0.8 + 0.2(PLR)

Field: Parasitic Gas Load

This numeric field is the parasitic gas load associated with the gas coil's operation (Watts), such as a standing pilot light. The model assumes that this parasitic load is consumed only for the portion of the simulation time step where the gas heating coil is not operating.

```
COIL:Gas:Heating,
  A1 , \field Coil Name
       \required-field
       \type alpha
       \reference HeatingCoilName
  A2 , \field Available Schedule
       \required-field
       \type object-list
       \object-list ScheduleNames
  N1 , \field Gas Burner Efficiency of the Coil
       \maximum 1.0
       \minimum 0.0
       \default 0.8
  N2 , \field Nominal Capacity of the Coil
       \units W
       \autosizable
  A3 , \field Coil_Air_Inlet_Node
       \required-field
  A4 , \field Coil_Air_Outlet_Node
       \required-field
  A5 , \field Coil_Temp_Setpoint_Node
       \note optional if coil is temp and not load controlled
  N3 , \field Parasitic Electric Load
       \units W
       \note parasitic electric load associated with the gas coil operation
       \note such as an inducer fan, etc..  This will be modified by the PLR to reflect
       \note the time of operation in a time step.
  A6 , \field Part load fraction correlation (function of part load ratio)
       \type object-list
       \object-list QuadraticCurves
       \object-list CubicCurves
       \note quadratic curve, PLF = a + b*PLR + c*PLR**2
       \note cubic curve, PLF = a + b*PLR + c*PLR**2 + d*PLR**3
       \note PLR = part load ratio (sensible heating load/steady-state heating capacity)
       \note Coil runtime fraction = Part Load Ratio / PLF
       \note This part load degradation is for coil performance & will
       \note increase the gas consumption of the coil due to transient coil operation.
  N4 ; \field Parasitic Gas Load
       \units W
       \note parasitic gas load associated with the gas coil operation (i.e., standing pilot)
```

Gas Heating Coil Outputs

```
HVAC,Sum,Heating Coil Energy[J]
HVAC,Average,Heating Coil Rate[W]
HVAC,Sum,Heating Coil Gas Consumption [J]
HVAC,Average,Heating Coil Gas Consumption Rate [W]
HVAC,Sum,Heating Coil Electric Consumption [J]
HVAC,Average,Heating Coil Electric Power [W]
HVAC,Average,Heating Coil Runtime Fraction
HVAC,Sum,Heating Coil Parasitic Gas Consumption [J]
HVAC,Average,Heating Coil Parasitic Gas Consumption Rate [W]
```

Field: Heating Coil Energy [J]

This field is the total heating output of the coil in Joules over the time step being reported. This output is also added to a report meter with Resource Type = EnergyTransfer, End Use Key = HeatingCoils, Group Key = System (ref. Report Meter).

Field: Heating Coil Rate [W]

This field is the average heating rate output of the coil in Watts over the time step being reported.

Field: Heating Coil Gas Consumption [J]

This field is the gas consumption of the heating coil in Joules over the time step being reported, including the impacts of part-load performance if a part load fraction correlation is specified. This output is also added to a report meter with Resource Type = Gas, End Use Key = Heating, Group Key = System (ref. Report Meter).

Field: Heating Coil Gas Consumption Rate [W]

This field is the average gas consumption rate of the coil in Watts over the time step being reported, including the impacts of part-load performance if a part load fraction correlation is specified.

Field: Heating Coil Electric Consumption [J]

This field is the electric consumption of the heating coil auxiliaries in Joules over the time step being reported (e.g., inducer fan). This output is also added to a report meter with Resource Type = Electricity, End Use Key = Heating, Group Key = System (ref. Report Meter).

Field: Heating Coil Electric Power [W]

This field is the average electric consumption rate of the heating coil auxiliaries (e.g., inducer fan) in Watts over the time step being reported.

Field: Heating Coil Parasitic Gas Consumption [J]

This field is the parasitic gas consumption of the heating coil in Joules over the time step being reported (e.g., standing pilot light). The model assumes that the parasitic load is accumulated only for the portion of the simulation time step where the gas heating coil is not operating. This output is also added to a report meter with Resource Type = Gas, End Use Key = Miscellaneous, Group Key = System (ref. Report Meter).

Field: Heating Coil Parasitic Gas Consumption Rate [W]

This field is the average parasitic gas consumption rate of the heating coil (e.g., standing pilot light) in Watts over the time step being reported. The model assumes that the parasitic load is present only for the portion of the simulation time step where the gas heating coil is not operating.

Coil:Water:DetailedFlatCooling

This detailed flat fin coil model is for continuous plate fins. First, found in Type 12 from MODSIM, but now programmed directly from Elmahdy, A.H. and Mitalas, G.P. Then there was a discontinuity in their original model that was fixed in the EnergyPlus implementation. Now this model can be used in an interval halving solution technique for controlling this coil without the problems of non-convergence.

The following figures illustrate the geometry and circuits in a cooling coil.

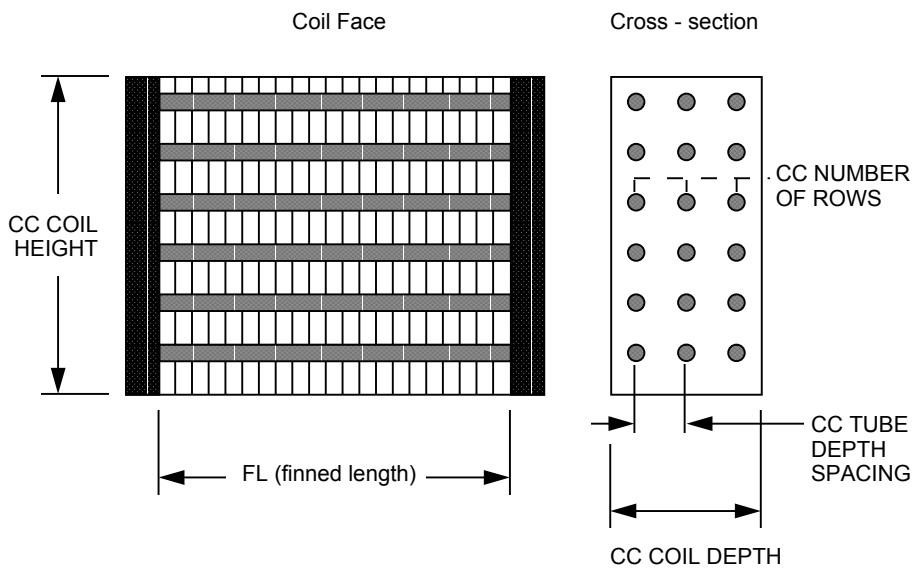

Figure 56. Geometry of a Cooling Coil (CC)

"A Model for Cooling and Dehumidifying Coils for Use in Energy Requirements for Buildings" ASHRAE Transactions, Vol. 83, Part 2, pp. 103-117 (1977). For fin efficiency see K.A. Gardner, "Efficiency of Extended ," Transactions ASME, Vol. 67, pp. 621-631, 1945.

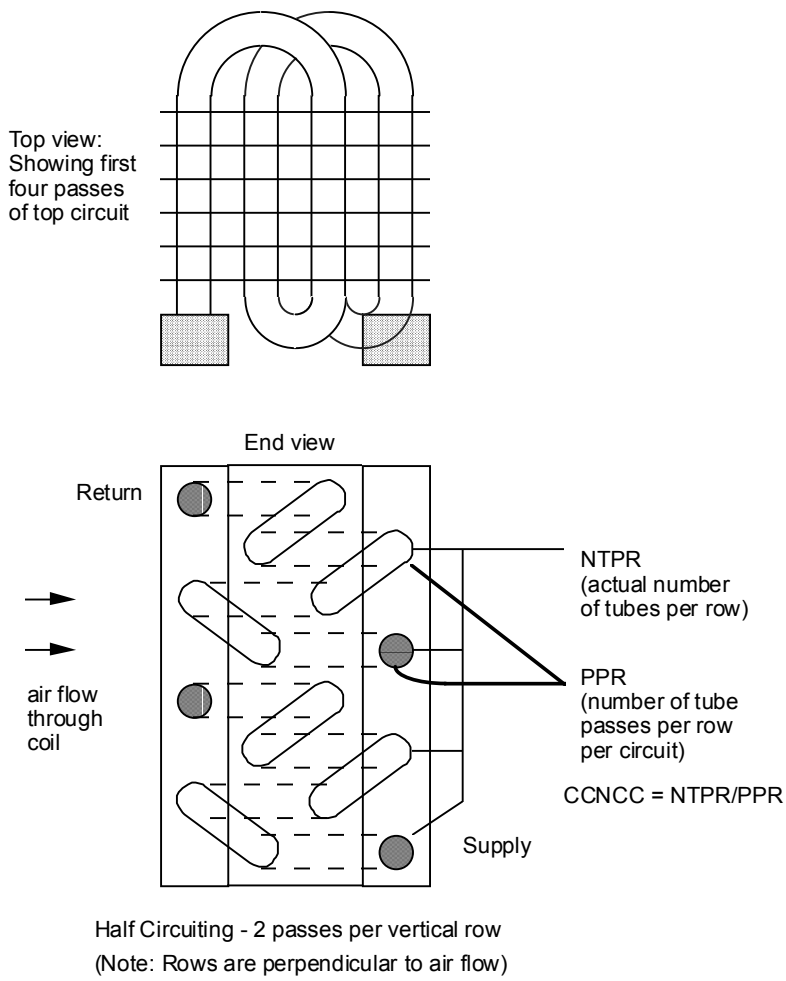

Figure 57.Number of Coolant Circuits (CCNCC)

Field: Coil Name

A unique identifying name for each coil.

Field: Available Schedule

Schedule that defines when the coil is available.

Field: Max Water Flow Rate of Coil

The maximum possible water flow rate (m^3/sec) through the coil.

Field: Tube Outside Surf Area

The outside surface area (m^2) of the tubes that is exposed to air (i.e. the outside area of the unfinned tubes minus the area of tubes covered by the fins).

Field: Total Tube Inside Area

The total surface area (m^2) inside the tubes (water side).

Field: Fin Surface Area

The total surface area (m^2) of the fins attached to the coil.

Field: Minimum Air Flow Area

The minimum cross sectional area (m^2) available for air passage. Frequently calculated as

$$A_{min} = (A_{min}/A_{fr})*A_{fr}$$

where A_{fr} is the frontal area of the heat exchanger, and (A_{min}/A_{fr}) is the ratio of the minimum airflow area to frontal area.

Field: Coil Depth

The distance (m) from the front of the coil to the back of the coil in the airflow direction. Also called the fin depth. Illustrated in the figure (Figure 56. Geometry of a Cooling Coil (CC)).

Field: Fin Diameter

The outside diameter (m) of the fins. Used instead of COIL HEIGHT

Field: Fin Thickness

Thickness (m) of the air side fins.

Field: Tube Inside Diameter

The inside diameter (m) of the tubes.

Field: Tube Outside Diameter

The outside diameter (m) of the tubes.

Field: Tube Thermal Conductivity

The thermal conductivity (W/m-K) of the tube material.

Field: Fin Thermal Conductivity

The thermal conductivity (W/m-K) of the fin material.

Field: Fin Spacing

The spacing (m) of the fins, centerline to centerline.

Field: Tube Depth Spacing

The spacing (m) of the tube rows, centerline to centerline. Also called tube longitudinal spacing.

Field: Number of Tube Rows

The number of tube rows in the direction of the airflow.

Field: Number of Tubes per Row

The number of tubes per row. (NTPR in the above diagram)

Field: Coil_Water_Inlet_Node

The name of the water coil inlet from the chilled water loop, i.e. Cooling Coil Water Inlet Node.

Field: Coil_Water_Outlet_Node

The name of the water coil outlet from the chilled water loop, i.e. Cooling Coil Water Outlet Node.

Field: Coil_Air_Inlet_Node

The name of the air inlet to the water coil, i.e. Cooling Coil Air Inlet Node.

Field: Coil_Air_Outlet_Node

The name of the air outlet from the water coil, i.e. Cooling Coil Air Outlet Node.

```
COIL:Water:DetailedFlatCooling,
  A1 , \field Coil Name
  A2 , \field Available Schedule
       \type object-list
       \object-list ScheduleNames
  N1 , \field Max Water Flow Rate of Coil
       \units m3/sec
  N2 , \field Tube Outside Surf Area
       \units m2
       \note Tube Primary Surface Area
  N3 , \field Total Tube Inside Area
       \units m2
       \note Total Tube inside Surface Area
  N4 , \field Fin Surface Area
       \units m2
  N5 , \field Minimum Air Flow Area
       \units m2
  N6 , \field Coil Depth
       \units m
  N7 , \field Fin Diameter
       \units m
       \note Fin Diameter or the Coil Height
  N8 , \field Fin Thickness
       \units m
  N9 , \field Tube Inside Diameter
       \units m
       \note Inner diameter of Tubes
  N10, \field Tube Outside Diameter
       \units m
       \note Outer Diameter of the Tubes
  N11, \field Tube Thermal Conductivity
       \units W/m-K
  N12, \field Fin Thermal Conductivity
       \units W/m-K
  N13, \field Fin Spacing
       \units m
       \note Fin Spacing or Distance
  N14, \field Tube Depth Spacing
       \units m
  N15, \field Number of Tube Rows
  N16, \field Number of Tubes per Row
  A3 , \field Coil_Water_Inlet_Node
  A4 , \field Coil_Water_Outlet_Node
  A5 , \field Coil_Air_Inlet_Node
  A6 ; \field Coil_Air_Outlet_Node
```

Examples of these statements in an IDF are:

```
COIL:Water:SimpleCooling,
         Main Cooling Coil,        !Name of cooling coil
         CoolingCoilAvailSched,    !Cooling Coil Schedule
         3000.0,                   !UA of the Coil
         0.0011,                   !Max Water Flow Rate of Coil m3/sec
         NODE_21, NODE_18,         !Coil Water Side Inlet & Outlet Node
         NODE_2, NODE_3;           !Coil Air Side Inlet & Outlet Node
COIL:Water:SimpleHeating,
         SimpleHeatingCoil,     !Name of heating coil
         FanAndCoilAvailSched,  !heating Coil Schedule
         1200.0,                !UA of the Coil
         0.0043,                !Max Water Flow Rate of Coil m3/sec
         NODE_27, NODE_26,      !Coil Water Side Inlet & Outlet Node
         NODE_3, NODE_4;        !Coil Air Side Inlet & Outlet Node
COIL:Water:DetailedFlatCooling,
      Detailed Cooling Coil,  !Name of cooling coil
      CoolingCoilAvailSched,  !Cooling Coil Schedule
      0.0011,          !Max Water Flow Rate of Coil m3/sec
      6.23816,         !Tube Outside Surf Area
      6.20007018,      !Tube Inside Surf Area
      101.7158224,     !Fin Surf Area
      0.300606367,     !Min Air Flow Area
      0.165097968,     !Coil Depth
      0.43507152,      !Coil Height
      0.001499982,     !Fin Thickness
      0.014449958,     !Tube Inside Diameter
      0.015879775,     !Tube Outside Diameter
      0.385764854,     !Tube Thermal Conductivity
      0.203882537,     !Fin Thermal Conductivity
      0.001814292,     !Fin Spacing
      0.02589977,      !Tube Depth
      6,               !Number of Tube Rows
      16,              !Number of Tubes per Row
      NODE_32,NODE_33, !Coil Water Side Inlet & Outlet Node
      NODE_5, NODE_6;  !Coil Air Side Inlet & Outlet Node
```

Detailed Water Coil Outputs

```
HVAC,Sum,Total Water Cooling Coil Energy[J]
HVAC,Sum,Sensible Water Cooling Coil Energy[J]
HVAC,Average,Total Water Cooling Coil Rate[W]
HVAC,Average,Sensible Water Cooling Coil Rate[W]
```

Coil:DX:CoolingBypassFactorEmpirical

In release V1.0.0, this object was known as Coil:DX:BF-Empirical.

This DX cooling coil model and input are quite different from that for the heating and cooling water coils. The simple water coils use an NTU-effectiveness heat exchanger model. The CoolingBypassFactorEmpirical DX coil model uses performance information at rated conditions along with curve fits for variations in total capacity, energy input ratio and part-load fraction to determine performance at part-load conditions. Sensible/latent capacity splits are determined by the rated sensible heat ratio (SHR) and the apparatus dew point/bypass factor (ADP/BF) approach. This approach is analogous to the NTU-effectiveness calculations used for sensible-only heat exchanger calculations, extended to a cooling and dehumidifying coil.

The DX cooling coil input requires an availability schedule, the rated total cooling capacity, the rated SHR, the rated COP, and the rated air flow volume rate. The latter 4 inputs determine the coil performance at the rating point (outside drybulb 35 C, entering drybulb 26.7 C, entering wetbulb 19.4C). The rated air flow volume should be between .00004699 m3/s and .00006041 m3/s per watt of rated total cooling capacity.

This model requires 5 curves as follows:

1. The total cooling capacity modifier curve (function of temperature) is a biquadratic curve with two independent variables: wetbulb temperature of the air entering the cooling coil,

and drybulb temperature of the air entering the air-cooled condenser. The output of this curve is multiplied by the rated total cooling capacity to give the total cooling capacity at specific temperature operating conditions (i.e., at temperatures different from the rating point temperatures).

2. The total cooling capacity modifier curve (function of flow fraction) is a quadratic curve with the independent variable being the ratio of the actual air flow rate across the cooling coil to the rated air flow rate (i.e., fraction of full load flow). The output of this curve is multiplied by the rated total cooling capacity and the total cooling capacity modifier curve (function of temperature) to give the total cooling capacity at the specific temperature and air flow conditions at which the coil is operating.
3. The energy input ratio (EIR) modifier curve (function of temperature) is a biquadratic curve with two independent variables: wetbulb temperature of the air entering the cooling coil, and drybulb temperature of the air entering the air-cooled condenser. The output of this curve is multiplied by the rated EIR (inverse of the rated COP) to give the EIR at specific temperature operating conditions (i.e., at temperatures different from the rating point temperatures).
4. The energy input ratio (EIR) modifier curve (function of flow fraction) is a quadratic curve with the independent variable being the ratio of the actual air flow rate across the cooling coil to the rated air flow rate (i.e., fraction of full load flow). The output of this curve is multiplied by the rated EIR (inverse of the rated COP) and the EIR modifier curve (function of temperature) to give the EIR at the specific temperature and air flow conditions at which the coil is operating.
5. The part load fraction correlation (function of part load ratio) is a quadratic or a cubic curve with the independent variable being part load ratio (sensible cooling load / steady-state sensible cooling capacity). The output of this curve is used in combination with the rated EIR and EIR modifier curves to give the “effective” EIR for a given simulation time step. The part load fraction (PLF) correlation accounts for efficiency losses due to compressor cycling. The curve should be normalized to a value of 1.0 when the part-load ratio equals 1.0 (i.e., the compressor(s) run continuously for the simulation time step).

The curves are simply specified by name. Curve inputs are described in the curve manager section of this document (see Group – Performance Curves).

The final input item for this DX cooling coil object is the supply air fan operation mode. Either the supply air fan runs continuously while the DX coil cycles on/off, or the fan and coil cycle on/off together.

Field: Coil Name

A unique user assigned name for an instance of a DX cooling coil . Any reference to this DX coil by another object will use this name.

Field: Availability Schedule

The name of the schedule (ref: Schedule) that denotes whether the DX cooling coil can run during a given hour. A schedule value greater than 0 (usually 1 is used) indicates that the unit can be on during the hour. A value less than or equal to 0 (usually 0 is used) denotes that the unit must be off for the hour.

Field: Rated Total Cooling Capacity (gross)

The total, full load cooling capacity (sensible plus latent) in watts of the DX coil unit at rated conditions (outside drybulb 35 C, entering drybulb 26.7 C, entering wetbulb 19.4 C, and a cooling coil air flow rate defined by field “rated air flow volume” below). Capacity should be “gross” (i.e., supply air fan heat is NOT included).

Field: Rated SHR

The sensible heat ratio (sensible capacity divided by total cooling capacity) of the DX cooling coil at rated conditions (outside drybulb 35 C, entering drybulb 26.7 C, entering wetbulb 19.4 C, and a cooling coil air flow rate defined by field "rated air flow volume" below). Both the sensible and total cooling capacities used to define the Rated SHR should be "gross" (i.e., supply air fan heat is NOT included).

Field: Rated COP

The coefficient of performance (cooling power output in watts divided by electrical power input in watts) of the DX cooling coil unit at rated conditions (outside drybulb 35 C, entering drybulb 26.7 C, entering wetbulb 19.4 C, and a cooling coil air flow rate defined by field "rated air flow volume" below). The input power includes power for the compressor(s) and condenser fan(s) but does not include the power consumption of the supply air fan. The cooling power output is the valued entered above in the field "Rated Total Cooling Capacity (gross)". If this input field is left blank, the default value is 3.0.

Field: Rated Air Volume Flow Rate

The volume air flow rate, in m^3 per second, across the DX cooling coil at rated conditions. The rated air volume flow rate should be between 0.00004699 m^3/s and 0.00006041 m^3/s per watt of rated total cooling capacity. The rated total cooling capacity, rated SHR and rated COP should be performance information for the unit with outside drybulb temperature of 35C, air entering the cooling coil at 26.7C drybulb/19.4C wetbulb, and the rated air volume flow rate defined here.

Field: Coil Air Inlet Node

The name of the HVAC system node from which the DX cooling coil draws its inlet air.

Field: Coil Air Outlet Node

The name of the HVAC system node to which the DX cooling coil sends its outlet air.

Field: Total Cooling Capacity Modifier Curve (function of temperature)

The name of a biquadratic performance curve (ref: Performance Curve) that parameterizes the variation of the total cooling capacity as a function of the wetbulb temperature of the air entering the cooling coil, and the drybulb temperature of the air entering the air-cooled condenser (usually just the outside air temperature, but could be modified for roof-mounted condensers). The output of this curve is multiplied by the rated total cooling capacity to give the total cooling capacity at specific temperature operating conditions (i.e., at temperatures different from the rating point temperatures). The curve is normalized to have the value of 1.0 at the rating point.

Field: Total Cooling Capacity Modifier Curve (function of flow fraction)

The name of a quadratic performance curve (ref: Performance Curves) that parameterizes the variation of total cooling capacity as a function of the ratio of actual air flow rate across the cooling coil to the rated air flow rate (i.e., fraction of full load flow). The output of this curve is multiplied by the rated total cooling capacity and the total cooling capacity modifier curve (function of temperature) to give the total cooling capacity at the specific temperature and air flow conditions at which the coil is operating. The curve is normalized to have the value of 1.0 when the actual air flow rate equals the rated air flow rate.

Field: Energy Input Ratio Modifier Curve (function of temperature)

The name of a biquadratic performance curve (ref: Performance Curves) that parameterizes the variation of the energy input ratio (EIR) as a function of the wetbulb temperature of the air entering the cooling coil and the drybulb temperature of the air entering the air-cooled condenser (usually just the outside air temperature). The EIR is the inverse of the COP. The output of this curve is multiplied by the rated EIR (inverse of rated COP) to give the EIR at specific temperature operating conditions (i.e., at temperatures different from the rating point temperatures). The curve is normalized to a value of 1.0 at the rating point.

Field: Energy Input Ratio Modifier Curve (function of flow fraction)

The name of a quadratic performance curve (Ref: Performance Curves) that parameterizes the variation of the energy input ratio (EIR) as a function of the ratio of actual air flow rate across the cooling coil to the rated air flow rate (i.e., fraction of full load flow). The EIR is the inverse of the COP. The output of this curve is multiplied by the rated EIR and the EIR modifier curve (function of temperature) to give the EIR at the specific temperature and air flow conditions at which the cooling coil is operating. This curve is normalized to a value of 1.0 when the actual air flow rate equals the rated air flow rate.

Field: Part Load Fraction Correlation (function of part load ratio)

This alpha field defines the name of a quadratic or cubic performance curve (Ref: Performance Curves) that parameterizes the variation of electrical power input to the DX unit as a function of the part load ratio (PLR, sensible cooling load/steady-state sensible cooling capacity). The product of the rated EIR and EIR modifier curves is divided by the output of this curve to give the “effective” EIR for a given simulation time step. The part load fraction (PLF) correlation accounts for efficiency losses due to compressor cycling.

The part-load fraction correlation should be normalized to a value of 1.0 when the part load ratio equals 1.0 (i.e., no efficiency losses when the compressor(s) run continuously for the simulation time step). For PLR values between 0 and 1 (0 <= PLR < 1), the following rules apply:

PLF >= 0.7 and PLF >= PLR

If PLF < 0.7 a warning message is issued, the program resets the PLF value to 0.7, and the simulation proceeds. The runtime fraction of the coil is defined a PLR/PLF. If PLF < PLR, then a warning message is issued and the runtime fraction of the coil is limited to 1.0.

A typical part load fraction correlation for a conventional, single-speed DX cooling coil (e.g., residential unit) would be:

PLF = 0.75 + 0.25(PLR)

Field: Supply Air Fan Operation Mode

This input field has two choices: CycFanCycComp or ContFanCycComp. The first choice stands for “cycling fan cycling compressor”. This means that the unit unloads by cycling both the fan and compressor; that is, both the supply fan and the DX coil unit compressor cycle on and off together to meet the load. The second choice stands for “continuous fan cycling compressor”. The supply fan runs continuously while the DX coil unit compressor cycles.

Below is the input data dictionary description for the CoolingBypassFactorEmpirical DX coil.

```
COIL:DX:CoolingBypassFactorEmpirical,
  \min-fields 14
  A1 , \field Coil Name
       \required-field
       \type alpha
  A2 , \field Availability Schedule
       \required-field
       \type object-list
       \object-list ScheduleNames
  N1 , \field Rated Total Cooling Capacity (gross)
       \required-field
       \type real
       \units W
       \minimum> 0.0
       \autosizable
       \note gross capacity excluding supply air fan heat
       \note rating point outside drybulb 35 C
       \note rating point entering drybulb 26.7 C
       \note rating point entering wetbulb 19.4 C
  N2 , \field Rated SHR
       \required-field
       \type real
       \minimum 0.5
       \maximum 1.0
       \autosizable
       \note rated sensible heat ratio (gross sensible capacity/gross total capacity)
       \note sensible and total capacities do not include supply fan heat
  N3 , \field Rated COP
       \type real
       \minimum> 0.0
       \default 3.0
       \note does not include supply fan heat or supply fan electrical energy input
  N4 , \field Rated Air Volume Flow Rate
       \required-field
       \type real
       \units m3/s
       \minimum> 0.0
       \autosizable
       \note volume flow rate corresponding to Rated total cooling capacity, Rated SHR and Rated COP
       \note should be between 0.00004699 m3/s and .00006041 m3/s per watt of rated total cooling capacity
  A3 , \field Coil Air Inlet Node
       \required-field
       \type alpha
  A4 , \field Coil Air Outlet Node
       \required-field
       \type alpha
  A5 , \field Total Cooling Capacity Modifier Curve (function of temperature)
       \required-field
       \type object-list
       \object-list BiquadraticCurves
       \note curve = a + b*wb + c*wb**2 + d*edb + e*edb**2 + f*wb*edb
       \note wb = entering wetbulb temperature (C)
       \note edb = drybulb temperature seen by the condenser (C)
  A6 , \field Total Cooling Capacity Modifier Curve (function of flow fraction)
       \required-field
       \type object-list
       \object-list QuadraticCurves
       \note curve = a + b*ff + c*ff**2
       \note ff = fraction of the full load flow
  A7 , \field Energy Input Ratio Modifier Curve (function of temperature)
       \required-field
       \type object-list
       \object-list BiquadraticCurves
       \note curve = a + b*wb + c*wb**2 + d*edb + e*edb**2 + f*wb*edb
       \note wb = entering wetbulb temperature (C)
       \note edb = drybulb temperature seen by the condenser (C)
  A8 , \field Energy Input Ratio Modifier Curve (function of flow fraction)
       \required-field
       \type object-list
       \object-list QuadraticCurves
       \note curve = a + b*ff + c*ff**2
```

```
       \note ff = fraction of the full load flow
  A9 , \field Part Load Fraction Correlation (function of part load ratio)
       \required-field
       \type object-list
       \object-list QuadraticCurves
       \object-list CubicCurves
       \note quadratic curve = a + b*PLR + c*PLR**2
       \note cubic curve = a + b*PLR + c*PLR**2 + d*PLR**3
       \note PLR = part load ratio (cooling load/steady-state capacity)
  A10; \field Supply Air Fan Operation Mode
       \required-field
       \type choice
       \key CycFanCycComp
       \key ContFanCycComp
```

Following is an example input for a CoolingBypassFactorEmpirical DX coil.

```
COIL:DX:CoolingBypassFactorEmpirical,
       Zone1WindACDXCoil,        ! Coil name
       FanAndCoilAvailSched,     ! coil on/off schedule
       10548,      ! rated total cooling capacity (3 tons)
       0.75,       ! rated sensible heat ratio
       3.0,        ! rated COP
       0.637,      ! rated air flow rate (m3/s)
       Zone1WindACFanOutletNode, ! coil air inlet mode
       Zone1WindACAirOutletNode, ! coil air outlet node
       WindACCoolCapFT,          ! cooling cap modifier curve (temperature)
       WindACCoolCapFFF,         ! cooling cap modifier curve (flow fraction)
       WindACEIRFT,              ! energy input ratio modifier curve (temperature)
       WindACEIRFFF,             ! energy input ratio modifier curve (flow fraction)
       WindACPLFFPLR,            ! part load factor modifier curve (part load ratio)
       ContFanCycComp;           ! supply air fan operation mode
```

DX Cooling Coil Outputs

```
HVAC,Average,DX Coil Total Cooling Rate[W]
HVAC,Sum,DX Coil Total Cooling Energy[J]
HVAC,Average,DX Coil Sensible Cooling Rate[W]
HVAC,Sum,DX Coil Sensible Cooling Energy[J]
HVAC,Average,DX Coil Latent Cooling Rate[W]
HVAC,Sum,DX Coil Latent Cooling Energy[J]
HVAC,Average,DX Cooling Coil Electric Power[W]
HVAC,Sum,DX Cooling Coil Electric Consumption[J]
HVAC,Average,DX Cooling Coil Runtime Fraction
```

Field: DX Coil Total Cooling Rate [W]

This field is the total (sensible and latent) cooling rate output of the DX coil in Watts. This is determined by the coil inlet and outlet air conditions and the air mass flow rate through the coil.

Field: DX Coil Total Cooling Energy [J]

This is the total (sensible plus latent) cooling output of the DX coil in Joules over the time step being reported. This is determined by the coil inlet and outlet air conditions and the air mass flow rate through the coil. This output is also added to a report meter with Resource Type = EnergyTransfer, End Use Key = CoolingCoils, Group Key = System (Ref. Report Meter).

Field: DX Coil Sensible Cooling Rate [W]

This output is the moist air sensible cooling rate output of the DX coil in Watts. This is determined by the inlet and outlet air conditions and the air mass flow rate through the coil.

Field: DX Coil Sensible Cooling Energy [J]

This is the moist air sensible cooling output of the DX coil in Joules for the time step being reported. This is determined by the inlet and outlet air conditions and the air mass flow rate through the coil.

Field: DX Coil Latent Cooling Rate [W]

This is the latent cooling rate output of the DX coil in Watts. This is determined by the inlet and outlet air conditions and the air mass flow rate through the coil.

Field: DX Coil Latent Cooling Energy [J]

This is the latent cooling output of the DX coil in Joules for the time step being reported. This is determined by the inlet and outlet air conditions and the air mass flow rate through the coil.

Field: DX Cooling Coil Electric Power [W]

This output is the electricity consumption rate of the DX coil compressor and condenser fan(s) in Watts.

Field: DX Cooling Coil Electric Consumption [J]

This is the electricity consumption of the DX coil compressor and condenser fan(s) in Joules for the time step being reported. This output is also added to a report meter with Resource Type = Electricity, End Use Key = Cooling, Group Key = System (Ref. Report Meter).

Field: DX Cooling Coil Runtime Fraction

This is the runtime fraction of the DX coil compressor and condenser fan(s) for the time step being reported.

Coil:DX:HeatingEmpirical

The HeatingEmpirical DX coil model uses performance information at rated conditions along with curve fits for variations in total capacity, energy input ratio and part load fraction to determine performance at part-load conditions. The impacts of various defrost strategies (reverse cycle, resistive, timed or on-demand) are modeled based on a combination of user inputs and empirical models taken from the air-to-air heat pump algorithms in DOE-2.1E.

The HeatingEmpirical DX coil input requires an availability schedule, the rated total heating capacity, the rated COP and the rated air volume flow rate. The latter 3 inputs determine the coil performance at the rating point (outside air dry-bulb temperature of 8.33 C, outside air wet-bulb temperature of 6.11 C, coil entering air dry-bulb temperature of 21.11 C, coil entering air wet-bulb temperature of 15.55 C). The rated air volume flow rate should be between .00004699 m^3/s and .00006041 m^3/s per watt of rated total heating capacity.

Up to 6 curves are required depending on the defrost strategy selected.

1) The total heating capacity modifier curve (function of temperature) is a quadratic or cubic curve with a single independent variable: outdoor air dry-bulb temperature. The output of this curve is multiplied by the rated total heating capacity to give the total heating capacity at specific temperature operating conditions (i.e., at an outdoor air temperature different from the rating point temperature).

2) The total heating capacity modifier curve (function of flow fraction) is a quadratic or cubic curve with the independent variable being the ratio of the actual air flow rate across the heating coil to the rated air flow rate (i.e., fraction of full load flow). The output of this curve is multiplied by the rated total heating capacity and the total heating capacity

modifier curve (function of temperature) to give the total heating capacity at the specific temperature and air flow conditions at which the coil is operating.

3) The energy input ratio (EIR) modifier curve (function of temperature) is a quadratic or cubic curve with the independent variable being the outdoor air dry-bulb temperature. The output of this curve is multiplied by the rated EIR (inverse of the rated COP) to give the EIR at specific temperature operating conditions (i.e., at an outdoor air dry-bulb temperature different from the rating point temperature).

4) The energy input ratio (EIR) modifier curve (function of flow fraction) is a quadratic or cubic curve with the independent variable being the ratio of the actual air flow rate across the heating coil to the rated air flow rate (i.e., fraction of full load flow). The output of this curve is multiplied by the rated EIR (inverse of the rated COP) and the EIR modifier curve (function of temperature) to give the EIR at the specific temperature and air flow conditions at which the coil is operating.

5) The part load fraction correlation (function of part load ratio) is a quadratic or cubic curve with the independent variable being part load ratio (sensible heating load / steady-state heating capacity). The output of this curve is used in combination with the rated EIR and EIR modifier curves to give the “effective” EIR for a given simulation time step. The part load fraction correlation accounts for efficiency losses due to compressor cycling.

6) The defrost energy input ratio (EIR) modifier curve (function of temperature) is a bi-quadratic curve with two independent variables: outdoor air dry-bulb temperature and the heating coil entering air wet-bulb temperature. The output of this curve is multiplied by the heating coil capacity and the fractional defrost time period to give the defrost power at the specific temperatures at which the coil is operating. This curve is only required when a reverse-cycle defrost strategy is specified.

The curves are simply specified by name. Curve inputs are described in the curve manager section of this document (ref. Performance Curves).

The next input item for the HeatingEmpirical DX coil is the supply air fan operation mode. Either the supply air fan runs continuously while the DX coil cycles on/off, or the fan and coil cycle on/off together. The next two inputs define the minimum outdoor dry-bulb temperature that the heat pump compressor will operate and the maximum outdoor dry-bulb temperature for defrost operation. Crankcase heater capacity and cutout temperature are entered in the following two inputs. The final four inputs cover the type of defrost strategy (reverse-cycle or resistive), defrost control (timed or on-demand), the fractional defrost time period (timed defrost control only), and the resistive defrost heater capacity if a resistive defrost strategy is selected.

Field: Coil Name

This alpha field defines a unique user-assigned name for an instance of a DX heating coil. Any reference to this DX heating coil by another object will use this name.

Field: Availability Schedule

This alpha field defines the name of the schedule (ref: Schedule) that denotes whether the DX heating coil can run during a given hour. A schedule value greater than 0 (usually 1 is used) indicates that the unit can be on during the hour. A value less than or equal to 0 (usually 0 is used) denotes that the unit must be off for the hour.

Field: Rated Total Heating Capacity

This numeric field defines the total, full load heating capacity in watts of the DX coil unit at rated conditions (outside air dry-bulb temperature of 8.33 C, outside air wet-bulb temperature of 6.11 C, heating coil entering air dry-bulb temperature of 21.11 C, heating coil entering air wet-bulb temperature of 15.55 C, and a heating coil air flow rate defined by field “rated air

flow volume" below). The value entered here must be greater than 0. Capacity should not include supply air fan heat.

Field: Rated COP

This numeric field defines the coefficient of performance (heating power output in watts divided by electrical power input in watts) of the DX heating coil unit at rated conditions (outside air dry-bulb temperature of 8.33 C, outside air wet-bulb temperature of 6.11 C, coil entering air dry-bulb temperature of 21.11 C, coil entering air wet-bulb temperature of 15.55 C, and a heating coil air flow rate defined by field "rated air flow volume rate" below). The value entered here must be greater than 0. The input power includes power for the compressor(s) and outdoor fan(s) but does not include the power consumption of the indoor supply air fan. The heating power output is the value entered above in the field "Rated Total Heating Capacity".

Field: Rated Air Volume Flow Rate

This numeric field defines the volume air flow rate, in m^3 per second, across the DX heating coil at rated conditions. The value entered here must be greater than 0. The rated air volume flow rate should be between 0.00004699 m^3/s and 0.00006041 m^3/s per watt of rated total heating capacity. The rated total heating capacity and rated COP should be performance information for the unit with outside air dry-bulb temperature of 8.33 C, outside air wet-bulb temperature of 6.11 C, heating coil entering air dry-bulb temperature of 21.11 C, heating coil entering air wet-bulb temperature of 15.55 C, and the rated air volume flow rate defined here.

Field: Coil Air Inlet Node

This alpha field defines the name of the HVAC system node from which the DX heating coil draws its inlet air.

Field: Coil Air Outlet Node

This alpha field defines the name of the HVAC system node to which the DX heating coil sends its outlet air.

Field: Total Heating Capacity Modifier Curve (function of temperature)

This alpha field defines the name of a quadratic or cubic performance curve (ref: Performance Curves) that parameterizes the variation of the total heating capacity as a function of the outdoor air dry-bulb temperature. The output of this curve is multiplied by the rated total heating capacity to give the total heating capacity at specific temperature operating conditions (i.e., at an outdoor air dry-bulb temperature different from the rating point temperature). The curve is normalized to have the value of 1.0 at the rating point.

Field: Total Heating Capacity Modifier Curve (function of flow fraction)

This alpha field defines the name of a quadratic or cubic performance curve (ref: Performance Curves) that parameterizes the variation of total heating capacity as a function of the ratio of actual air flow rate across the heating coil to the rated air flow rate (i.e., fraction of full load flow). The output of this curve is multiplied by the rated total heating capacity and the total heating capacity modifier curve (function of temperature) to give the total heating capacity at the specific temperature and air flow conditions at which the coil is operating. The curve is normalized to have the value of 1.0 when the actual air flow rate equals the rated air flow rate.

Field: Energy Input Ratio Modifier Curve (function of temperature)

This alpha field defines the name of a quadratic or cubic performance curve (ref: Performance Curves) that parameterizes the variation of the energy input ratio (EIR) as a

function of the outdoor air dry-bulb temperature. The EIR is the inverse of the COP. The output of this curve is multiplied by the rated EIR (inverse of rated COP) to give the EIR at specific temperature operating conditions (i.e., at an outdoor air dry-bulb temperature different from the rating point temperature). The curve is normalized to a value of 1.0 at the rating point.

Field: Energy Input Ratio Modifier Curve (function of flow fraction)

This alpha field defines the name of a quadratic or cubic performance curve (ref: Performance Curves) that parameterizes the variation of the energy input ratio (EIR) as a function of the ratio of actual air flow rate across the heating coil to the rated air flow rate (i.e., fraction of full load flow). The EIR is the inverse of the COP. The output of this curve is multiplied by the rated EIR and the EIR modifier curve (function of temperature) to give the EIR at the specific temperature and air flow conditions at which the coil is operating. This curve is normalized to a value of 1.0 when the actual air flow rate equals the rated air flow rate.

Field: Part Load Fraction Correlation (function of part load ratio)

This alpha field defines the name of a quadratic or cubic performance curve (ref: Performance Curves) that parameterizes the variation of electrical power input to the DX heating coil unit as a function of the part load ratio (PLR, sensible heating load/steady-state sensible heating capacity). The product of the rated EIR and EIR modifier curves is divided by the output of this curve to give the “effective” EIR for a given simulation time step. The part load fraction correlation accounts for efficiency losses due to compressor cycling.

The part-load fraction correlation should be normalized to a value of 1.0 when the part load ratio equals 1.0 (i.e., no efficiency losses when the compressor(s) run continuously for the simulation time step). For PLR values between 0 and 1 (0 <= PLR < 1), the following rules apply:

PLF >= 0.7 and PLF >= PLR

If PLF < 0.7 a warning message is issued, the program resets the PLF value to 0.7, and the simulation proceeds. The runtime fraction of the coil is defined a PLR/PLF. If PLF < PLR, then a warning message is issued and the runtime fraction of the coil is limited to 1.0.

A typical part load fraction correlation for a conventional, single-speed DX heating coil (e.g., residential heat pump) would be:

PLF = 0.75 + 0.25(PLR)

Field: Defrost Energy Input Ratio Modifier Curve (function of temperature)

This alpha field defines the name of a bi-quadratic performance curve (ref: Performance Curves) that parameterizes the variation of the energy input ratio (EIR) during reverse-cycle defrost periods as a function of the outdoor air dry-bulb temperature and the wet-bulb temperature of the air entering the indoor coil. The EIR is the inverse of the COP. The output of this curve is multiplied by the coil capacity and the fractional defrost time period to give the defrost power at the specific temperatures at which the indoor and outdoor coils are operating. This curve is only required when a reverse-cycle defrost strategy is selected. The curve is normalized to a value of 1.0 at the rating point conditions.

Field: Supply Air Fan Operation Mode

This alpha field has two choices: CycFanCycComp or ContFanCycComp. The first choice stands for “cycling fan cycling compressor”. This means that the unit unloads by cycling both the fan and compressor; that is, both the supply fan and the heating coil compressor cycle on and off together to meet the load. The second choice stands for “continuous fan cycling compressor”. The supply fan runs continuously while the heating coil compressor cycles.

Field: Minimum Outdoor Dry-bulb Temperature for Compressor Operation

This numeric field defines the minimum outdoor air dry-bulb temperature where the heating coil compressor turns off. The temperature for this input field must be greater than or equal to –20 C. If this input field is left blank, the default value is -8 C.

Field: Maximum Outdoor Dry-bulb Temperature for Defrost Operation

This numeric field defines the outdoor air dry-bulb temperature above which outdoor coil defrosting is disabled. The temperature for this input field must be greater than or equal to 0 C and less than or equal to 7.22 C. If this input field is left blank, the default value is 5 C.

Field: Crankcase Heater Capacity

This numeric field defines the crankcase heater capacity in Watts. When the outdoor air dry-bulb temperature is below the value specified in the input field "Maximum Outdoor Dry-bulb Temperature for Crankcase Heater Operation" (described below), the crankcase heater is enabled during the time that the compressor is not running. The value for this input field must be greater than or equal to 0. If this input field is left blank, the default value is 0. To simulate a unit without a crankcase heater, enter a value of 0.

Field: Maximum Outdoor Dry-bulb Temperature for Crankcase Heater Operation

This numeric field defines the outdoor air dry-bulb temperature above which the compressor's crankcase heater is disabled. The value for this input field must be greater than or equal to 0.0 C. If this input field is left blank, the default value is 10 C.

Field: Defrost Strategy

This alpha field has two choices: reverse-cycle or resistive. If the reverse-cycle strategy is selected, the heating cycle is reversed periodically to provide heat to melt frost accumulated on the outdoor coil. If a resistive defrost strategy is selected, the frost is melted using an electric resistance heater. If this input field is left blank, the default defrost strategy is reverse-cycle.

Field: Defrost Control

This alpha field has two choices: timed or on-demand. If timed control is selected, the defrost time period is calculated based on a fixed value whether or not frost has actually accumulated. For timed defrost control, the fractional amount of time the unit is in defrost is entered in the input field "Defrost Time Period Fraction" described below. If on-demand defrost control is selected, the defrost time period is calculated based on outdoor weather (humidity ratio) conditions. Regardless of which defrost control is selected, defrost does not occur above the user specified outdoor temperature entered in the input field "Maximum Outdoor Dry-bulb Temperature for Defrost Operation" described above. If this input field is left blank, the default defrost control is timed.

Field: Defrost Time Period Fraction

This numeric field defines the fraction of the time when the defrost cycle is active, and only applied to "timed" defrost (see Defrost Control input field above). The value for this input field must be greater than or equal to 0. If this input field is left blank, the default value is 0.058333.

Field: Resistive Defrost Heater Capacity

This numeric field defines the capacity of the resistive defrost heating element in Watts. This input field is used only when the selected defrost strategy is 'resistive' (see input field "Defrost Strategy" above). The value for this input field must be greater than or equal to 0. If this input field is left blank, the default value is 0.

Below is the input data dictionary description of the DX heating coil.

```
COIL:DX:HeatingEmpirical,
       \min-fields 22
  A1 , \field Coil Name
       \required-field
       \type alpha
  A2 , \field Availability Schedule
       \required-field
       \type object-list
       \object-list ScheduleNames
  N1 , \field Rated Total Heating Capacity
       \required-field
       \type real
       \units W
       \minimum> 0.0
       \note capacity excluding supply air fan heat
       \note rating point outside dry-bulb temp 8.33 C, outside wet-bulb temp 6.11 C
       \note rating point heating coil entering air dry-bulb 21.11 C, coil entering wetbulb 15.55 C
  N2 , \field Rated COP
       \required-field
       \type real
       \minimum> 0.0
       \note does not include supply air fan heat or supply air fan electrical energy
```

```
 N3 , \field Rated Air Volume Flow Rate
      \required-field
      \type real
      \units m3/s
      \minimum> 0.0
      \note volume flow rate corresponding to rated total capacity
      \note should be between 0.00004699 m3/s and .00006041 m3/s per watt of rated total heating capacity
 A3 , \field Coil Air Inlet Node
      \required-field
      \type alpha
 A4 , \field Coil Air Outlet Node
      \required-field
      \type alpha
 A5 , \field Total heating capacity modifier curve (function of temperature)
      \required-field
      \type object-list
      \object-list QuadraticCurves
      \object-list CubicCurves
      \note quadratic curve = a + b*oat + c*oat**2
      \note cubic curve = a + b*oat + c*oat**2 + d*oat**3
      \note oat = outdoor air dry-bulb temperature (C)
 A6 , \field Total heating capacity modifier curve (function of flow fraction)
      \required-field
      \type object-list
      \object-list QuadraticCurves
      \object-list CubicCurves
      \note quadratic curve = a + b*ff + c*ff**2
      \note cubic curve = a + b*ff + c*ff**2 + d*ff**3
      \note ff = fraction of the full load flow
 A7 , \field Energy input ratio modifier curve (function of temperature)
      \required-field
      \type object-list
      \object-list QuadraticCurves
      \object-list CubicCurves
      \note quadratic curve = a + b*oat + c*oat**2
      \note cubic curve = a + b*oat + c*oat**2 + d*oat**3
      \note oat = outdoor air dry-bulb temperature (C)
 A8 , \field Energy input ratio modifier curve (function of flow fraction)
      \required-field
      \type object-list
      \object-list QuadraticCurves
      \object-list CubicCurves
      \note quadratic curve = a + b*ff + c*ff**2
      \note cubic curve = a + b*ff + c*ff**2 + d*ff**3
      \note ff = fraction of the full load flow
 A9 , \field Part load fraction correlation (function of part load ratio)
      \required-field
      \type object-list
      \object-list QuadraticCurves
      \object-list CubicCurves
      \note quadratic curve = a + b*PLR + c*PLR**2
      \note cubic curve = a + b*PLR + c*PLR**2 + d*PLR**3
      \note PLR = part load ratio (sensible heating load/steady-state heating capacity)
A10 , \field Defrost energy input ratio modifier curve (function of temperature)
      \type object-list
      \object-list BiquadraticCurves
      \note bi-quadratic curve = a + b*wb + c*wb**2 + d*oat + e*oat**2 +f*wb*oat
      \note wb = wet-bulb temperature (C) of air entering the indoor coil
      \note oat = outdoor air dry-bulb temperature (C)
      \note only required if reverse-cycle defrost strategy is specified
A11 , \field Supply Air Fan Operation Mode
      \required-field
      \type choice
      \key CycFanCycComp
      \key ContFanCycComp
 N4 , \field Minimum Outdoor Dry-bulb Temperature for Compressor Operation
      \type real
      \Minimum -20.0
      \Default -8.0
      \units C
 N5 , \field Maximum Outdoor Dry-bulb Temperature for Defrost Operation
```

```
      \type real
      \Minimum 0.0
      \Maximum 7.22
      \Default 5.0
      \units C
 N6 , \field Crankcase Heater Capacity
      \type real
      \Minimum 0.0
      \Default 0.0
      \units W
 N7 , \field Maximum Outdoor Dry-bulb Temperature for Crankcase Heater Operation
      \type real
      \Minimum 0.0
      \Default 10.0
      \units C
A12 , \field Defrost Strategy
      \type choice
      \key reverse-cycle
      \key resistive
      \default reverse-cycle
A13 , \field Defrost Control
      \type choice
      \key timed
      \key on-demand
      \default timed
 N8 , \field Defrost Time Period Fraction
      \type real
      \Minimum 0.0
      \Default 0.058333
      \note fraction of time in defrost mode
      \note only applicable if timed defrost control is specified
 N9;  \field Resistive Defrost Heater Capacity
      \type real
      \Minimum 0.0
      \Default 0.0
      \units W
      \note only applicable if resistive defrost strategy is specified
```

Following is an example input for a Heating Empirical DX coil.

```
COIL:DX:HEATINGEMPIRICAL,
  Heat Pump DX Heating Coil 1,   !Name of heating coil
  FanAndCoilAvailSched,          !Heating coil schedule
  35000,                         !Nominal capacity of the heating coil
  2.75,                          !rated heating COP
  1.7,                           !rated air flow rate (m3/s)
  Heating Coil Air Inlet Node,   !heating coil air side inlet node
  SuppHeating Coil Air Inlet Node, !Heating coil air side outlet node
  HPACHeatCapFT,   ! heating cap modifier curve (temperature, C)
  HPACHeatCapFFF,  ! heating cap modifier curve (flow fraction)
  HPACHeatEIRFT,   ! energy input ratio modifier curve (temperature, C)
  HPACHeatEIRFFF,  ! energy input ratio modifier curve (flow fraction)
  HPACCOOLPLFFPLR, ! part load fraction modifier curve (function of part load ratio)
  ,         ! defrost EIR modifier curve (temp, C) not required for resistive defrost
  CycFanCycCoil,   ! fan operating mode
  -5.0,            ! minimum OAT for compressor operation  (C)
  5.0,             ! maximum outdoor dry-bulb temp for defrost operation (C)
  200.0,           ! Crankcase heater capacity (W)
  10.0,            ! Maximum outdoor temp for crankcase heater operation (C)
  Resistive,       ! Defrost strategy (resistive or reverse-cycle)
  Timed,           ! Defrost control (timed or on-demand)
  0.166667,        ! Defrost time period fraction (used for timed defrost control
only)
  20000;! Resistive defrost heater capacity (used for resistive defrost strategy only)
```

DX Heating Coil Outputs

```
HVAC,Average,DX Coil Total Heating Rate[W]
HVAC,Sum,DX Coil Total Heating Energy[J]
HVAC,Average,DX Heating Coil Electric Power[W]
HVAC,Sum,DX Heating Coil Electric Consumption[J]
HVAC,Average,DX Heating Coil Electric Defrost Power[W]
HVAC,Sum,DX Heating Coil Electric Defrost Consumption[J]
HVAC,Average,DX Heating Coil Crankcase Heater Power[W]
HVAC,Sum,DX Heating Coil Crankcase Heater Consumption[J]
HVAC,Average,DX Heating Coil Runtime Fraction
```

Field: DX Coil Total Heating Rate [W]

This field is the total heating rate output of the DX coil in Watts. This is determined by the coil inlet and outlet air conditions and the air mass flow rate through the coil.

Field: DX Coil Total Heating Energy[J]

This is the total heating output of the DX coil in Joules over the time step being reported. This is determined by the coil inlet and outlet air conditions and the air mass flow rate through the coil. This output is also added to a report meter with Resource Type = EnergyTransfer, End Use Key = CoolingCoils, Group Key = System (ref. Report Meter).

Field: DX Heating Coil Electric Power[W]

This output is the electricity consumption rate of the DX coil compressor and outdoor fan(s) in Watts. This rate is applicable when the unit is providing heating to the conditioned zone(s), and excludes periods when the unit is in reverse-cycle defrost mode.

Field: DX Heating Coil Electric Consumption[J]

This is the electricity consumption of the DX coil compressor and condenser fan(s) in Joules for the time step being reported. This consumption is applicable when the unit is providing heating to the conditioned zone(s), and excludes periods when the unit is in reverse-cycle defrost mode. This output is also added to a report meter with Resource Type = Electricity, End Use Key = Cooling, Group Key = System (ref. Report Meter).

Field: DX Heating Coil Electric Defrost Power[W]

This is the electricity consumption rate of the DX coil unit in Watts when the unit is in defrost mode (reverse-cycle or resistive).

Field: DX Heating Coil Electric Defrost Consumption[J]

This is the electricity consumption of the DX coil unit in Joules for the time step being reported. This consumption is applicable when the unit is in defrost mode (reverse-cycle or resistive).

Field: DX Heating Coil Crankcase Heater Power[W]

This is the average electricity consumption rate of the DX coil compressor's crankcase heater in Watts for the time step being reported.

Field: DX Heating Coil Crankcase Heater Consumption[J]

This is the electricity consumption of the DX coil compressor's crankcase heater in Joules for the time step being reported. This output is also added to a report meter with Resource Type = Electricity, End Use Key = Miscellaneous, Group Key = System (ref. Report Meter).

Field: DX Heating Coil Runtime Fraction

This is the runtime fraction of the DX coil compressor and outdoor fan(s) for the time step being reported.

Group – Fans

A FAN may be defined either in the air loop or as a zone equipment component. The data that is common to the fan types shown below include an identifying name, an availability schedule, a total efficiency rating, a rated pressure drop, and inlet and outlet node names. In the case of a variable volume fan, additional input includes parameters for modeling fan performance over a range of speeds. See the engineering documentation for the variable speed fan for a further description of what these coefficients represent. Suggested values for different variable volume systems are shown in the following table.

Table 13. Fan Coefficient Values

Type of Fan	Fan Coeff. 1	Fan Coeff. 2	Fan Coeff. 3	Fan Coeff. 4	Fan Coeff. 5
Inlet Vane Dampers	0.35071223	0.30850535	-0.54137364	0.87198823	0.000
Discharge Dampers	0.37073425	0.97250253	-0.34240761	0.000	0.000
Var. Speed Motor	0.0015302446	0.0052080574	1.1086242	-0.11635563	0.000

Fan:Simple:Const Volume

Field: Fan Name

A unique user assigned name for an instance of a Fan:Simple:Const Volume. Any reference to this fan by another object will use this name.

Field: Available Schedule

The name of the schedule (ref: Schedule) that denotes whether the fan can run during a given hour. A schedule value greater than 0 (usually 1 is used) indicates that the fan can be on during the hour. A value less than or equal to 0 (usually 0 is used) denotes that the fan must be off for the hour.

Field: Fan Total Efficiency

The ratio of the power delivered to the fluid to the electrical input power. It is the product of the motor efficiency and the fan efficiency. The motor efficiency is the power delivered to the shaft divided by the electrical power input to the motor. The fan efficiency is power delivered to the fluid (air) divided by the shaft power. The power delivered to the fluid is the mass flow rate of the air multiplied by the pressure rise divided by the air density. Must be between 0 and 1.

Field: Delta Pressure

The pressure rise in Pascals at full flow and standard (sea level) conditions (20° C and 101325 Pa).

Field: Max Flow Rate

The full load air volumetric flow rate (m^3/sec) at standard temperature and density (20° C and 1.204kg/m^3). The program does use local barometric pressure to account for altitude using

equation for "standard atmospheric" pressure on p 6.1 of the ASHRAE 1997 HOF (SI edition) to initialize the air systems being simulated.

p=101.325*(1-2.25577E-05*Z)**5.2559

where p=pressure in kPa and Z=altitude in m

Field: Motor Efficiency

The shaft power divided by the electrical power consumed. Must be between 0 and 1.

Field: Motor In Airstream Fraction

The fraction of the motor heat that is added to the air stream. A value of 0 means that the motor is completely outside the air stream. A value of 1 means that all of the motor heat loss will go into the air stream and act to cause a temperature rise. Must be between 0 and 1.

Field: Fan_Inlet_Node

The name of the HVAC system node which supplies the inlet conditions to the fan.

Field: Fan_Outlet_Node

The name of the HVAC system node to which the fan sends its outlet air.

```
FAN:SIMPLE:ConstVolume,
  A1 , \field Fan Name
  A2 , \field Available Schedule
       \type object-list
       \object-list ScheduleNames
  N1 , \field Fan Total Efficiency
       \type real
       \minimum 0.0
       \maximum 1.0
  N2 , \field Delta Pressure
       \units Pa
  N3 , \field Max Flow Rate
       \units m3/sec
  N4 , \field Motor Efficiency
       \type real
       \minimum 0.0
       \maximum 1.0
  N5 , \field Motor In Airstream Fraction
       \ note 0. means fan motor outside air stream, 1.0 means motor in air stream
       \type real
       \minimum 0.0
       \maximum 1.0
  A3 , \field Fan_Inlet_Node
  A4 ; \field Fan_Outlet_Node
```

Simple Constant Volume Fan Outputs

```
HVAC,Average,Fan Electric Power[W]
HVAC,Average,Fan Delta Temp[C]
HVAC,Sum,Fan Electric Consumption[J]
```

Fan:Simple:OnOff

Field: Fan Name

A unique user assigned name for an instance of a Fan:Simple:OnOff. Any reference to this fan by another object will use this name.

Field: Available Schedule

The name of the schedule (ref: Schedule) that denotes whether the fan can run during a given hour. A schedule value greater than 0 (usually 1 is used) indicates that the fan can be on during the hour. A value less than or equal to 0 (usually 0 is used) denotes that the fan must be off for the hour.

Field: Fan Total Efficiency

The ratio of the power delivered to the fluid to the electrical input power. It is the product of the motor efficiency and the fan efficiency. The motor efficiency is the power delivered to the shaft divided by the electrical power input to the motor. The fan efficiency is power delivered to the fluid (air) divided by the shaft power. The power delivered to the fluid is the mass flow rate of the air multiplied by the pressure rise divided by the air density. Must be between 0 and 1.

Field: Delta Pressure

The pressure rise in Pascals at full flow and standard (sea level) conditions (20° C and 101325 Pa).

Field: Max Flow Rate

The full load air volumetric flow rate (m^3/sec) at standard temperature and density (20°C and 1.204kg/m^3). The program does use local barometric pressure to account for altitude using equation for "standard atmospheric" pressure on p 6.1 of the ASHRAE 1997 HOF (SI edition) to initialize the air systems being simulated.

p=101.325*(1-2.25577E-05*Z)**5.2559

where p=pressure in kPa and Z=altitude in m

Field: Motor Efficiency

The shaft power divided by the electrical power consumed. Must be between 0 and 1.

Field: Motor In Airstream Fraction

The fraction of the motor heat that is added to the air stream. A value of 0 means that the motor is completely outside the air stream. A value of 1 means that all of the motor heat loss will go into the air stream and act to cause a temperature rise. Must be between 0 and 1.

Field: Fan_Inlet_Node

The name of the HVAC system node which supplies the inlet conditions to the fan.

Field: Fan_Outlet_Node

The name of the HVAC system node to which the fan sends its outlet air.

Below is the input data dictionary description of the OnOff fan:

```
FAN:SIMPLE:ONOFF,
  A1 , \field Fan Name
  A2 , \field Available Schedule
       \type object-list
       \object-list ScheduleNames
  N1 , \field Fan Total Efficiency
       \type real
       \minimum 0.0
       \maximum 1.0
  N2 , \field Delta Pressure
       \units Pa
  N3 , \field Max Flow Rate
       \units m3/sec
  N4 , \field Motor Efficiency
       \type real
       \minimum 0.0
       \maximum 1.0
  N5 , \field Motor In Airstream Fraction
       \ note 0. means fan motor outside air stream, 1.0 means motor in air stream
       \type real
       \minimum 0.0
       \maximum 1.0
  A3 , \field Fan_Inlet_Node
  A4 ; \field Fan_Outlet_Node
```

Following is an example input for an OnOff Fan.

```
FAN:SIMPLE:OnOff,
      Supply Fan 1,          ! Fan Name
      FanAndCoilAvailSched,  ! Fan Schedule
      0.7,                   ! Fan Efficiency
      600.0,                 ! Delta Pressure [N/M^2]
      1.3,                   ! Max Flow Rate  [m^3/Sec]
      0.9,                   ! Motor Efficiency
      1.0,                   ! Motor in Airstream Fraction (1.0 means motor in air stream)
      Air Loop Inlet Node, Cooling Coil Air Inlet Node;  !Inlet Node, Outlet Node
```

OnOff Fan Outputs

```
HVAC,Average,Fan Electric Power[W]
HVAC,Average,Fan Delta Temp[C]
HVAC,Sum,Fan Electric Consumption[J]
HVAC,Average,On/Off Fan Runtime Fraction
```

Fan:Simple:Variable Volume

Field: Fan Name

A unique user assigned name for an instance of a Fan:Simple:Variable Volume. Any reference to this fan by another object will use this name.

Field: Available Schedule

The name of the schedule (ref: Schedule) that denotes whether the fan can run during a given hour. A schedule value greater than 0 (usually 1 is used) indicates that the fan can be on during the hour. A value less than or equal to 0 (usually 0 is used) denotes that the fan must be off for the hour.

Field: Fan Total Efficiency

The ratio of the power delivered to the fluid to the electrical input power at maximum flow. It is the product of the motor efficiency and the fan efficiency. The motor efficiency is the power delivered to the shaft divided by the electrical power input to the motor. The fan efficiency is power delivered to the fluid (air) divided by the shaft power. The power delivered to the fluid is the mass flow rate of the air multiplied by the pressure rise divided by the air density. Must be between 0 and 1.

Field: Delta Pressure

The pressure rise in Pascals at full flow and standard (sea level) conditions (20° C and 101325 Pa).

Field: Max Flow Rate

The full load air volumetric flow rate (m^3/sec) at standard temperature and pressure (20° C and 101325 Pa).

Field: Min Flow Rate

The minimum air volumetric flow rate (m^3/sec) for the fan at standard temperature and pressure (20° C and 101325 Pa).

Field: Motor Efficiency

The shaft power divided by the electrical power consumed. Must be between 0 and 1.

Field: Motor In Airstream Fraction

The fraction of the motor heat that is added to the air stream. A value of 0 means that the motor is completely outside the air stream. A value of 1 means that all of the motor heat loss will go into the air stream and act to cause a temperature rise. Must be between 0 and 1.

Field: FanCoefficient 1

The constant coefficient (C_1) in a fourth order polynomial curve giving the fraction of full load power (PLF) as a function of flow fraction (FF). Flow fraction is the air mass flow rate divided by the maximum air mass flow rate. The curve is:

$PLF = C_1 + C_2 \cdot FF + C_3 \cdot FF^{2} + C_4 \cdot FF^{3} + C_5 \cdot FF^{4}$

Field: FanCoefficient 2

The linear coefficient (C_2) in a fourth order polynomial curve giving the fraction of full load power (PLF) as a function of flow fraction (FF). Flow fraction is the air mass flow rate divided by the maximum air mass flow rate. The curve is:

$PLF = C_1 + C_2 \cdot FF + C_3 \cdot FF^{2} + C_4 \cdot FF^{3} + C_5 \cdot FF^{4}$

Field: FanCoefficient 3

The quadratic coefficient (C_3) in a fourth order polynomial curve giving the fraction of full load power (PLF) as a function of flow fraction (FF). Flow fraction is the air mass flow rate divided by the maximum air mass flow rate. The curve is:

$PLF = C_1 + C_2 \cdot FF + C_3 \cdot FF^{2} + C_4 \cdot FF^{3} + C_5 \cdot FF^{4}$

Field: FanCoefficient 4

The cubic coefficient (C_1) in a fourth order polynomial curve giving the fraction of full load power (PLF) as a function of flow fraction (FF). Flow fraction is the air mass flow rate divided by the maximum air mass flow rate. The curve is:

$PLF = C_1 + C_2 \cdot FF + C_3 \cdot FF^{2} + C_4 \cdot FF^{3} + C_5 \cdot FF^{4}$

Field: FanCoefficient 5

The coefficient C_5 in a fourth order polynomial curve giving the fraction of full load power (PLF) as a function of flow fraction (FF). Flow fraction is the air mass flow rate divided by the maximum air mass flow rate. The curve is:

$$PLF = C_1 + C_2 \cdot FF + C_3 \cdot FF^{2} + C_4 \cdot FF^{3} + C_5 \cdot FF^{4}$$

Field: Fan_Inlet_Node

The name of the HVAC system node which supplies the inlet conditions to the fan.

Field: Fan_Outlet_Node

The name of the HVAC system node to which the fan sends its outlet air.

```
FAN:SIMPLE:VariableVolume,
  A1 , \field Fan Name
  A2 , \field Available Schedule
       \type object-list
       \object-list ScheduleNames
  N1 , \field Fan Total Efficiency
       \type real
       \minimum 0.0
       \maximum 1.0
  N2 , \field Delta Pressure
       \units Pa
  N3 , \field Max Flow Rate
       \units m3/sec
  N4 , \field Min Flow Rate
       \units m3/sec
  N5 , \field Motor Efficiency
       \type real
       \minimum 0.0
       \maximum 1.0
  N6 , \field Motor In Airstream Fraction
       \ note 0. means fan motor outside air stream, 1.0 means motor in air stream
       \type real
       \minimum 0.0
       \maximum 1.0
  N7 , \field FanCoefficient 1
  N8 , \field FanCoefficient 2
  N9 , \field FanCoefficient 3
  N10, \field FanCoefficient 4
  N11, \field FanCoefficient 5
  A3 , \field Fan_Inlet_Node
  A4 ; \field Fan_Outlet_Node
```

Simple Variable Volume Fan Outputs

```
HVAC,Average,Fan Electric Power[W]
HVAC,Average,Fan Delta Temp[C]
HVAC,Sum,Fan Electric Consumption[J]
```

Zone Exhaust Fan

Field: Exhaust Fan Name

A unique user assigned name for an instance of a Zone Exhaust Fan. Any reference to this fan by another object will use this name.

Field: Available Schedule

The name of the schedule (ref: Schedule) that denotes whether the fan can run during a given hour. A schedule value greater than 0 (usually 1 is used) indicates that the fan can be on during the hour. A value less than or equal to 0 (usually 0 is used) denotes that the fan must be off for the hour

Field: Fan Total Efficiency

The ratio of the power delivered to the fluid to the electrical input power at maximum flow. It is the product of the motor efficiency and the fan efficiency. The motor efficiency is the power delivered to the shaft divided by the electrical power input to the motor. The fan efficiency is power delivered to the fluid (air) divided by the shaft power. The power delivered to the fluid is the mass flow rate of the air multiplied by the pressure rise divided by the air density. Must be between 0 and 1.

Field: Delta Pressure

The pressure rise in Pascals at full flow and standard (sea level) conditions (20° C and 101325 Pa).

Field: Max Flow Rate

The full load air volumetric flow rate (m^3/sec) at standard temperature and pressure (20° C and 101325 Pa).

Field: Fan_Inlet_Node

The name of the HVAC system node which supplies the inlet conditions to the fan.

Field: Fan_Outlet_Node

The name of the HVAC system node to which the fan sends its outlet air.

```
ZONE EXHAUST FAN,
  A1 , \field Exhaust Fan Name
  A2 , \field Available Schedule
       \type object-list
       \object-list ScheduleNames
  N1 , \field Fan Total Efficiency
       \type real
       \minimum 0.0
       \maximum 1.0
  N2 , \field Delta Pressure
       \units Pa
  N3 , \field Max Flow Rate
       \units m3/sec
  A3 , \field Fan_Inlet_Node
  A4 ; \field Fan_Outlet_Node
```

Examples of these statements in an IDF are:

```
FAN:SIMPLE:ConstVolume,
      Supply Fan 1,  !Fan Name
      FanAndCoilAvailSched,        !Fan Schedule
      0.7,           !Fan Efficiency
      600.0,         !Delta Pressure [N/M^2]
      1.3,           !Max Vol Flow Rate  [m^3/Sec]
      0.9,           !motor efficiency
      1.0,           !motor in air stream fraction
      Air Loop Inlet Node, Cooling Coil Air Inlet Node;          !Inlet Node, Outlet Node
```

```
FAN:SIMPLE:VariableVolume,
      Var Vol Supply Fan 1,  !Fan Name
      FanAndCoilAvailSched,     !Fan Schedule
      0.7,           !Fan Efficiency
      600.0,         !Delta Pressure [N/M^2]
      1.3,           !Max Vol Flow Rate  [m^3/Sec]
      0.20,          !Min Vol Flow Rate  [m^3/Sec]
      0.9,           !motor efficiency
      1.0,           !motor in air stream fraction
      0.35071223,    !Fan Coeff 1 This set of Coeff's is for Inlet Vane Dampers
      0.30850535,    !Fan Coeff 2
     -0.54137364,    !Fan Coeff 3
      0.87198823,    !Fan Coeff 4
      0.000,         !Fan Coeff 5
      Air Loop Inlet Node, Cooling Coil Air Inlet Node;          !Inlet Node, Outlet Node
```

```
ZONE EXHAUST FAN, Zone 2 Exhaust Fan,
        FanAndCoilAvailSched,
        0.6,
        125.,
        0.1,
        Zone 2 Exhaust Node, Zone 2 Exhaust Fan Outlet Node;
```

Zone Exhaust Fan Outputs

```
HVAC,Average,Fan Electric Power[W]
HVAC,Average,Fan Delta Temp[C]
HVAC,Sum,Fan Electric Consumption[J]
```

Group – Humidifiers

Humidifier:Steam:Electrical

The electrical steam humidifier is a component that represents an electrically heated, self contained steam humidifier. The component uses electrical energy to convert ordinary tap water to steam which it then injects into the supply air stream by means of a blower fan. The actual unit might be an electrode-type humidifier or a resistance-type humidifier.

Field: Name of humidifier unit

A unique user assigned name for a particular humidifier unit. Any reference to this unit by another object will use this name.

Field: Unit availability schedule

The name of the schedule (ref: Schedule) that denotes whether the unit can run during a given hour. A schedule value greater than 0 (usually 1 is used) indicates that the unit can be on during the hour. A value less than or equal to 0 (usually 0 is used) denotes that the unit must be off for the hour.

Field: Rated capacity

The nominal full output water addition rate of the unit in m^3/sec of steam.

Field: Rated power

The nominal full output power consumption of the unit in watts, exclusive of the blower fan power consumption and any standby power.

Field: Rated fan power

The nominal full output power consumption of the blower fan in watts.

Field: Standby power

The standby power consumption in watts. This amount of power will be consumed whenever the unit is available (as defined by the availability schedule)..

Field: Air inlet node

The name of the HVAC system node from which the unit draws inlet air.

Field: Air outlet node

The name of the HVAC system node to which the unit sends its outlet air

The full IDD specification follows:

```
HUMIDIFIER:STEAM:ELECTRICAL,
  A1, \field Name
  A2, \field Available Schedule
       \type object-list
       \object-list ScheduleNames
  N1, \field rated capacity
      \type real
      \units m3/s
      \minimum 0.0
  N2, \field rated power
      \type real
      \units watts
      \minimum 0.0
  N3, \field rated fan power
      \type real
      \units watts
      \minimum 0.0
  N4, \field Standby power
      \type real
      \units watts
      \minimum 0.0
  A3, \field air inlet node
      \type alpha
  A4; \field air outlet node
      \type alpha
```

An IDF example:

```
HUMIDIFIER:STEAM:ELECTRICAL,
      Humidifier 1,          ! name
      FanAndCoilAvailSched,  ! availability schedule
      0.00000379,            ! nominal capacity in m3/s
      10200.,                ! rated power in watts
      27.,                   ! fan power in watts
      2.,                    ! standby power
      Cooling Coil Air Outlet Node, ! air inlet node
      Air Loop Outlet Node;         ! air outlet node
```

Humidfier:Steam:Electrical Outputs

```
HVAC,Average,Humidifier Water Consumption Rate[m3/s]
HVAC,Sum,Humidifier Water Consumption[m3]
HVAC,Average,Humidifier Electric Power[W]
HVAC,Sum,Humidifier Electric Consumption[J]
Zone,Meter,Humidifier:Water [m3]
Zone,Meter,Humidifier:Electricity [J]
```

Field: Humidifier Water Consumption Rate[m3/s]

This field reports the water consumption rate of the steam humidifier in cubic meters of water per second.

Field: Humidifier Water Consumption[m3]

This ouput is the cubic meters of water consumed by the steam humidifier over the timestep being reported.

Field: Humidifier Electric Power[W]

This output is the electricity consumption rate in Watts of the steam humidifier.

Field: Humidifier Electric Consumption[J]

This is the electricity consumption in Joules of the steam humidifier over the time step being reported.

Field: Humidifier:Water [m3]

This meter output contains the sum of the water consumed (in cubic neters of water during the report time step) by all the steam humidifiers at the HVAC level in the simulation.

Field Humidifier:Electricity [J]

This meter output contains the sum of the electricity consumed (in Joules during the report time step) by all the steam humidifiers at the HVAC level in the simulation.

Group – Desiccant Dehumidifiers

Desiccant Dehumidifier:Solid

This object models a solid desiccant dehumidifier. The process air stream is the air which is dehumidified. The regen air stream is the air which is heated to regenerate the desiccant. This object determines the process air outlet conditions, the load on the regen heating coil, the electric power consumption for the wheel rotor motor, and the regen air fan mass flow rate. All other heat exchangers are modeled as separate objects connected to the inlet and outlet nodes of the dehumidifier. The solid desiccant dehumidifier is typically used in an OUTSIDE AIR SYSTEM, but can also be specified in any AIR LOOP.

Field: Name

This alpha field contains the identifying name for the desiccant dehumidifier.

Field: Availability Schedule

The name of the schedule (ref: Schedule) that denotes whether the desiccant unit can run during a given hour. A schedule value greater than 0 (usually 1 is used) indicates that the unit can be on during the hour. A value less than or equal to 0 (usually 0 is used) denotes that the unit must be off for the hour.

Field: Process Air inlet node

The name of the node entering the process side of the desiccant wheel.

Field: Process Air outlet node

The name of the node leaving the process side of the desiccant wheel.

Field: Regen Air inlet node

The name of the node entering the regen side of the desiccant wheel after the regen coil.

Field: Regen Fan Inlet Node

Node name for air entering the regen fan, mass flow is set by the desiccant dehumidifier module.

Field: Control Type

Type of setpoint control. Currently only one type is implemented: LEAVING HUMRAT:BYPASS means that the unit is controlled to deliver air at the *Leaving Max Humidity Ratio Setpoint*, using bypass dampers to prevent overdrying.

Field: Leaving Max Humidity Ratio Setpoint

Fixed setpoint for maximum process air leaving humidity ratio. Applicable only when Control Type = LEAVING HUMRAT:BYPASS.

Field: Nominal Process Air Flow Rate

Process air flow rate in m^3/s at nominal conditions

Field: Nominal Process Air Velocity

Process air velocity in m/s at nominal flow

Field: Nominal Regen Air Flow Rate

Regeneration air flow rate in m^3/s.

Field: Nominal Process Air Entering Dry Bulb

Process air entering dry bulb at nominal conditions in degrees C.

Field: Nominal Process Air Entering Humidity Ratio

Process air entering humidity ratio at nominal conditions in kg_{Water}/kg_{Air}.

Field: Nominal water removal capacity

Water removal rate in kg/m^3 from process air stream at nominal conditions per unit of process air flow

Field: Nominal regen energy

Regeneration heat required in J per kg of water removed at nominal conditions.

Field: Rotor power

Power input to wheel rotor motor in W.

Field: Regen coil name

Name of heating coil object for regeneration air.

Field: Regen Fan Name

Name of fan object for regeneration air.

Field: Performance Model

Specifies whether the default performance model or user-specified curves should be used to model the performance. The default model is a generic solid desiccant wheel using performance curves of the form:

```
curve = C1 + C2*edb + C3*edb**2 + C4*ew + C5*ew**2 +
    C6*vel + C7*vel**2 + C8*edb*ew + C9*edb**2*ew**2 +
    C10*edb*vel + C11*edb**2*vel**2 + C12*ew*vel + C13*ew**2*vel**2 +
    C14*ALOG(edb) + C15*ALOG(ew) + C16*ALOG(vel)

    edb = process entering drybulb temperature [C]
    ew  = process entering humidity ratio [kg/kg]
    vel = process air velocity [m/s]
```

If USER CURVES are specified, then performance is calculated as follows:

Leaving Dry Bulb = (Leaving Dry Bulb fTW Curve) * (Leaving Dry Bulb fV Curve)

Leaving Humidity Ratio = (Leaving Humidity Ratio fTW Curve) * (Leaving Humidity Ratio fV Curve)

Regen Energy = (Regen Energy fTW Curve) * (Regen Energy fV Curve)

Regen Velocity = (Regen Velocity fTW Curve) * (Regen Velocity fV Curve)

Field: Leaving Dry Bulb fTW Curve

Leaving dry bulb of process air as a function of entering dry bulb and entering humidity ratio, biquadratic curve.

```
curve = C1 + C2*edb + C3*edb**2 + C4*ew + C5*ew**2 + C6*edb*ew

    edb = process entering drybulb temperature [C]
    ew  = process entering humidity ratio [kg/kg]
```

Field: Leaving Dry Bulb fV Curve

Leaving dry bulb of process air as a function of air velocity, quadratic curve.

```
curve = C1 + C2*v + C3*v**2

    v = process air velocity [m/s]
```

Field: Leaving Humidity Ratio fTW Curve

Leaving humidity ratio of process air as a function of entering dry bulb and entering humidity ratio, biquadratic curve

curve = C1 + C2*edb + C3*edb**2 + C4*ew + C5*ew**2 + C6*edb*ew

edb = process entering drybulb temperature [C]
ew = process entering humidity ratio [kg/kg]

Field: Leaving Humidity Ratio fV Curve

Leaving humidity ratio of process air as a function of process air velocity, quadratic curve.

curve = C1 + C2*v + C3*v**2

v = process air velocity [m/s]

Field: Regen Energy fTW Curve

Regeneration energy [W/kg of water removed] as a function of entering dry bulb and entering humidity ratio, biquadratic curve

curve = C1 + C2*edb + C3*edb**2 + C4*ew + C5*ew**2 + C6*edb*ew

edb = process entering drybulb temperature [C]
ew = process entering humidity ratio [kg/kg]

Field: Regen Energy fV Curve

Regeneration energy [W/kg of water removed] as a function of processair velocity, quadratic curve.

curve = C1 + C2*v + C3*v**2

v = process air velocity [m/s]

Field: Regen Velocity fTW Curve

Regeneration velocity [m/s] as a function of entering dry bulb and entering humidity ratio, biquadratic curve

curve = C1 + C2*edb + C3*edb**2 + C4*ew + C5*ew**2 + C6*edb*ew

edb = process entering drybulb temperature [C]
ew = process entering humidity ratio [kg/kg]

Field: Regen Velocity fV Curve

Regeneration velocity [m/s] as a function of process air velocity, quadratic curve.

curve = C1 + C2*v + C3*v**2

v = process air velocity [m/s]

Field: Nominal Regen Temperature

Nominal regen temperature upon which the regen energy modifier curve is based

```
DESICCANT DEHUMIDIFIER:SOLID,
      \memo This object models a solid desiccant dehumidifier. The process
      \memo air stream is the air which is dehumidified. The regen air
      \memo stream is the air which is heated to regenerate the desiccant.
      \memo This object determines the process air outlet conditions, the
      \memo load on the regen heating coil, the electric power consumption
      \memo for the wheel rotor motor, and the regen air fan mass flow rate.
      \memo All other heat exchangers are modeled as separate objects connected
      \memo to the inlet and outlet nodes of the dehumidifier. The solid
      \memo desiccant dehumidifier is typically used in an OUTSIDE AIR SYSTEM,
      \memo but can also be specified in any AIR LOOP.
  A1, \field Name
  A2, \field Availability Schedule
      \type object-list
      \object-list ScheduleNames
  A3, \field Process Air Inlet Node
      \note This is the node entering the process side of the desiccant wheel.
      \type alpha
  A4, \field Process Air Outlet Node
      \note This is the node leaving the process side of the desiccant wheel.
      \type alpha
  A5, \field Regen Air Inlet Node
      \note This is the node entering the regen side of the desiccant wheel
      \note after the regen coil.
      \type alpha
  A6, \field Regen Fan Inlet Node
      \note Node for air entering the regen fan, mass flow is set
      \note by the desiccant dehumidifier module.
      \type alpha
  A7, \field Control Type
      \note Type of setpoint control
      \note Currently only one type is implemented:
      \note LEAVING HUMRAT:BYPASS means that the unit is controlled
      \note to deliver air at the Leaving Max Humidity Ratio Setpoint,
      \note using bypass dampers to prevent overdrying.
      \type choice
      \key LEAVING HUMRAT:BYPASS
  N1, \field Leaving Max Humidity Ratio Setpoint
      \note Fixed setpoint for maximum process air leaving humidity ratio
      \note Applicable only when Control Type = LEAVING HUMRAT:BYPASS.
      \type real
```

```
  N2, \field Nominal Process Air Flow Rate
      \note Process air flow rate at nominal conditions
      \type real
      \units m3/s
      \minimum> 0.0
  N3, \field Nominal Process Air Velocity
      \note Process air velocity at nominal flow
      \type real
      \units m/s
      \minimum> 0.0
  N4, \field Nominal Regen Air Flow Rate
      \note Regeneration air flow rate
      \type real
      \units m3/s
      \minimum> 0.0
  N5, \field Nominal Process Air Entering Dry Bulb
      \note Process air entering dry bulb at nominal conditions
      \type real
      \units C
      \minimum -99
      \maximum 99
  N6, \field Nominal Process Air Entering Humidity Ratio
      \note Process air entering humidity ratio at nominal conditions
      \type real
      \units kgWater/kgAir
      \minimum> 0.0
  N7, \field Nominal Water Removal Capacity
      \note Water removal rate from process air stream at nominal conditions per
      \note unit of process air flow
      \type real
      \units kg/m3
      \minimum> 0.0
  N8, \field Nominal Regen Energy
      \note Regeneration heat required per kg of water removed at nominal conditions
      \type real
      \units J/kg
      \minimum> 0.0
  N9, \field Rotor Power
      \note Power input to wheel rotor motor
      \type real
      \units W
      \minimum 0.0
  A8, \field Regen Coil Name
      \note Name of heating coil object for regeneration air
      \type object-list
      \object-list HeatingCoilName
  A9, \field Regen Fan Name
      \note Name of fan object for regeneration air
      !\type object-list
      \object-list FanName
 A10, \field Performance Model
      \note Specifies whether the default performance model or user-specified
      \note curves should be used to model the performance.  The default model
      \note is a generic solid desiccant wheel using performance curves of the form:
      \note curve = C1 + C2*edb + C3*edb**2 + C4*ew + C5*ew**2 + C6*vel + C7*vel**2
      \note + C8*edb*ew + C9*edb**2*ew**2 + C10*edb*vel + C11*edb**2*vel**2
      \note + C12*ew*vel + C13*ew**2*vel**2 + C14*ALOG(edb) + C15*ALOG(ew) + C16*ALOG(vel)
      \note   edb = process entering drybulb temperature [C]
      \note   ew  = process entering humidity ratio [kg/kg]
      \note   vel = process air velocity [m/s]
      \note If USER CURVES are specified, then performance is calculated as follows:
      \note   Leaving Dry Bulb = (Leaving Dry Bulb fTW Curve) * (Leaving Dry Bulb fV Curve)
      \note   Leaving Humidity Ratio = (Leaving Humidity Ratio fTW Curve)*(Leaving Humidity Ratio fV
Curve)
      \note   Regen Energy = (Regen Energy fTW Curve) * (Regen Energy fV Curve)
      \note   Regen Velocity = (Regen Velocity fTW Curve) * (Regen Velocity fV Curve)
      \type choice
      \key DEFAULT
      \key USER CURVES
```

```
A11, \field Leaving Dry Bulb fTW Curve
     \note Leaving dry bulb of process air as a function of entering dry bulb
     \note and entering humidity ratio, biquadratic curve
     \type object-list
     \object-list BiquadraticCurves
     \note curve = C1 + C2*edb + C3*edb**2 + C4*ew + C5*ew**2 + C6*edb*ew
     \note edb = process entering drybulb temperature [C]
     \note ew  = process entering humidity ratio [kg/kg]
A12, \field Leaving Dry Bulb fV Curve
     \note Leaving dry bulb of process air as a function of air velocity,
     \note quadratic curve.
     \type object-list
     \object-list QuadraticCurves
     \note curve = C1 + C2*v + C3*v**2
     \note v = process air velocity [m/s]
A13, \field Leaving Humidity Ratio fTW Curve
     \note Leaving humidity ratio of process air as a function of entering dry bulb
     \note and entering humidity ratio, biquadratic curve
     \type object-list
     \object-list BiquadraticCurves
     \note curve = C1 + C2*edb + C3*edb**2 + C4*ew + C5*ew**2 + C6*edb*ew
     \note edb = process entering drybulb temperature [C]
     \note ew  = process entering humidity ratio [kg/kg]
A14, \field Leaving Humidity Ratio fV Curve
     \note Leaving humidity ratio of process air as a function of
     \note process air velocity, quadratic curve.
     \type object-list
     \object-list QuadraticCurves
     \note curve = C1 + C2*v + C3*v**2
     \note v = process air velocity [m/s]
A15, \field Regen Energy fTW Curve
     \note Regeneration energy [W/kg of water removed] as a function of
     \note entering dry bulb and entering humidity ratio, biquadratic curve
     \type object-list
     \object-list BiquadraticCurves
     \note curve = C1 + C2*edb + C3*edb**2 + C4*ew + C5*ew**2 + C6*edb*ew
     \note edb = process entering drybulb temperature [C]
     \note ew  = process entering humidity ratio [kg/kg]
A16, \field Regen Energy fV Curve
     \note Regeneration energy [W/kg of water removed] as a function of
     \note processair velocity, quadratic curve.
     \type object-list
     \object-list QuadraticCurves
     \note curve = C1 + C2*v + C3*v**2
     \note v = process air velocity [m/s]
A17, \field Regen Velocity fTW Curve
     \note Regeneration velocity [m/s] as a function of
     \note entering dry bulb and entering humidity ratio, biquadratic curve
     \type object-list
     \object-list BiquadraticCurves
     \note curve = C1 + C2*edb + C3*edb**2 + C4*ew + C5*ew**2 + C6*edb*ew
     \note edb = process entering drybulb temperature [C]
     \note ew  = process entering humidity ratio [kg/kg]
A18, \field Regen Velocity fV Curve
     \note Regeneration velocity [m/s] as a function of
     \note process air velocity, quadratic curve.
     \type object-list
     \object-list QuadraticCurves
     \note curve = C1 + C2*v + C3*v**2
     \note v = process air velocity [m/s]
N10; \field Nominal Regen Temperature
     \note Nominal regen temperature upon which the
     \note regen energy modifier curve is based
     \type real
     \units C
     \minimum 40
     \maximum 250
     \default 121
```

An example of this statement in an IDF is:

```
DESICCANT DEHUMIDIFIER:SOLID,
    Desiccant 1,             !- Name
    FanAndCoilAvailSched,    !- Availability Schedule
    Mixed Air Node,          !- Process Air Inlet Node
    Desiccant Process Outlet Node,
                             !- Process Air Outlet Node
    Regen Coil Out Node,     !- Regen Air Inlet Node
    Outside Air Inlet Node 2,!- Regen Fan Inlet Node
    LEAVING HUMRAT:BYPASS,   !- Control Type
    0,                       !- Leaving Max Humidity Ratio Setpoint
    0.007,                   !- Nominal Process Air Flow Rate {m3/s}
    1,                       !- Nominal Process Air Velocity {m/s}
    3.556,                   !- Nominal Regen Air Flow Rate {m3/s}
    1,                       !- Nominal Process Air Entering Dry Bulb {C}
    1,                       !- Nominal Process Air Entering Humidity Ratio {kgWater/kgAir}
    1,                       !- Nominal Water Removal Capacity {kg/m3}
    1,                       !- Nominal Regen Energy {J/kg}
    1,                       !- Rotor Power {W}
    0,                       !- Regen Coil Name
    Desiccant Regen Coil,    !- Regen Fan Name
    Desiccant Regen Fan,     !- Performance Model
    !     DEFAULT,           !- Leaving Dry Bulb fTW Curve
    USER CURVES,             !- Leaving Dry Bulb fV Curve
    Desiccant DryBulb fTW Curve,
                             !- Leaving Humidity Ratio fTW Curve
    Desiccant DryBulb fV Curve,
                             !- Leaving Humidity Ratio fV Curve
    Desiccant HumRat fTW Curve,
                             !- Regen Energy fTW Curve
    Desiccant HumRat fV Curve,
                             !- Regen Energy fV Curve
    Desiccant RegenEnergy fTW Curve,
                             !- Regen Velocity fTW Curve
    Desiccant RegenEnergy fV Curve,
                             !- Regen Velocity fV Curve
    121;                     !- Nominal Regen Temperature {C}
```

Solid Desiccant Dehumidifier

```
HVAC,Sum,Desiccant Dehumidifier Water Removed [kg]
HVAC,Average,Desiccant Dehumidifier Water Removal Rate[kg/s]
HVAC,Average,Desiccant Dehumidifier Part Load Ratio[]
HVAC,Average,Desiccant Dehumidifier Elec Use Rate[W]
HVAC,Sum,Desiccant Dehumidifier Elec Use Energy[J]
HVAC,Average,Desiccant Dehumidifier Specific Regen Energy [W/kg H2O]
HVAC,Average,Desiccant Dehumidifier Regen Energy Rate[W]
HVAC,Sum,Desiccant Dehumidifier Regen Energy[J]
HVAC,Average,Desiccant Dehumidifier Regen Air Velocity[m/s]
HVAC,Average,Desiccant Dehumidifier Regen Air Mass Flow Rate[kg/s]
HVAC,Average,Desiccant Dehumidifier Process Air Mass Flow Rate[kg/s]
```

Group – Air Distribution Units

The systems described in the Air Distribution Units (ADU's) are shown below. These single description ADU's contain the reference to the components and the actual controls in one block of input. The idea is that the control volume is drawn tightly around the controls and loosely around the components. This allows complex interactions to take place between all of the components that respond to the Zone Thermostatic Control output. The coils that are referenced in the ADU's are explained fully in the "Coils" section of this manual.

Dual Duct:Const Volume

The Dual Duct Constant Volume simulation or the typical Multizone is described by this Air Distribution Unit (ADU). Multizone systems condition all the air in a central apparatus and distribute it to the conditioned zones through two parallel ducts. One duct carries cold air and the other warm air, providing air sources for both heating and cooling at all times. In each conditioned zone, a mixing valve responsive to a room thermostat mixes the warm and cold air in proper proportions to satisfy the prevailing heating or cooling load of the space. The Multizone ADU is the specific component that leads to the zone containing the mixer and the mixing damper and then connecting to the zone. The total airflow to each room is kept constant while the proportion of hot air to cold air is adjusted to maintain the temperature in each zone at the desired level.

Field: Name

Unique name for the Multizone ADU.

Field: Availability Schedule

Schedule that this component will operate or is available to operate.

Field: Unit Air Outlet Node

The outlet node from the ADU to the zone.

Field: Unit Hot Air Inlet Node

The air-inlet node name that connects the hot air splitter to the individual zone ADU.

Field: Unit Cold Air Inlet Node

The air-inlet node name that connects the cold air splitter to the individual zone ADU.

Field: Max Air Flow Rate

The design constant volume flow rate (m^3/sec) specified for that Multizone ADU.

The IDD specification is:

```
DUAL DUCT:CONST VOLUME,
  A1 , \field Name
        \required-field
  A2 , \field Availability Schedule
        \required-field
       \type object-list
       \object-list ScheduleNames
  A3 , \field Unit Air Outlet Node
        \required-field
  A4 , \field Unit Hot Air Inlet Node
        \required-field
  A5 , \field Unit Cold Air Inlet Node
        \required-field
  N1 ; \field Max Air Flow Rate
        \required-field
       \units m3/s
       \Minimum 0.0
       \autosizable
```

An IDF example:

```
DUAL DUCT:CONST VOLUME,
    Zone2MixDamp,  !- Name
    FanAndCoilAvailSched,  !- Availability Schedule
    Zone 2 Dual Duct Outlet,  !- Unit Air Outlet Node
    Zone 2 Dual Duct Hot Inlet,  !- Unit Hot Air Inlet Node
    Zone 2 Dual Duct Cold Inlet,  !- Unit Cold Air Inlet Node
    0.36;  !- Max Air Flow Rate {m3/s}
```

Dual Duct:VAV

Dual duct variable air volume (DDVAV) systems are used to obtain zone temperature control by mixing the cold and warm air in various volume combinations. The fan is sized for the anticipated maximum coincident hot or cold volume, not the sum of the instantaneous peaks. This system has an advantage of a true single path VAV system, except for warm port leakage. When cold air is modulated for control before mixing, it operates similar to the VAV induction when mixing occurs without hot deck reheat. It is similar to a reheat system when mixing occurs while the hot deck is using the reheat coil. It uses more energy than a true VAV system, but less than a constant volume dual duct system.

Field: Name

Unique name for the Dual Duct VAV Air Distribution Unit (ADU).

Field: Availability Schedule

Schedule that this component will operate or is available to operate.

Field: Unit Air Outlet Node

The outlet node from the ADU to the zone.

Field: Unit Hot Air Inlet Node

The air-inlet node name that connects the hot air splitter to the individual zone ADU.

Field: Unit Cold Air Inlet Node

The air-inlet node name that connects the cold air splitter to the individual zone ADU.

Field: Max Damper Air Flow Rate

The design maximum volume flow rate (m^3/sec) specified for DDVAV ADU.

Field: Zone Minimum Air Flow Fraction

The minimum flow rate to the zone while the system is operating, specified as a fraction of the Max Damper Air Flow Rate. The minimum zone fraction is normally specified to meet the minimum ventilation requirement for the occupants.

The IDD specification is:

```
DUAL DUCT:VAV,
  A1 , \field Name
        \required-field
  A2 , \field Availability Schedule
        \required-field
       \type object-list
       \object-list ScheduleNames
  A3 , \field Unit Air Outlet Node
        \required-field
  A4 , \field Unit Hot Air Inlet Node
        \required-field
  A5 , \field Unit Cold Air Inlet Node
        \required-field
  N1 , \field Max Damper Air Flow Rate
        \required-field
       \units m3/s
       \Minimum 0.0
       \autosizable
  N2 ; \field Zone Minimum Air Flow Fraction
        \required-field
       \note fraction of Max air flow
       \Maximum 1.0
       \Minimum 0.0
       \Default 0.2
```

An IDF example:

```
DUAL DUCT:VAV,
    Zone1MixDamp,  !- Name
    FanAndCoilAvailSched,  !- Availability Schedule
    Zone 1 Dual Duct Outlet,  !- Unit Air Outlet Node
    Zone 1 Dual Duct Hot Inlet,  !- Unit Hot Air Inlet Node
    Zone 1 Dual Duct Cold Inlet,  !- Unit Cold Air Inlet Node
    0.47,  !- Max Damper Air Flow Rate {m3/s}
    0.3;  !- Zone Minimum Air Flow Fraction
```

Single Duct:Const Volume:Reheat

The Single Duct Constant Volume or terminal reheat system is a constant volume reheat system. The systems cooling capabilities are provided by way of cooling coil that supplies cooling to the entire supply air volume. The cooling coil is controlled by a controller setpoint specified for the cooling coil. Zone control is accomplished by heating (reheating) the airflow into each zone as determined by the zone thermostat. Currently the reheat can be supplied by a electric, gas, or hot water coil that tries to meet the zone demand.

Field: Name of System

Unique name for the terminal reheat Air Distribution Unit (ADU).

Field: Availability schedule for System

Schedule that this component will operate or is available to operate.

Field: Unit Air Outlet Node

The outlet node from the ADU to the zone. This is the same node as the reheat component air outlet node.

Field: Unit Air Inlet Node

The air-inlet node name that connects the air splitter to the individual zone ADU. This is the same node as the reheat component air inlet node.

Field: Maximum air flow rate

The design constant volume flow rate (m^3/sec) specified for the terminal reheat ADU.

Field: Control node

The last several fields for this terminal reheat component describe the type of reheat coil that is being used and how it is controlled. Most of the fields pertain to the hot water coil since the gas and electric coil are much more simplified.

For the hot water reheat coil there is a node on the water side that would control the flow to the coil capacity to allow the coil to meet the zone demand. This control location is the name of the control node for the terminal reheat ADU. For the gas and electric coil this is left blank.

Field: Reheat Component Object

The 3 possible reheat component objects currently available are:

```
COIL:Water:SimpleHeating
COIL:Gas:Heating
COIL:Electric:Heating
```

Field: Name of Reheat Component

Unique coil name being simulated with this ADU. Applicable for all coils.

Field: Max Reheat Water Flow

This field is 0 for gas and electric coils. Set to the maximum design water flow (m^3/sec) for the hot water coil

Field: Min Reheat Water Flow

This field is zero for gas and electric coils. Set to the minimum design water flow (m^3/sec) for the hot water coil, normally set to be a shut off valve that is set to zero.

Field: Convergence Tolerance

The coil is controlled by knowing the zone demand determined by the zone thermostat and setting the outlet conditions to meet this demand. For the electric and gas coils, this is set exactly since the coil model solution can be inverted. With the hot water coil that uses an effectiveness-NTU method, the solution cannot be inverted directly. Therefore, to determine the correct mass flow rate for the hot water the solution is solved for by iteration. The iterative solution uses an interval halving routine and needs a termination criteria that is set with the Convergence Tolerance parameter. This control offset is set to a decimal fraction of the zone demand as the criteria, i.e. 0.001. The default for the field is 0.001.

The IDD specification is:

```
SINGLE DUCT:CONST VOLUME:REHEAT,
  A1,     \field Name of System
        \required-field
  A2,     \field Availability schedule for VAV System
        \required-field
          \type object-list
          \object-list ScheduleNames
  A3,     \field Unit Air Outlet Node
        \required-field
  A4,     \field Unit Air Inlet Node
        \required-field
  N1,     \field Maximum air flow rate
          \units m3/s
          \Minimum 0.0
          \autosizable
  A5,     \field Control node
  A6,     \field Reheat Component Object
  A7,     \field Name of Reheat Component
  N2,     \field Max Reheat Water Flow
          \units m3/s
          \Minimum 0.0
          \autosizable
  N3,     \field Min Reheat Water Flow
          \units m3/s
          \Minimum 0.0
          \default 0.0
  N4;     \field Convergence Tolerance
          \type real
          \Minimum> 0.0
```

An IDF example:

```
SINGLE DUCT:CONST VOLUME:REHEAT,
    Reheat Zone 1,  !- Name of System
    FanAndCoilAvailSched,  !- Availability schedule for VAV System
    Zone 1 Reheat Air Outlet Node,  !- Unit Air Outlet Node
    Zone 1 Reheat Air Inlet Node,  !- Unit Air Inlet Node
    0.59,  !- Maximum air flow rate {m3/s}
    ,  !- Control node
    COIL:Gas:Heating,  !- Reheat Component Object
    Reheat Coil Zone 1,  !- Name of Reheat Component
    0.0,  !- Max Reheat Water Flow {m3/s}
    0.0,  !- Min Reheat Water Flow {m3/s}
    0.001;  !- Convergence Tolerance
```

Single Duct:VAV:Reheat

Variable air volume (VAV) systems control the dry bulb temperature inside a zone by varying the supply air volume instead of the air temperature. At full cooling the VAV damper is fully open supplying the specified maximum air flow rate. As the cooling load decreases, the damper closes until it reaches the minimum stop specified by the zone minimum air flow fraction. The system can be specified with reheat (default) or by judicious use of certain parameters (see following discussion) can be specified without reheat.

VAV systems can be used for interior or perimeter zones with a common fan system, air temperature control, and reheating devices. The VAV concept may vary according to the VAV box locations, air temperature controls and types of heating elements. Heating can usually be provided by use of reheat coils or thermostatic baseboard.

Field: Name of System

Unique name for the VAV Air Distribution Unit (ADU).

Field: Availability schedule for VAV System

Schedule that this component will operate or is available to operate.

Field: Damper Air Outlet Node

The VAV damper outlet node. If there is a reheat coil, this must be the same as the air inlet node of the reheat component. If there is no reheat coil, this node name must be the same as the Unit Air Outlet Node name.

Field: Unit Air Inlet Node

The air nlet node name that connects the air splitter to the individual zone ADU. This is *not* the same as the air inlet node of the reheat component: it is upstream of that node.

Field: Maximum air flow rate

The design maximum volume flow rate (m^3/sec) specified for VAV ADU.

Field: Zone Minimum Air Flow Fraction

The minimum flow rate to the zone while the system is operating, specified as a fraction of the maximum air flow rate. The minimum zone fraction is normally specified to meet the minimum ventilation requirement for the occupants. The reheat coil operates only when the damper is at this minimum flow rate when Damper Heating Action is set to NORMAL (the default).

Field: Control node

The last several fields for this terminal reheat component describe the type of reheat coil that is being used and how it is controlled. Most of the fields pertain to the hot water coil since the gas and electric coil are much more simplified.

For the hot water reheat coil there is a node on the water side that would control the flow to the coil capacity to allow the coil to meet the zone demand. This control location is the name of the control node for the terminal reheat ADU. For the gas and electric coils, or if there is no reheat coil, this is left blank.

Field: Reheat Component Object

The 3 possible reheat component objects currently available are:

```
COIL:Water:SimpleHeating
COIL:Gas:Heating
COIL:Electric:Heating
```

If there is no reheat coil, this is left blank.

Field: Name of Reheat Component

Unique coil name being simulated with this ADU. Applicable for all coils. If there is no reheat coil, this is left blank.

Field: Max Reheat Water Flow

This field is 0 for gas and electric coils. Set to the maximum design water flow (m^3/sec) for the hot water coil. If there is no reheat coil, this is left blank.

Field: Min Reheat Water Flow

This field is zero for gas and electric coils. Set to the minimum design water flow (m^3/sec) for the hot water coil, normally set to be a shut off valve that is set to zero. If there is no reheat coil, this is left blank.

Field: Unit Air Outlet Node

This is the air outlet node for the ADU and is then connected to the zone. If there is a reheat coil, this is the same node as the air outlet node of the reheat component. If there is no reheat coil, this node name must be the same as the Damper Air Outlet Node name.

Field: Convergence Tolerance

The coil is controlled by knowing the zone demand determined by the zone thermostat and setting the outlet conditions to meet this demand. For the electric and gas coils, this is set exactly since the coil model solution can be inverted. With the hot water coil that uses an effectiveness-NTU method, the solution cannot be inverted directly. Therefore, to determine the correct mass flow rate for the hot water the solution is solved for by iteration. The iterative solution uses an interval halving routine and needs a termination criteria that is set with the Convergence Tolerance parameter. This control offset is set to a decimal fraction of the zone demand as the criteria, i.e. 0.001. The default for the field is 0.001.

Field: Damper Heating Action

During heating operation, there are two control options for the damper controlling the air flow in the VAV terminal unit as the zone moves above or below the zone setpoint. With both control options, the damper is at the minimum air flow rate whenever the zone temperature is between the cooling and heating setpoints.

With **NORMAL** (the default) action, the damper will remain at the minimum air flow rate during heating operation. As the heating load increases, the water flow rate in the reheat coil will be increased to maintain temperature in the zone until the maximum water flow rate is reached.

With **REVERSE ACTION**, as the heating load increases, the unit starts at minimum air flow and minimum hot water flow. The hot water flow is increased until it reaches maximum flow, then the air damper starts to open to meet the load. This option is used if the minimum air flow rate is not adequate to serve the peak heating load.

The IDD specification is:

```
SINGLE DUCT:VAV:REHEAT,
  A1,     \field Name of System
        \required-field
  A2,     \field Availability schedule for VAV System
        \required-field
          \type object-list
          \object-list ScheduleNames
  A3,     \field Reheat Component Air Inlet Node
        \required-field
  A4,     \field Unit Air Inlet Node
        \required-field
  N1,     \field Maximum air flow rate
          \units m3/s
          \Minimum 0.0
          \autosizable
  N2,     \field Zone Minimum Air Flow Fraction
          \required-field
          \note fraction of Max air flow
  A5,     \field Control node
  A6,     \field Reheat Component Object
  A7,     \field Name of Reheat Component
  N3,     \field Max Reheat Water Flow
          \units m3/s
          \Minimum 0.0
          \autosizable
  N4,     \field Min Reheat Water Flow
          \units m3/s
          \Minimum 0.0
          \Default 0.0
  A8,     \field Unit Air Outlet Node
  N5,     \field Convergence Tolerance
          \type real
          \minimum> 0.0
          \default 0.001
  A9;     \field Damper Heating Action
          \type choice
          \key NORMAL
          \key REVERSE ACTION
          \default NORMAL
```

An IDF example:

```
SINGLE DUCT:VAV:REHEAT,
    SPACE2-1 VAV Reheat,  !- Name of System
    ReheatCoilAvailSched,  !- Availability schedule for VAV System
    SPACE2-1 Zone Coil Air In Node,  !- Damper Air Outlet Node
    SPACE2-1 ATU In Node,  !- Unit Air Inlet Node
    autosize,  !- Maximum air flow rate {m3/s}
    0.3,  !- Min air flow
    ,  !- Control node
    COIL:Gas:Heating,  !- Reheat Component Object
    SPACE2-1 Zone Coil,  !- Name of Reheat Component
    0.0,  !- Max Reheat Water Flow {m3/s}
    0.0,  !- Min Reheat Water Flow {m3/s}
    SPACE2-1 In Node,  !- Unit Air Outlet Node
    0.001,  !- Convergence Tolerance
    REVERSE ACTION;  !- Damper Heating Action

COIL:Gas:Heating,
    SPACE2-1 Zone Coil,  !- Coil Name
    ReheatCoilAvailSched,  !- Available Schedule
    0.8,  !- Gas Burner Efficiency of the Coil
    autosize,  !- Nominal Capacity of the Coil {W}
    SPACE2-1 Zone Coil Air In Node,  !- Coil_Air_Inlet_Node
    SPACE2-1 In Node;  !- Coil_Air_Outlet_Node
```

Single Duct:Series PIU:Reheat

The series powered induction unit is an air system terminal unit that mixes varying amounts of secondary (recirculated) air and primary (conditioned supply) air to produce a fixed flow of

air to a zone. The unit contains a small fan that acts to induce the secondary air and a heating coil for heating the mixed secondary and primary air. The fan runs at a constant volume flow rate whenever the unit is on. The fan is downstream of the primary and secondary air inlets. The variable mixing is accomplished by a damper in the unit's primary air supply inlet duct. This damper can move from fully open (100% primary air. 0% secondary air) to a minimum stop that is specified in the input description. At full cooling the damper will be fully open. At minimum cooling and for heating the damper will be at the minimum stop and the secondary air flow will be at its maximum.

The EnergyPlus model of the series PIU terminal unit is composed of three components: a zone mixer, a constant volume fan, and a heating coil (hot water, electric, or gas).

Field: Name of terminal unit

A unique user assigned name for a particular series powered induction terminal unit. Any reference to this unit by another object will use this name.

Field: Unit availability schedule

The name of the schedule (ref: Schedule) that denotes whether the unit can run during a given hour. A schedule value greater than 0 (usually 1 is used) indicates that the unit can be on during the hour. A value less than or equal to 0 (usually 0 is used) denotes that the unit must be off for the hour.

Field: Maximum total air volume flow rate

The maximum volumetric air flow rate through the unit in cubic meters per second. Since this is a constant air volume unit, this is also the design, rated air flow rate of the unit.

Field: Maximum primary air volume flow rate

The maximum volumetric air flow rate of primary air through the unit in cubic meters per second. This is the primary air flow rate at full cooling load when the primary air damper is fully open. Usually this quantity is the same as the total unit flow rate, but it can be less.

Field: Minimum primary air flow fraction

The minimum volumetric air flow rate of primary air through the unit expressed as a fraction of the maximum volumetric air flow rate of primary air. This input can be 0.0.

Field:Terminal unit supply air inlet node

The name of the HVAC system node from which the unit draws its primary or supply air

Field: Terminal unit secondary air inlet node

The name of the HVAC system node from which the unit draws its secondary or recirculated air.

Field: Terminal unit outlet node

The name of the HVAC system node to which the unit sends its outlet air. This should be one of the inlet air nodes of the zone which is being served.

Field: Reheat coil air inlet node

The name of the HVAC system node which is the inlet node of the unit's heating coil. This is also the outlet node of the unit's fan.

Field: Zone Mixer component name

The name of an zone mixer component which composes part of the fan coil unit. Note that some of the input for the mixer will duplicate input fields of the powered induction unit. One of the zone mixer inlet nodes should be the same as the supply air inlet node of the PIU; the other inlet node of the zone mixer should be the same as the secondary air inlet node of the PIU. The outlet node of the zone mixer should be the same as the inlet node of the PIU fan.

Field: Fan component name

The name of a fan component which composes part of the unit. Note that the fan's maximum flow rate should be the same as the maximum air flow rate of the PIU. The fan's inlet node should be the same as the zone mixer's outlet node. The fan's outlet node should be the same as the heating coil's air inlet node.

Field: Reheat coil object

The type of coil in the PIU. The choices are:

COIL:Water:SimpleHeating

COIL:Electric:Heating

COIL:Gas:Heating

In other words the PIU may have a hot water, gas, or electric reheat coil.

Field: Reheat coil name

The name of the heating coil component which composes part of the unit. Note that the heating coil's air inlet node is the same as the fan outlet node and the heating coil's air outlet node is the same as the PIU outlet node.

Field: Maximum reheat water flow

The maximum hot water volumetric flow rate in m^3/sec through the unit's heating coil. If the heating coil is gas or electric this field should be blank.

Field: Minimum reheat water flow

The minimum hot water volumetric flow rate in m^3/sec through the unit's heating coil. If the heating coil is gas or electric this field should be blank.

Field: Hot water control node

The name of the HVAC system node which regulates the flow of hot water through the unit. This should be the same node as the water inlet node of the unit's hot water coil. For gas or electric heating coils, this input should be blank.

Field: Convergence Tolerance

The control tolerance for the unit heating output. The unit is controlled by matching the unit output to the zone demand. For units with water coils, the model must be numerically inverted to obtain a specified output. The convergence tolerance is the error tolerance used to terminate the numerical inversion procedure. Basically this is the fraction:

$$\frac{\left|Q_{PIU,out} - Q_{zone\ load}\right|}{Q_{zone\ load}}$$

For gas or electric heating coils, this input should be left blank. The default is 0.001.

The full IDD specification follows:

```
SINGLE DUCT:SERIES PIU:REHEAT,
  A1,     \field terminal box name
        \required-field
          \type alpha
  A2,     \field unit availability schedule
        \required-field
          \type object-list
          \object-list ScheduleNames
  N1,     \field maximum total air volume flow rate
        \required-field
          \type real
          \units m3/s
          \autosizable
  N2,     \field maximum primary air volume flow rate
        \required-field
          \type real
          \units m3/s
          \autosizable
  N3,     \field minimum primary air flow fraction
        \required-field
          \type real
          \autosizable
  A3,     \field terminal box supply air inlet node
          \type alpha
  A4,     \field terminal box secondary air inlet node
          \type alpha
  A5,     \field terminal box outlet node
          \type alpha
  A6,     \field Reheat coil air inlet node (fan outlet node)
          \type alpha
  A7,     \field Zone Mixer component name
          \type alpha
  A8,     \field Fan component name
          \type alpha
  A9,     \field Reheat Coil object
          \type choice
          \key COIL:Water:SimpleHeating
          \key COIL:Electric:Heating
          \key COIL:Gas:Heating
  A10,     \field Reheat Coil name
          \type object-list
          \object-list HeatingCoilName
  N4,     \field Max Reheat Water Flow
          \type real
          \units m3/s
          \autosizable
  N5,     \field Min Reheat Water Flow
          \type real
          \units m3/s
          \minimum 0.0
          \default 0.0
  A11,    \field reheat water control node
          \type alpha
  N6;     \field Convergence Tolerance
          \type real
          \Minimum> 0.0
          \Default 0.001
```

An IDF example:

```
SINGLE DUCT:SERIES PIU:REHEAT,
      Zone 1 SPIU ATU,          ! Name of air terminal unit
      FanAndCoilAvailSched,     ! Availability schedule for series PIU ATU
      0.47,                     ! Total volume flow rate through ATU
      0.47,                     ! Maximum primary air flow rate through terminal unit
      0.3,                      ! Minimum primary air flow rate (fraction of max)
      Zone 1 PIU Pri Air Inlet Node,   ! Air Terminal unit supply air inlet node
      Zone 1 PIU Sec Air Inlet Node,   ! Air Terminal unit secondary air inlet node
      Zone 1 PIU Air Outlet Node,      ! Air Terminal unit outlet node
      Zone 1 Reheat Air Inlet Node,    ! Reheat coil air inlet node (fan outlet node)
      Zone 1 PIU Mixer,                ! Air terminal unit mixer name
      Zone 1 PIU Fan,                  ! Air terminal unit fan name
      COIL:Water:SimpleHeating,        ! type of air terminal unit reheat coil
      Reheat Coil Zone 1,              ! name of air terminal unit reheat coil
      0.0013,                          ! Max Reheat Water Flow {Flow: m3/sec}
      0.0,                             ! Min Reheat Water Flow {Flow: m3/sec}
      Zone 1 Reheat Water Inlet Node,  ! Control node
      0.001;                    ! Convergence tolerance
```

Single Duct:Series PIU:Reheat Outputs

```
HVAC,Average,PIU Heating Rate[W]
HVAC,Sum,PIU Heating Energy[J]
HVAC,Average,PIU Sensible Cooling Rate[W]
HVAC,Sum,PIU Sensible Cooling Energy[J]
```

Field: PIU Heating Rate[W]

This field reports the dry air heating addition rate of the series PIU terminal unit to the zone it is serving in Watts. This is determined by outlet and zone air conditions and the mass flow rate through the terminal unit.

Field: PIU Heating Energy[J]

This field reports the dry air heat addition of the series PIU terminal unit to the zone it is serving in Joules over the time step being reported. This is determined by outlet and zone air conditions, the mass flow rate through the terminal unit, and the time step.

Field: PIU Sensible Cooling Rate[W]

This field reports the dry air sensible heat extraction rate of the series PIU terminal unit from the zone it is serving in Watts. This is determined by the outlet and zone conditions and the mass flow rate through the terminal unit.

Field: PIU Sensible Cooling Energy[J]

This field reports the dry air sensible heat extraction of the series PIU terminal unit from the zone it is serving in Joules over the time step being reported. This is determined by outlet and zone air conditions, the mass flow rate through the terminal unit, and the time step.

Single Duct:Parallel PIU:Reheat

The parallel powered induction unit is an air system terminal unit that mixes varying amounts of secondary (recirculated) air and primary (conditioned supply) air to produce a variable total flow of air to a zone. The unit contains a small fan that acts to induce the secondary air and a heating coil for heating the mixed secondary and primary air. The secondary and primary air streams enter the unit in parallel. The fan sits in the secondary air stream and runs only when secondary air is needed. The primary air inlet contains a damper that can move from fully open (maximum primary air) to a minimum stop (minimum primary air).

At full cooling load the primary air damper is fully open and the fan is off. The primary air flow is at maximum and there is little or no secondary air flow. As the cooling load decreases, the

primary air damper gradually closes and the secondary air flow remains close to zero. At some point, usually when the primary air flow has reached the minimum, the fan switches on and secondary air is induced. The heating coil will switch on as needed to meet ant heating demand.

The EnergyPlus model of the parallel PIU terminal unit is composed of three components: a constant volume fan, a zone mixer, and a heating coil (hot water, electric, or gas).

Field: Name of terminal unit

A unique user assigned name for a particular parallel powered induction terminal unit. Any reference to this unit by another object will use this name.

Field: Unit availability schedule

The name of the schedule (ref: Schedule) that denotes whether the unit can run during a given hour. A schedule value greater than 0 (usually 1 is used) indicates that the unit can be on during the hour. A value less than or equal to 0 (usually 0 is used) denotes that the unit must be off for the hour.

Field: Maximum primary air volume flow rate

The maximum volumetric air flow rate of primary air through the unit in cubic meters per second. This is the primary air flow rate at full cooling load when the primary air damper is fully open.

Field: Maximum secondary air volume flow rate

The maximum volumetric air flow rate of primary air through the unit in cubic meters per second. This flow rate can be any amount but is commonly less than the maximum primary air flow rate.

Field: Minimum primary air flow fraction

The minimum volumetric air flow rate of primary air through the unit expressed as a fraction of the maximum volumetric air flow rate of primary air. This input can be 0.0.

Field: Fan on flow fraction

The fraction of the primary air flow at which fan turns on. In the parallel PIU the fan operation is intermittent. If the primary air flow is above this fraction of the maximum, the fan is off. Otherwise it is on.

Field:Terminal unit supply air inlet node

The name of the HVAC system node from which the unit draws its primary or supply air

Field: Terminal unit secondary air inlet node

The name of the HVAC system node from which the unit draws its secondary or recirculated air.

Field: Terminal unit outlet node

The name of the HVAC system node to which the unit sends its outlet air. This should be one of the inlet air nodes of the zone which is being served.

Field: Reheat coil air inlet node

The name of the HVAC system node which is the inlet node of the unit's heating coil. This is also the outlet node of the unit's fan.

Field: Zone Mixer component name

The name of an zone mixer component which composes part of the fan coil unit. Note that some of the input for the mixer will duplicate input fields of the powered induction unit. One of the zone mixer inlet nodes should be the same as the supply air inlet node of the PIU; the other inlet node of the zone mixer should be the same as the air outlet node of the fan. The outlet node of the zone mixer should be the same as the inlet node of the heating coil.

Field: Fan component name

The name of a fan component which composes part of the unit. Note that the fan's maximum flow rate should be the same as the maximum secondary air flow rate of the PIU. The fan's inlet node should be the same as the PIU secondary air inlet node. The fan's outlet node should be the same as one of the zone mixer's inlet nodes.

Field: Reheat coil object

The type of coil in the PIU. The choices are:

COIL:Water:SimpleHeating

COIL:Electric:Heating

COIL:Gas:Heating

In other words the PIU may have a hot water, gas, or electric reheat coil.

Field: Reheat coil name

The name of the heating coil component which composes part of the unit. Note that the heating coil's air inlet node is the same as the zone mixer's outlet node and the heating coil's air outlet node is the same as the PIU outlet node.

Field: Maximum reheat water flow

The maximum hot water volumetric flow rate in m^3/sec through the unit's heating coil. If the heating coil is gas or electric this field should be blank.

Field: Minimum reheat water flow

The minimum hot water volumetric flow rate in m^3/sec through the unit's heating coil. If the heating coil is gas or electric this field should be blank.

Field: Hot water control node

The name of the HVAC system node which regulates the flow of hot water through the unit. This should be the same node as the water inlet node of the unit's hot water coil. For gas or electric heating coils, this input should be blank.

Field: Convergence Tolerance

The control tolerance for the unit heating output. The unit is controlled by matching the unit output to the zone demand. For units with water coils, the model must be numerically inverted to obtain a specified output. The convergence tolerance is the error tolerance used to terminate the numerical inversion procedure. Basically this is the fraction:

$$\frac{\left|Q_{PIU,out} - Q_{zone\ load}\right|}{Q_{zone\ load}}$$

For gas or electric heating coils, this input should be left blank. The default is 0.001.

The full IDD specification follows:

```
SINGLE DUCT:PARALLEL PIU:REHEAT,
  A1,     \field terminal box name
        \required-field
          \type alpha
  A2,     \field unit availability schedule
        \required-field
          \type object-list
          \object-list ScheduleNames
  N1,     \field maximum primary air volume flow rate
        \required-field
          \type real
          \units m3/s
          \autosizable
  N2,     \field maximum secondary air volume flow rate
        \required-field
          \type real
          \units m3/s
          \autosizable
  N3,     \field minimum primary air flow fraction
        \required-field
          \type real
          \autosizable
  N4,     \field fan on flow fraction
        \required-field
          \type real
          \autosizable
          \note the fraction of the primary air flow at which fan turns on
  A3,     \field terminal box supply air inlet node
          \type alpha
  A4,     \field terminal box secondary air inlet node
          \type alpha
  A5,     \field terminal box outlet node
          \type alpha
  A6,     \field Reheat coil air node inlet node
          \type alpha
          \note mixer outlet node
  A7,     \field Zone Mixer component name
          \type alpha
  A8,     \field Fan component name
          \type alpha
  A9,     \field Reheat Coil object
          \type choice
          \key COIL:Water:SimpleHeating
          \key COIL:Electric:Heating
          \key COIL:Gas:Heating
  A10,    \field Reheat Coil name
          \type object-list
          \object-list HeatingCoilName
  N5,     \field Max Reheat Water Flow
          \type real
          \units m3/s
          \autosizable
  N6,     \field Min Reheat Water Flow
          \type real
          \units m3/s
          \minimum 0.0
          \default 0.0
  A11,    \field reheat water control node
          \type alpha
  N7;     \field Convergence Tolerance
          \type real
          \Minimum> 0.0
          \Default 0.001
```

An IDF example:

```
SINGLE DUCT:PARALLEL PIU:REHEAT,
      Zone 3 PPIU ATU,          ! Name of air terminal unit
      FanAndCoilAvailSched,     ! Availability schedule for series PIU ATU
      0.47,                     ! Maximum primary air flow rate through terminal unit
      0.375,                    ! Maximum secondary air flow rate through the terminal unit
      0.1,                      ! Minimum primary air flow rate (fraction of max)
      0.1,                      ! fan on flow fraction
      Zone 3 PIU Pri Air Inlet Node,   ! Air Terminal unit supply air inlet node
      Zone 3 PIU Sec Air Inlet Node,   ! Air Terminal unit secondary air inlet node
      Zone 3 PIU Air Outlet Node,      ! Air Terminal unit outlet node
      Zone 3 Reheat Air Inlet Node,    ! Reheat coil air inlet node (fan outlet node)
      Zone 3 PIU Mixer,                ! Air terminal unit mixer name
      Zone 3 PIU Fan,                  ! Air terminal unit fan name
      COIL:Water:SimpleHeating,        ! type of air terminal unit reheat coil
      Reheat Coil Zone 3,              ! name of air terminal unit reheat coil
      0.0013,                          ! Max Reheat Water Flow {Flow: m3/sec}
      0.0,                             ! Min Reheat Water Flow {Flow: m3/sec}
      Zone 3 Reheat Water Inlet Node,  ! Control node
      0.001;                    ! Convergence tolerance
```

Single Duct:Parallel PIU:Reheat Outputs

```
HVAC,Average,PIU Heating Rate[W]
HVAC,Sum,PIU Heating Energy[J]
HVAC,Average,PIU Sensible Cooling Rate[W]
HVAC,Sum,PIU Sensible Cooling Energy[J]
```

Field: PIU Heating Rate[W]

This field reports the dry air heating addition rate of the parallel PIU terminal unit to the zone it is serving in Watts. This is determined by outlet and zone air conditions and the mass flow rate through the terminal unit.

Field: PIU Heating Energy[J]

This field reports the dry air heat addition of the parallel PIU terminal unit to the zone it is serving in Joules over the time step being reported. This is determined by outlet and zone air conditions, the mass flow rate through the terminal unit, and the time step.

Field: PIU Sensible Cooling Rate[W]

This field reports the sensible heat extraction rate of the parallel PIU terminal unit from the zone it is serving in Watts. This is determined by the outlet and zone conditions and the mass flow rate through the terminal unit.

Field: PIU Sensible Cooling Energy[J]

This field reports the dry air sensible heat extraction of the parallel PIU terminal unit from the zone it is serving in Joules over the time step being reported. This is determined by outlet and zone air conditions, the mass flow rate through the terminal unit, and the time step.

Group – Local Convective Units

Purchased Air

The simplest piece of equipment that can be attached to a zone equipment loop is PURCHASED AIR. Typically, purchased air is used on its own to assist a user in sizing an HVAC system for flow rates, coil sizes, etc. In such a case, air loop, plant, and condenser descriptions are not needed. In this simplified case, only the zone controls, the zone

equipment configuration, and the purchased air statements are necessary to provide conditioning to the zone. The PURCHASED AIR statement includes an identifying name, a supply air node number that should match the zone being served, and inlet air conditions for heating and cooling cases. Note that a purchased air object has no maximum or minimum capacity or flow rate. Whatever airflow is needed to meet the zone load will be provided.

Field: Purchased Air Name

A unique user assigned name for each purchased air component. Any other component that needs to use this purchased air component will refer to it by this name.

Field: Zone Supply Air Node Name

The name of the outlet air node of the purchased air object. This should be the same as one of the supply air nodes for the zone the purchased air component is serving.

Field: Heating Supply Air Temp

The constant air temperature (degrees C) of the air used for heating the zone.

Field: Cooling Supply Air Temp

The constant air temperature (degrees C) of the air used for cooling the zone.

Field: Heating Supply Air Humidity Ratio

The constant humidity ratio (kg of water per kg of dry air) of the hot supply air.

Field: Cooling Supply Air Humidity Ratio

The constant humidity ratio (kg of water per kg of dry air) of the hot supply air.

```
PURCHASED AIR,
  A1 , \field Purchased Air Name
  A2 , \field Zone Supply Air Node Name
  N2 , \field Heating Supply Air Temp
       \units C
       \minimum> -100
       \maximum< 100
  N3 , \field Cooling Supply Air Temp
       \units C
       \minimum> -100
       \maximum< 100
  N4 , \field Heating Supply Air Humidity Ratio
       \units kg-H20/kg-air
       \minimum> 0
  N5 ; \field Cooling Supply Air Humidity Ratio
       \units kg-H20/kg-air
       \minimum> 0
```

An example of this statement in an IDF is:

```
PURCHASED AIR, Zone2Air,NODE_2,50,13,0.015,0.010;
```

Purchased Air Outputs

```
HVAC,Sum,Purchased Air Heating Energy[J]
HVAC,Average,Purchased Air Heating Rate[W]
HVAC,Sum,Purchased Air Cooling Energy[J]
HVAC,Average,Purchased Air Cooling Rate[W]
```

Direct Air

Central system air is usually supplied to a zone through a terminal unit such as a single duct VAV reheat box. Sometimes, however, it is desirable to supply central system air directly to a

zone without any zone level control or tempering. An example would be a single zone reheat system.

The control zone receives supply air directly from the central system since the supply air temperature has been adjusted to control the temperature in the control zone. The slave zones then have baseboards or reheat coils to allow some temperature adjustment. The Direct Air object creates the capability of supplying central system air directly to a zone. Its input consists of the object name, an availability (on/off) schedule, and a node name. This node is both a zone inlet node and an outlet node of the Zone Splitter.

For the Direct Air objects to work correctly, it is important in any systems including Direct Air objects for the sum of the maximum zone air flow rates to be equal to the maximum central system flow rate. The zone maximum flow rates are specified in the zone terminal unit or direct air inputs. The central air system flow rate is specified in the Air Primary Loop input and also in the air loop branch and central fan inputs.

Field: Direct Air Name

A unique user assigned name for each direct air component. Any other component that needs to use this direct air component will refer to it by this name.

Field: Schedule name for on/off schedule

The name of the schedule (ref: Schedule) that denotes whether the direct air component can run during a given hour. A schedule value greater than 0 (usually 1 is used) indicates that the direct air component can be on during the hour. A value less than or equal to 0 (usually 0 is used) denotes that the direct air component must be off for the hour

Field: Zone Supply Air Node Name

The name of the node to which the direct air component is supplying air. This should be one of the supply air nodes for the zone the direct air component is serving. This node should also be an outlet node of a zone splitter component.

Field: Maximum Air Flow Rate

The design maximum volume flow rate (m^3/sec) specified for Direct Air, Air Distribution Unit (ADU).

The IDD definition is shown below.

```
DIRECT AIR,
   A1, \field Direct Air Name
   A2, \field Schedule name for on/off schedule
       \type object-list
       \object-list ScheduleNames
   A3, \field Zone Supply Air Node Name
   N1; \field Maximum air flow rate
       \units m3/s
       \Minimum 0.0
```

An example input follows.

```
DIRECT AIR,
    Zone1DirectAir,
    FanAndCoilAvailSched,
    Zone 1 Inlet Node,
    0.47;
DIRECT AIR,
    Zone2DirectAir,
    FanAndCoilAvailSched,
    Zone 2 Inlet Node,
    0.36;
DIRECT AIR,
    Zone3DirectAir,
    FanAndCoilAvailSched,
    Zone 3 Inlet Node,
    0.47;
```

Fan Coil Unit: 4 Pipe

The fan coil units are zone equipment units which are assembled from other components. Fan coils contain an outdoor air mixer, a fan, a simple heating coil and a simple cooling coil. These components are described elsewhere in this document. The fan coil input simply requires the names of these four components, which have to be described elsewhere in the input. The input also requires the name of an availability schedule, maximum airflow rate, an outside airflow rate, and maximum and minimum hot and cold water volumetric flow rates. The unit is connected to the zone inlet and exhaust nodes and the outside air by specifying unit inlet, outlet, outside air and exhaust (relief) air node names. Note that the unit air inlet node should be the same as a zone exhaust node and the unit outlet node should be the same as a zone inlet node. The fan coil unit is connected to a hot water loop (demand side) through its hot water coil and to a chilled water loop (demand side) through its cooling coil.

The unit is controlled to meet the zone (remaining) heating or cooling demand. If there is a heating demand, the cooling coil is off and the hot water flow through the heating coil is throttled to meet the demand. The hot water control node must be specified (same as the hot water coil inlet node) as well as maximum and minimum possible hot water volumetric flow rates. If there is a cooling demand from the zone, the hot water coil is off and the chilled water flow through the cooling coil is throttled to meet the load. The cooling coil control node must be specified (same as the cooling coil inlet node) and the maximum and minimum chilled water volumetric flow rates must be given. Finally both heating and cooling require a convergence tolerance, which denotes how closely the fan coil unit will meet the heating or cooling load. The tolerance is always relative to the zone load.

Field: name of fan coil unit

A unique user assigned name for an instance of a Fan Coil unit. Any reference to this Fan Coil unit by another object will use this name.

Field: availability schedule

The name of the schedule (ref: Schedule) that denotes whether the fan coil unit can run during a given hour. A schedule value greater than 0 (usually 1 is used) indicates that the unit can be on during the hour. A value less than or equal to 0 (usually 0 is used) denotes that the unit must be off for the hour.

Field: maximum air flow rate

The maximum volumetric airflow rate (m^3/sec) through the fan coil unit. Since this is a constant air volume unit, this is also the design, rated airflow rate of the unit.

Field: maximum outside air flow rate

If the fan coil unit uses outside air, this field specifies the outside air volumetric flow rate (m^3/sec). This flow rate should be less than or equal to the maximum airflow rate. A value of zero specifies no outside air. Note that the outside airflow rate is fixed: it cannot change during the simulation

Field: air inlet node

The name of the HVAC system node from which the fan coil unit draws its indoor air. This should be one of zone exhaust nodes for the zone which the fan coil unit is serving.

Field: air outlet node

The name of the HVAC system node to which the fan coil unit sends its outlet air. This should be one of the inlet air nodes of the zone which is being served.

Field: outside air node

The name of the HVAC system node from which the fan coil unit draws its outside air. This should be the same node as the outside air node of the unit's outside air mixer.

Field: air relief node

The name of the HVAC system node (to which the fan coil unit exhausts its relief air. This should be the same node as the relief air node of the unit's outside air mixer.

Field: cold water control node

The name of the HVAC system node which regulates the flow of the cold water through the fan coil unit. This should be the same node as the water inlet node for the unit's cooling coil.

Field: hot water control node

The name of the HVAC system node which regulates the flow of hot water through the fan coil unit. This should be the same node as the water inlet node of the unit's hot water coil.

Field: outside air mixer name

The name of an outside air mixer component which composes part of the fan coil unit. Note that some of the input for the outside air mixer will duplicate input fields of the fan coil unit. The outside air node of the outside air mixer should be the same as the outside air node of the fan coil unit. The relief air node of the outside air mixer should be the same as the relief air node of the fan coil unit. In addition, the return air node of the outside air mixer should be the same node as the air inlet node of the fan coil unit. In addition, the outside air mixer's mixed air node should be the same as the inlet air node of the fan coil unit's fan.

Field: fan name

The name of a constant volume fan component that composes part of the fan coil unit. Note that the fan's maximum flow rate should be the same as the maximum airflow rate of the fan coil unit. The fan's inlet node should be the same as the outside air mixer's mixed air node. The fan's outlet node should be the same as the cooling coil's air inlet node.

Field: cooling coil name

The name of the cooling coil component that composes part of the fan coil unit. The cooling coil air inlet node should be the same as the fan outlet node. The cooling coil air outlet node should be the same as the heating coil air inlet node.

Field: maximum cold water flow

The maximum cold water volumetric flow rate (m^3/sec) through the fan coil unit's cooling coil.

Field: minimum cold water flow

The minimum cold water volumetric flow rate (m^3/sec) through the fan coil unit's cooling coil.

Field: Cooling Convergence Tolerance

The convergence tolerance for the control of the unit cooling output. The unit is controlled by matching the unit output to the zone demand. For units with water coils, the model must be numerically inverted to obtain a specified output. The cooling convergence tolerance is the error tolerance used to terminate the numerical inversion procedure. Basically this is the fraction:

$$\square(Q_{\text{fan coil, out}} - Q_{\text{zone load}})\square \; / \; Q_{\text{zone load}}$$

Field: heating coil name

The name of the heating coil component that composes part of the fan coil unit. The heating coil air inlet node should be the same as the cooling coil outlet node. The heating coil air outlet node should be the same as the fan coil air outlet node.

Field: maximum hot water flow

The maximum hot water volumetric flow rate (m^3/sec) through the fan coil unit's heating coil.

Field: minimum hot water flow

The minimum hot water volumetric flow rate (m^3/sec) through the fan coil unit's heating coil.

Field: Heating Convergence Tolerance

The convergence tolerance for the control of the unit heating output. The unit is controlled by matching the unit output to the zone demand. For units with water coils, the model must be numerically inverted to obtain a specified output. The heating convergence tolerance is the error tolerance used to terminate the numerical inversion procedure. Basically this is the fraction:

$$\square(Q_{\text{fan coil, out}} - Q_{\text{zone load}})\square \; / \; Q_{\text{zone load}}$$

The input data dictionary definition of the unit is as follows.

```
FAN COIL UNIT:4 PIPE,
   A1 , \field name of fan coil unit
   A2 , \field availability schedule
        \type object-list
        \object-list ScheduleNames
   N1 , \field maximum air flow rate
        \units m3/s
   N2 , \field maximum outside air flow rate
        \units m3/s
   A3 , \field air inlet node
   A4 , \field air outlet node
   A5 , \field outside air node
   A6 , \field air relief node
   A7 , \field cold water control node
   A8 , \field hot water control node
   A9 , \field outside air mixer name
   A10, \field fan name
   A11, \field cooling coil name
   N3 , \field maximum cold water flow
        \units m3/s
   N4 , \field minimum cold water flow
        \units m3/s
   N5 , \field Cooling Convergence Tolerance
        \type real
        \Minimum> 0.0
        \Default 0.001
   A12, \field heating coil name
   N6 , \field maximum hot water flow
        \units m3/s
   N7 , \field minimum hot water flow
        \units m3/s
   N8 ; \field Heating Convergence Tolerance
        \type real
        \Minimum> 0.0
        \Default 0.001
```

An example input for a fan coil unit, including its constituent components, is shown below.

```
FAN COIL UNIT:4 PIPE,
       Zone1FanCoil, ! Name
       FanAndCoilAvailSched, ! on/off schedule
       0.84, ! air flow rate in m3/s
       0.05,  ! outside air flow rate in m3/s
       Zone1FanCoilAirInletNode, ! air inlet node to fancoil; also a zone exhaust node
       Zone1FanCoilAirOutletNode, ! air outlet node of fancoil; also a zone inlet node
       Zone1FanCoilOAInNode, ! fancoil outside air inlet node
       Zone1FanCoilExhNode, ! fancoil relief air node
       Zone1FanCoilChWInletNode, ! fancoil chilled water control node
       Zone1FanCoilHWInletNode, ! fancoil hot water control node
       Zone1FanCoilOAMixer, ! name of outside air mixer in fancoil
       Zone1FanCoilFan, ! name of fan in fancoil
       Zone1FanCoilCoolingCoil, ! name of cooling coil in fancoil
       0.0010, ! max chilled water flow rate m3/s
       0.0, ! min chilled water flow rate m3/s
       0.001, ! tolerance on chilled water control
       Zone1FanCoilHeatingCoil, ! mame of heating coil in fancoil
       0.0005, ! max hot water flow rate m3/s
       0.0, ! min hot water flow rate m3/s
       0.001; ! tolerance on hot water control

   OUTSIDE AIR MIXER,
       Zone1FanCoilOAMixer, ! name
       Zone1FanCoilOAMixerOutletNode, ! mixer outlet node
       Zone1FanCoilOAInNode, ! mixer OA node
       Zone1FanCoilExhNode, ! mixer relief node
       Zone1FanCoilAirInletNode; ! mixer inlet node
```

```
FAN:SIMPLE:ConstVolume,
    Zone1FanCoilFan, ! name
    FanAndCoilAvailSched, ! fan on/off schedule
    0.5, ! total efficiency
    75.0, ! pressure rise in Pascals (typical fan coil value)
    0.84, ! flow rate in m3/s
    0.9, ! motor efficiency
    1.0, ! motor in air stream fraction
    Zone1FanCoilOAMixerOutletNode, ! fancoil fan inlet node
    Zone1FanCoilFanOutletNode; ! fancoil fan outlet node

COIL:Water:SimpleCooling,
    Zone1FanCoilCoolingCoil, ! name
    FanAndCoilAvailSched, ! coil on/off schedule
    600., ! UA of coil
    0.0010, ! max water flow in m3/s
    0.9, ! leaving air relative humidity
    Zone1FanCoilChWInletNode, ! water inlet node
    Zone1FanCoilChWOutletNode, ! water outlet node
    Zone1FanCoilFanOutletNode, ! coil air inlet node
    Zone1FanCoilCCOutletNode; ! coil air outlet node

COIL:Water:SimpleHeating,
    Zone1FanCoilHeatingCoil, ! name
    FanAndCoilAvailSched, ! coil on/off schedule
    400., ! UA of coil
    0.0005, ! max water flow in m3/s
    Zone1FanCoilHWInletNode, ! water inlet node
    Zone1FanCoilHWOutletNode, ! water outlet node
    Zone1FanCoilCCOutletNode, ! coil air inlet node
    Zone1FanCoilAirOutletNode; ! coil air outlet node
```

Fan Coil Outputs

```
HVAC,Average,Fan Coil Heating Rate[W]
HVAC,Sum,Fan Coil Heating Energy[J]
HVAC,Average,Fan Coil Total Cooling Rate[W]
HVAC,Sum,Fan Coil Total Cooling Energy[J]
HVAC,Average,Fan Coil Sensible Cooling Rate[W]
HVAC,Sum,Fan Coil Sensible Cooling Energy[J]
HVAC,Average,Fan Coil Electric Power[W]
HVAC,Sum,Fan Coil Electric Consumption[J]
```

Field: Fan Coil Heating Rate[W]

This field reports the dry air heating addition rate of the fan coil unit to the zone it is serving in Watts. This is determined by outlet and zone air conditions and the mass flow rate through the unit.

Field: Fan Coil Heating Energy[J]

This field is the dry air heat addition of the fan coil unit to the zone it is serving in Joules over the time step being reported. This is determined by outlet and zone air conditions, the mass flow rate through the unit, and the time step.

Field: Fan Coil Total Cooling Rate[W]

This field is the total (sensible and latent) heat extraction rate of the fan coil unit from the zone it is serving in Watts. This is determined by the outlet and zone conditions and the mass flow rate through the unit.

Field: Fan Coil Total Cooling Energy[J]

This field is the total (sensible and latent) heat extraction of the fan coil unit from the zone it is serving in Joules over the time step being reported. This is determined by outlet and zone air conditions, the mass flow rate through the unit, and the time step.

Field: Fan Coil Sensible Cooling Rate[W]

This field reports the dry air sensible heat extraction rate of the fan coil unit from the zone it is serving in Watts. This is determined by the outlet and zone conditions and the mass flow rate through the unit.

Field: Fan Coil Sensible Cooling Energy[J]

This field is the dry air sensible heat extraction of the fan coil unit from the zone it is serving in Joules over the time step being reported. This is determined by the outlet and zone conditions, the mass flow rate through the unit, and the time step.

Field: Fan Coil Electric Power[W]

This field reports the electricity consumption rate of the fan coil unit in Watts.

Field: Fan Coil Electric Consumption[J]

This field is the electricity consumption of the fan coil unit in Joules over the time step being reported.

Unit Ventilator

Unit ventilators are zone equipment units which are assembled from other components. They contain a built-in outdoor air mixer, a fan, a heating coil, and a cooling coil. These components are described elsewhere in this document, except the built-in outdoor air mixer which is contained within the unit ventilator statement. The unit ventilator input simply requires the names of these other three components, which have to be described elsewhere in the input. The input also requires the name of an availability schedule, maximum airflow rate, outside air control information (control type and schedules), an outside airflow rate, and maximum and minimum hot and cold water mass flow rates. The unit is connected to the zone inlet and exhaust nodes and the outside air by specifying unit inlet, outlet, outside air and exhaust (relief) air node names. Note that the unit air inlet node should be the same as a zone exhaust node and the unit outlet node should be the same as a zone inlet node. In general, the unit ventilator input is very similar to the fan coil unit input, and the unit is connected to a hot water loop (demand side) through its hot water coil and to a chilled water loop (demand side) through its cooling coil.

The main difference between the fan coil and unit ventilator input is that the unit ventilator has a built-in outside air mixer with its own specialized controls. The outside air control type can be either “variable percent” or “fixed temperature”. In fixed temperature control, the amount of outside air is varied between the minimum outside air fraction (specified by a schedule) and 100% outside air to obtain a mixed air temperature as close as possible to the temperature schedule defined in the input. Variable percent control will also vary the amount of outside air between the minimum and maximum fractions (both specified in input by the user) to meet the load without the use of a coil if possible. These control types are based on the 1996 ASHRAE Systems and Equipment Handbook (pp. 31.1-31.3) description of unit ventilator systems.

The unit is controlled to meet the zone (remaining) heating or cooling demand. If there is a heating demand, the cooling coil is off and the hot water flow through the heating coil is throttled to meet the demand. The hot water control node must be specified (same as the hot water coil inlet node) as well as maximum and minimum possible hot water volumetric flow

rates. If there is a cooling demand from the zone, the hot water coil is off and the chilled water flow through the cooling coil is throttled to meet the load. The cooling coil control node must be specified (same as the cooling coil inlet node) and the maximum and minimum chilled water volumetric flow rates must be given. Finally both heating and cooling require a convergence tolerance, which is the tolerance denoting how closely the fan coil unit will meet the heating or cooling load. The tolerance is always relative to the zone load.

Overall, control of the unit must consider the outside air. Here is a more detailed description of the overall unit control:

OFF: Unit is schedule off or there is no load on it. All flow rates are set to zero and the temperatures are set to zone conditions (except for the outside air inlet).

HEATING/VARIABLE PERCENT: The unit is on, there is a heating load, and variable percent control is specified. The outside air fraction is set to the minimum outside air fraction (schedule based) and the heating coil is activated.

HEATING/FIXED TEMPERATURE: The unit is on, there is a heating load, and fixed temperature control is specified. The outside air fraction is varied in an attempt to obtain a mixed air temperature equal to the user specified temperature (schedule based). The heating coil is activated, if necessary.

COOLING/NO COIL: The unit is on, there is a cooling load, and no coil is present or it has been scheduled off. Set the amount of outside air based on the control type. Simulate the "mixing box".

COOLING/WITH COIL: The unit is on, there is a cooling load, and a cooling coil is present and scheduled on. Tries to use outside air as best as possible, then calls a cooling coil.

Note: controls are strictly temperature based and do not factor humidity into the equation (not an enthalpy economy cycle but rather a simple return air economy cycle). In addition, temperature predictions are not strict energy balances here in the control routine though in the mixing routine an energy balance is preserved.

The input data dictionary definition of the unit ventilator is as follows:

Field: name of unit ventilator

This field is simply the identifying name that distinguishes one particular unit ventilator from another in the input data file. Like all other names in EnergyPlus, it is assumed that this is a unique character string and that no other unit ventilators use this same name.

Field: availability schedule

This field is a schedule name (ref: Schedule) that determines whether the unit ventilator is available to operate. The schedule is interpreted as a digital switch. If the schedule value of the unit ventilator availability schedule for a particular time frame is less than or equal to zero, then the unit ventilator is unavailable and will not operate. For any schedule value greater than zero, the unit ventilator is considered available and may operate, if necessary.

Field: air inlet node

This field is a node name (character string) used to identify the node that serves as the inlet (air side) to the unit ventilator. In EnergyPlus, nodes represent points between components or at various points in the loops. In a unit ventilator, the air inlet node to the system will typically be the same node as a zone outlet node. While a node name may be referenced more than once in an input data file, each node must have a unique name.

Field: air outlet node

This field is a node name (character string) used to identify the node that serves as the outlet (air side) to the unit ventilator. In EnergyPlus, nodes represent points between components or at various points in the loops. In a unit ventilator, the air outlet node from the system will typically be the same node as a zone inlet node. While a node name may be referenced more than once in an input data file, each node must have a unique name.

Field: post-fan air node

This field is a node name (character string) used to identify the node that serves as the air outlet to fan of the the unit ventilator. In EnergyPlus, nodes represent points between components or at various points in the loops. In a unit ventilator, the air outlet node from the fan is also considered the inlet node to the coils. While a node name may be referenced more than once in an input data file, each node must have a unique name.

Field: fan name

This field is the name (character string) of a fan (ref: FAN:SIMPLE:ConstantVolume, FAN:SIMPLE:VariableVolume) that is part of the unit ventilator system. This name links the unit ventilator to particular fan data entered elsewhere in the input data file. A fan name is required since it is the prime mover of air in the unit ventilator system.

Field: maximum air flow rate

This field allows the user to enter the maximum volumetric flow rate of air through the unit ventilator system in m^3/sec. This parameter should be some real number greater than zero.

Field: outside air control type

This field allows the user to control how outside air is used in the unit ventilator system. The unit ventilator system described by this syntax has its own outside air handler. The two options for outside air control are “VARIABLE PERCENT” and “FIXED TEMPERATURE”. Those phrases (with the space between the words as shown) are the only allowed choices for this parameter. In general, the variable percent control will attempt to vary the amount of outside air between some minimum and maximum schedules of fractions (see next two fields) to best meet the current heating or cooling load. In contrast, the fixed temperature control will vary the amount of outside air between the minimum schedule (fraction of maximum, see next field) and 100% available outside air to come as close as possible to a desired mixed air temperature (see 2 fields down) that can be scheduled. More information on the controls and operation of the unit ventilator are given in the section above (preceding the IDD/IDF description).

Field: Minimum Outside Air Schedule (fraction of minimum)

This field contains a schedule name (ref: Schedule) that should contain values for the minimum outside air used by the unit ventilator system for IAQ or other reasons. Note that if the unit ventilator is scheduled off or if there is no load sensed in the zone that the system will not operate even to achieve the minimum air fraction. However, if the system is operating, it will always bring in this fraction of the minimum air flow rate (see minimum air flow rate field above).

Field: maximum outside air fraction or temperature schedule

This field can have one of two meanings depending the type of control selected in the outside air control type parameter above. If “VARIABLE PERCENT” control was selected, then this field is a schedule name (ref: Schedule) corresponding to a maximum air fraction schedule. Note that this is a fraction of the maximum airflow rate field (see parameter above) for the unit

ventilator. If “FIXED TEMPERATURE” control was selected, then this field is still a schedule name (ref: Schedule), but it corresponds to a schedule of mixed air temperatures that the outside air control will try to attain.

Field: outside air node

This field is a node name (character string) used to identify the node associated with fresh air brought into the unit ventilator from the outdoor environment. While from a simulation standpoint this name is arbitrary and not a “necessity”, assigning a name to this node allows the user to receive output on conditions at this node to verify the correct operation of the unit ventilator.

Field: outside air relief node

This field is a node name (character string) used to identify the node associated with air exhausted out of the unit ventilator to the outdoor environment. While from a simulation standpoint this name is arbitrary and not a “necessity”, assigning a name to this node allows the user to receive output on conditions at this node to verify the correct operation of the unit ventilator.

Field: post-"mixing box" node (inlet to coils)

This field is a node name (character string) used to identify the node associated with the “mixed” air of the unit ventilator. These conditions are post-“mixing box” since they are the conditions of the fraction of return air combined with the outside air. Since this is a simple system, this can also be viewed as the conditions of the air being sent to the coils. While from a simulation standpoint this name is arbitrary and not a “necessity”, assigning a name to this node allows the user to receive output on conditions at this node to verify the correct operation of the unit ventilator.

Field: maximum outside air flow rate

This field allows the user to enter the maximum volumetric flow rate of outside air that can be brought into the unit ventilator system in m^3/sec. This parameter should be some real number greater than zero. Note that the value for this parameter may be less than the maximum air flow rate of the unit ventilator and this may affect the maximum fraction of outside air within the control strategy defined above. This parameter is an absolute maximum and will supercede any scheduled fraction of the unit ventilator maximum airflow rate.

Field: minimum outside air flow rate

This field allows the user to enter the minimum volumetric flow rate of outside air (in m^3/sec) that will be brought in to the unit ventilator. The actual minumum outside air flow rate will be this number multiplied by the schedule value from the minimum outside air schedule.

Field: heating coil type

This field is the type of coil (ref: COIL:Water:SimpleHeating, COIL:Electric:Heating, COIL:Gas:Heating) that is used for heating in the unit ventilator system. This field must be one of the three following three keywords: COIL:Water:SimpleHeating, COIL:Electric:Heating, COIL:Gas:Heating. It is used in conjunction with the heating coil name (see next field) to specify the heating coil present within the system.

Field: heating coil name

This field is the name (character string) of the heating coil (ref: COIL:Water:SimpleHeating, COIL:Electric:Heating, COIL:Gas:Heating) that is part of the unit ventilator system. It is assumed that there is always some sort of heating coil associated with a unit ventilator

system. This name links the unit ventilator to particular heating coil data entered elsewhere in the input data file.

Field: maximum hot water flow

This field allows the user to enter a maximum volumetric flow rate of water through a water heating coil in m^3/sec. This number should be some number greater than zero and greater than the minimum hot water volumetric flow rate (see next field). Note that this parameter has no meaning for either an electric or a gas heating coil. This field is ignored for gas and electric heating coils.

Field: minimum hot water flow

This field allows the user to enter a minimum volumetric flow rate of water through a water heating coil in m^3/sec. This number should be some number greater than zero and less than the maximum hot water volumetric flow rate (see previous field). Note that this parameter has no meaning for either an electric or a gas heating coil.

Field: hot water control node

This field corresponds to the water inlet node to the heating coil for a water coil. The water inlet node controls how a water heating coil operates and is required for the unit ventilator to function properly. This field is ignored for gas and electric heating coils.

Field: Heating Convergence Tolerance

The control tolerance for the unit heating output. This field allows the user some control over how closely the heating coil will control the air side conditions. The relative size of this parameter relates directly to the closeness of the control. A very small value in this field will result in tight control and will probably result in larger numbers of iterations. A large value in this field will result in looser controls and could result in unsatisfactory fluctuations in supply conditions (that could in turn result in excessive iterations). Initial experience with this parameter lends to the recommendation of using 0.001 as a starting point. This field is ignored for gas and electric heating coils.

The unit is controlled by matching the unit output to the zone demand. For units with water coils, the model must be numerically inverted to obtain a specified output. The heating convergence tolerance is the error tolerance used to terminate the numerical inversion procedure. Basically this is the fraction:

$$\frac{\left|Q_{UnitVentilator,Out} - Q_{ZoneLoad}\right|}{Q_{ZoneLoad}}$$

Field: cooling coil name

This field is the name (character string) of the cooling coil (ref: COIL:Water:SimpleCooling, COIL:Water:DetailedFlatCooling) that is part of the unit ventilator system. This name links the unit ventilator to particular cooling coil data entered elsewhere in the input data file. Note that a cooling coil is not a required part of a unit ventilator system. If no cooling coil is present, the previous field may be followed by a semi-colon and the remaining parameters in this statement may be ignored.

Field: cooling coil availability schedule

This field allows the user to schedule (ref: Schedule) when a cooling coil is available. This schedule can be anything the user wishes such as seasonally or during occupied hours. The

value of the schedule is simply a digital trigger. If the value is less than or equal to zero, then the cooling coil is not available. If the value of the schedule is greater than zero, then the cooling coil is available and will be operated if there is a cooling load and ventilation alone will not meet the load.

Field: maximum cold water flow

This field allows the user to enter a maximum volumetric flow rate of water through a water cooling coil in m^3/sec. This number should be some number greater than zero and greater than the minimum chilled water volumetric flow rate (see next field).

Field: minimum cold water flow

This field allows the user to enter a minimum volumetric flow rate of water through a water cooling coil in m^3/sec. This number should be some number greater than zero and less than the maximum chilled water volumetric flow rate (see previous field).

Field: cold water control node

This field corresponds to the water inlet node to the cooling coil. The water inlet node controls how a water cooling coil operates and is required for the unit ventilator that has a cooling coil associated with it to function properly.

Field: Cooling Convergence Tolerance

The convergence tolerance for the unit cooling output. This field allows the user some control over how closely the cooling coil will control the air side conditions. The relative size of this parameter relates directly to the closeness of the control. A very small value in this field will result in tight control and will probably result in larger numbers of iterations. A large value in this field will result in looser controls and could result in unsatisfactory fluctuations in supply conditions (that could in turn result in excessive iterations). Initial experience with this parameter lends to the recommendation of using 0.001 as a starting point.

The unit is controlled by matching the unit output to the zone demand. For units with water coils, the model must be numerically inverted to obtain a specified output. The cooling convergence tolerance is the error tolerance used to terminate the numerical inversion procedure. Basically this is the fraction:

$$\frac{\left|Q_{UnitVentilator,Out} - Q_{ZoneLoad}\right|}{Q_{ZoneLoad}}$$

```
UNIT VENTILATOR,
   A1 , \field name of unit ventilator
        \required-field
   A2 , \field availability schedule
        \required-field
        \type object-list
        \object-list ScheduleNames
   A3 , \field air inlet node
   A4 , \field air outlet node
   A5 , \field post-fan air node (inlet to heating coil)
   A6 , \field fan name
   N1 , \field maximum air flow rate
        \units m3/s
        \minimum> 0
        \autosizable
   A7 , \field outside air control type
        \type choice
        \key VARIABLE PERCENT
        \key FIXED TEMPERATURE
   A8 , \field Minimum Outside Air Schedule Name
        \type object-list
        \object-list ScheduleNames
        \note schedule values multiply the minimum outside air flow rate
   A9 , \field maximum outside air fraction or temperature schedule
        \note that this depends on the control type as to whether it is a fraction or temperature
        \type object-list
        \object-list ScheduleNames
   A10, \field outside air node
   A11, \field outside air relief node
   A12, \field post-"mixing box" node (inlet to coils)
   N2 , \field maximum outside air flow rate
        \units m3/s
        \minimum> 0
        \autosizable
   N3 , \field minimum outside air flow rate
        \units m3/s
        \autosizable
        \minimum 0.0
   A13, \field heating coil type
        \type choice
        \key COIL:Water:SimpleHeating
        \key COIL:Electric:Heating
        \key COIL:Gas:Heating
   A14, \field heating coil name
   N4 , \field maximum hot water flow
        \units m3/s
        \minimum> 0
        \autosizable
   N5 , \field minimum hot water flow
        \units m3/s
        \minimum 0
        \default 0
   A15, \field hot water control node
   N6 , \field Heating Convergence Tolerance
        \type real
        \Minimum> 0.0
        \Default 0.001
   A16, \field cooling coil name
   A17, \field cooling coil availability schedule
        \type object-list
        \object-list ScheduleNames
   N7 , \field maximum cold water flow
        \units m3/s
        \minimum> 0
        \autosizable
   N8 , \field minimum cold water flow
        \units m3/s
        \minimum 0
        \default 0
   A18, \field cold water control node
   N9 ; \field Cooling Convergence Tolerance
```

```
      \type real
      \Minimum> 0.0
      \Default 0.001
```

An example input for a unit ventilator, including its constituent components, is shown below.

```
UNIT VENTILATOR,
    Zone1UnitVent, ! Name
    UnitVentAvailability, ! on/off schedule
    Zone1UnitVentAirInletNode, ! air inlet node to UnitVent; also a zone exhaust node
    Zone1UnitVentAirOutletNode, ! air outlet node of UnitVent; also a zone inlet node
    Zone1UnitVentFanOutletNode, ! fan outlet node
    Zone1UnitVentFan, ! name of fan in UnitVent
    0.84, ! air flow rate in m3/s
    VARIABLE PERCENT, ! control type which varies between some max and some min schedule
    UnitVentMinOA, ! minimum outside air schedule
    UnitVentMaxOA, ! maximum outside air schedule
    Zone1UnitVentOAInNode, ! UnitVent outside air inlet node
    Zone1UnitVentExhNode, ! UnitVent relief air node
    Zone1UnitVentOAMixerOutletNode, ! mixer outlet node
    0.84,  ! outside air flow rate in m3/s
    0.168, ! min outside air flow rate in m3/s
    COIL:Water:SimpleHeating, ! heating coil type
    Zone1UnitVentHeatingCoil, ! name of heating coil in UnitVent
    0.0005, ! max hot water flow rate m3/s
    0.0, ! min hot water flow rate m3/s
    Zone1UnitVentHWInletNode, ! UnitVent hot water control node
    0.001, ! tolerance on hot water control
    Zone1UnitVentCoolingCoil, ! name of cooling coil in UnitVent
    FanAndCoilAvailSched, ! cooling coil availability schedule
    0.0010, ! max chilled water flow rate m3/s
    0.0, ! min chilled water flow rate m3/s
    Zone1UnitVentChWInletNode, ! UnitVent chilled water control node
    0.001; ! tolerance on chilled water control

FAN:SIMPLE:ConstVolume,
    Zone1UnitVentFan, ! name
    UnitVentAvailability, ! fan on/off schedule
    0.5, ! total efficiency
    75.0, ! pressure rise in Pascals (typical fan coil value)
    0.84, ! flow rate in m3/s
    0.9, ! motor efficiency
    1.0, ! motor in air stream fraction
    Zone1UnitVentOAMixerOutletNode, ! UnitVent fan inlet node
    Zone1UnitVentFanOutletNode; ! UnitVent fan outlet node

COIL:Water:SimpleCooling,
    Zone1UnitVentCoolingCoil, ! name
    FanAndCoilAvailSched, ! coil on/off schedule
    600., ! UA of coil
    0.0010, ! max water flow in m3/s
    0.9, ! leaving air relative humidity
    Zone1UnitVentChWInletNode, ! water inlet node
    Zone1UnitVentChWOutletNode, ! water outlet node
    Zone1UnitVentFanOutletNode, ! coil air inlet node
    Zone1UnitVentCCOutletNode; ! coil air outlet node

COIL:Water:SimpleHeating,
    Zone1UnitVentHeatingCoil, ! name
    FanAndCoilAvailSched, ! coil on/off schedule
    400., ! UA of coil
    0.0005, ! max water flow in m3/s
    Zone1UnitVentHWInletNode, ! water inlet node
    Zone1UnitVentHWOutletNode, ! water outlet node
    Zone1UnitVentCCOutletNode, ! coil air inlet node
    Zone1UnitVentAirOutletNode; ! coil air outlet node
```

Unit Ventilator Outputs

```
HVAC,Average,Unit Ventilator Heating Rate[W]
HVAC,Sum,Unit Ventilator Heating Energy[J]
HVAC,Average,Unit Ventilator Total Cooling Rate[W]
HVAC,Sum,Unit Ventilator Total Cooling Energy[J]
HVAC,Average,Unit Ventilator Sensible Cooling Rate[W]
HVAC,Sum,Unit Ventilator Sensible Cooling Energy[J]
HVAC,Average,Unit Ventilator Fan Electric Power[W]
HVAC,Sum,Unit Ventilator Fan Electric Consumption[J]
```

Field: Unit Ventilator Heating Rate[W]

This field reports the heating output rate of the unit ventilator system to the zone it is serving in Watts. This is determined by outlet and zone air conditions and the mass flow rate through the unit ventilator.

Field: Unit Ventilator Heating Energy[J]

This field is the heating output of the unit ventilator system to the zone it is serving in Joules over the time step being reported. This is determined by outlet and zone air conditions, the mass flow rate through the unit ventilator, and the time step.

Field: Unit Ventilator Total Cooling Rate[W]

This field reports the total cooling (sensible plus latent) output rate of the unit ventilator system to the zone it is serving in Watts. This is determined by outlet and zone air conditions and the mass flow rate through the unit ventilator.

Field: Unit Ventilator Total Cooling Energy[J]

This field is the total cooling (sensible plus latent) output of the unit ventilator system to the zone it is serving in Joules over the time step being reported. This is determined by outlet and zone air conditions, the mass flow rate through the unit ventilator, and the time step.

Field: Unit Ventilator Sensible Cooling Rate[W]

This field reports the sensible cooling output rate of the unit ventilator system to the zone it is serving in Watts. This is determined by outlet and zone air conditions and the mass flow rate through the unit ventilator.

Field: Unit Ventilator Sensible Cooling Energy[J]

This field is the sensible cooling output of the unit ventilator system to the zone it is serving in Joules over the time step being reported. This is determined by outlet and zone air conditions, the mass flow rate through the unit ventilator, and the time step.

Field: Unit Ventilator Fan Electric Power[W]

This field reports the electric power consumption rate of the fan of the unit ventilator in Watts.

Field: Unit Ventilator Fan Electric Consumption[J]

This field reports the electric power consumed by the fan of the unit ventilator over the time step in Joules.

Unit Heater

Unit heaters are zone equipment units which are assembled from other components and are a simplification of unit ventilators. They contain only a fan and a heating coil. These components are described elsewhere in this document. The unit heater input simply requires the names of these components, which have to be described elsewhere in the input. The input also requires the name of an availability schedule, maximum airflow rate, and maximum and minimum hot water volumetric flow rates. The unit is connected to the zone inlet and exhaust nodes by specifying unit inlet and outlet node names. Note that the unit air inlet node should be the same as a zone exhaust node and the unit outlet node should be the same as a zone inlet node.

While the control of the heating coil is similar to the fan coil units and the unit ventilator, the overall control of the unit heater is much different. There are four different modes in which a unit heat can operate based on the user input:

OFF: Unit is schedule off. All flow rates are set to zero and the temperatures are set to zone conditions.

NO LOAD OR COOLING/ON-OFF FAN CONTROL: Unit is available, but there is no heating load. All flow rates are set to zero and the temperatures are set to zone conditions.

NO LOAD OR COOLING/CONTINUOUS FAN CONTROL: Unit is available and the fan is running (if it is scheduled to be available also). No heating is provided, only circulation via the fan running.

HEATING: The unit is on/available and there is a heating load. The heating coil is modulated (constant fan speed) to meet the heating load.

Control of the heating coil and its flow rate is identical to the fan coil unit and unit ventilator.

Field: name of unit heater

This field is simply the identifying name that distinguishes one particular unit heater from another in the input data file. Like all other names in EnergyPlus, it is assumed that this is a unique character string and that no other unit heaters use this same name.

Field: availability schedule

This field is a schedule name (ref: Schedule) that determines whether the unit heater is available to operate. The schedule is interpreted as a digital switch. If the schedule value of the unit heater availability schedule for a particular time frame is less than or equal to zero, then the unit heater is unavailable and will not operate. For any schedule value greater than zero, the unit heater is considered available and may operate.

Field: air inlet node

This field is a node name (character string) used to identify the node that serves as the inlet (air side) to the unit heater. In EnergyPlus, nodes represent points between components or at various points in the loops. In a unit heater, the air inlet node to the system will typically be the same node as a zone outlet node. While a node name may be referenced more than once in an input data file, each node must have a unique name.

Field: air outlet node

This field is a node name (character string) used to identify the node that serves as the outlet (air side) to the unit heater. In EnergyPlus, nodes represent points between components or at various points in the loops. In a unit heater, the air outlet node from the system will typically be the same node as a zone inlet node. While a node name may be referenced more than once in an input data file, each node must have a unique name.

Field: post-fan air node

This field is a node name (character string) used to identify the node that serves as the air outlet to fan of the the unit heater. In EnergyPlus, nodes represent points between components or at various points in the loops. In a unit heater, the air outlet node from the fan is also considered the inlet node to the coils. While a node name may be referenced more than once in an input data file, each node must have a unique name.

Field: fan name

This field is the name (character string) of a fan (ref: FAN:SIMPLE:ConstantVolume, FAN:SIMPLE:VariableVolume) that is part of the unit heater system. This name links the unit heater to particular fan data entered elsewhere in the input data file. A fan name is required since it is the prime mover of air in the unit heater system.

Field: maximum air flow rate

This field allows the user to enter the maximum volumetric flow rate of air through the unit heater system in m^3/s. This parameter should be some real number greater than zero.

Field: fan control type

This field allows the user to define how the unit heater will operate under “no load” or cooling conditions. The user may select from two options. If the “ONOFF” control is selected, then the fan will not run unless there is a heating load. If the fan does not run, this effectively shuts the unit heater system off (there is no option to simply run the heating coil and allow natural convection to transfer heat from the unit to the zone). If the “CONTINUOUS” control is selected, then the fan will always run if the unit heater is available. This will produce air movement in the zone but also add some amount of heat to the energy balance since the fan will generate some heat. For more information on controlling the operation of the unit heater, see the general description given above.

Field: heating coil type

This field is the type of coil (ref: COIL:Water:SimpleHeating, COIL:Electric:Heating, COIL:Gas:Heating) that is used for heating in the unit heater system. This field must be one of the three following three keywords: COIL:Water:SimpleHeating, COIL:Electric:Heating, COIL:Gas:Heating. It is used in conjunction with the heating coil name (see next field) to specify the heating coil present within the system.

Field: heating coil name

This field is the name (character string) of the heating coil (ref: COIL:Water:SimpleHeating, COIL:Electric:Heating, COIL:Gas:Heating) that is part of the unit heater system. It is assumed that there is always some sort of heating coil associated with a unit heater system. This name links the unit ventilator to particular heating coil data entered elsewhere in the input data file.

Field: maximum hot water flow

This field allows the user to enter a maximum volumetric flow rate of water through a water heating coil in m^3/sec. This number should be some number greater than zero and greater than the minimum hot water volumetric flow rate (see next field). Note that this parameter has no meaning for either an electric or a gas heating coil.

Field: minimum hot water flow

This field allows the user to enter a minimum volumetric flow rate of water through a water heating coil in m^3/sec. This number should be some number greater than zero and less than

the maximum hot water volumetric flow rate (see previous field). Note that this parameter has no meaning for either an electric or a gas heating coil.

Field: hot water control node

This field corresponds to the water inlet node to the heating coil for a water coil. The water inlet node controls how a water heating coil operates and is required for the unit ventilator to function properly. This field is ignored for gas and electric heating coils.

Field: Heating Convergence Tolerance

The convergence tolerance for the unit heating output. This field allows the user some control over how closely the heating coil will control the air side conditions. The relative size of this parameter relates directly to the closeness of the control. A very small value in this field will result in tight control and will probably result in larger numbers of iterations. A large value in this field will result in looser controls and could result in unsatisfactory fluctuations in supply conditions (that could in turn result in excessive iterations). Initial experience with this parameter lends to the recommendation of using 0.001 as a starting point. This field is ignored for gas and electric heating coils.

The unit is controlled by matching the unit output to the zone demand. For units with water coils, the model must be numerically inverted to obtain a specified output. The heating convergence tolerance is the error tolerance used to terminate the numerical inversion procedure. Basically this is the fraction:

$$\square(Q_{\text{unit heater, out}} - Q_{\text{zone load}})\square \; / \; Q_{\text{zone load}}$$

The IDD definition for the Unit Heater follows:

```
UNIT HEATER,
   A1 , \field name of unit heater
   A2 , \field availability schedule
        \type object-list
        \object-list ScheduleNames
   A3 , \field air inlet node
   A4 , \field air outlet node
   A5 , \field fan name
   N1 , \field maximum air flow rate
        \units m3/s
        \minimum> 0
   A6 , \field fan control type
        \type choice
        \key ONOFF
        \key CONTINUOUS
   A7 , \field post-fan air node (inlet to heating coil)
   A8 , \field heating coil type
        \type choice
        \key COIL:Water:SimpleHeating
        \key COIL:Electric:Heating
        \key COIL:Gas:Heating
   A9 , \field heating coil name
   N2 , \field maximum hot water flow
        \units m3/s
        \minimum> 0
   N3 , \field minimum hot water flow
        \units m3/s
        \minimum 0
   A10 , \field hot water control node
   N4 ; \field Heating Convergence Tolerance
        \type real
        \Minimum> 0.0
        \Default 0.001
```

An example input for a unit heater, including its constituent components, is shown below.

```
UNIT HEATER,
    Zone1UnitHeat, ! Name
    UnitHeatAvailability, ! on/off schedule
    Zone1UnitHeatAirInletNode, ! UnitHeat air inlet node/zone exhaust node
    Zone1UnitHeatAirOutletNode, ! UnitHeat air outlet node/zone inlet node
    Zone1UnitHeatFan, ! name of fan in UnitHeat
    0.84, ! air flow rate in m3/s
    CONTINUOUS, ! fan control type
    Zone1UnitHeatFanOutletNode, !fan outlet node
    COIL:Water:SimpleHeating, ! type of coil
    Zone1UnitHeatHeatingCoil, ! name of heating coil in UnitHeat
    0.0005, ! max hot water flow rate m3/s
    0.0, ! min hot water flow rate m3/s
    Zone1UnitHeatHWInletNode, ! UnitHeat hot water control node
    0.001; ! tolerance on hot water control

FAN:SIMPLE:ConstVolume,
    Zone1UnitHeatFan, ! name
    UnitHeatAvailability, ! fan on/off schedule
    0.5, ! total efficiency
    75.0, ! pressure rise in Pascals (typical fan coil value)
    0.84, ! flow rate in m3/s
    0.9, ! motor efficiency
    1.0, ! motor in air stream fraction
    Zone1UnitHeatAirInletNode, ! UnitHeat fan inlet node
    Zone1UnitHeatFanOutletNode; ! UnitHeat fan outlet node

COIL:Water:SimpleHeating,
    Zone1UnitHeatHeatingCoil, ! name
    FanAndCoilAvailSched, ! coil on/off schedule
    400., ! UA of coil
    0.0005, ! max water flow in m3/s
    Zone1UnitHeatHWInletNode, ! water inlet node
    Zone1UnitHeatHWOutletNode, ! water outlet node
    Zone1UnitHeatFanOutletNode, ! coil air inlet node
    Zone1UnitHeatAirOutletNode; ! coil air outlet node
```

Unit Heater Outputs

```
HVAC,Average,Unit Heater Heating Rate[W]
HVAC,Sum,Unit Heater Heating Energy[J]
HVAC,Average,Unit Heater Fan Electric Power[W]
HVAC,Sum,Unit Heater Fan Electric Consumption[J]
```

Field: Unit Heater Heating Rate[W]

This field reports the heating output rate of the unit heater system to the zone it is serving in Watts. This is determined by outlet and zone air conditions and the mass flow rate through the unit heater.

Field: Unit Heater Heating Energy[J]

This field is the heating output of the unit heater system to the zone it is serving in Joules over the time step being reported. This is determined by outlet and zone air conditions, the mass flow rate through the unit heater, and the time step.

Field: Unit Heater Fan Electric Power[W]

This field reports the electric power consumption rate of the fan of the unit heater in Watts.

Field: Unit Heater Fan Electric Consumption[J]

This field reports the electric power consumed by the fan of the unit heater over the time step in Joules.

Furnace and Unitary Systems

The components

FURNACE:BLOWTHRU:HEATONLY

FURNACE:BLOWTHRU:HEATCOOL

UNITARYSYSTEM:BLOWTHRU:HEATONLY

UNITARYSYSTEM:BLOWTHRU:HEATCOOL

UNITARYSYSTEM:HEATPUMP:AIRTOAIR

are compound components usually placed in the primary air loop as the sole component. On the zone equipment side they are usually connected to one or more zones through Direct Air objects. For this system to work correctly it is important that the maximum or design air flow rate through the furnace or unitary system be set exactly equal to the sum of the maximum air flow rates through the direct air objects.

Furnace:BlowThru:HeatOnly

The EnergyPlus blowthru furnace is a “virtual” component that consists of an ON-OFF fan component and a GAS or ELECTRIC heating coil component as shown in the Figure below.

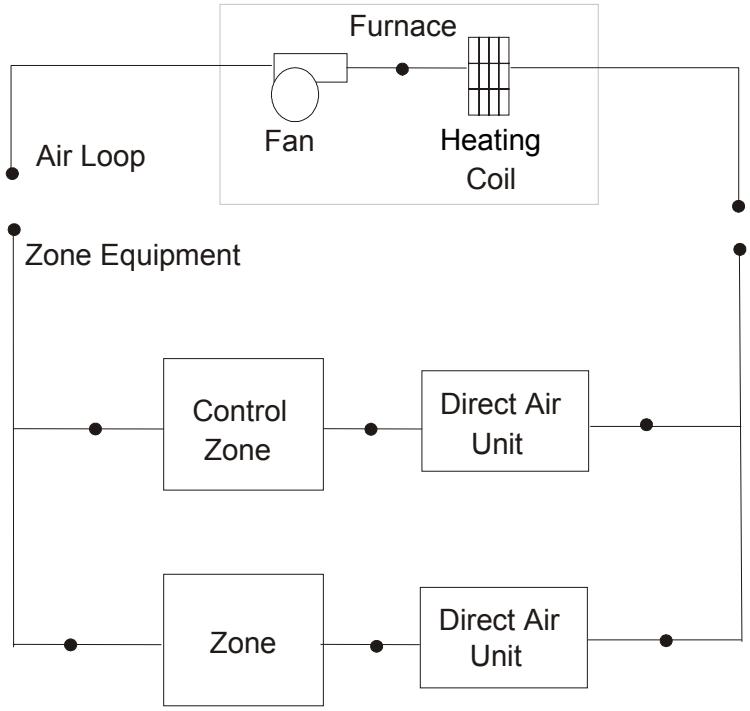

Figure 58. Schematic of EnergyPlus Furnace Model

Links to the fan and heating coil specifications are provided in the furnace input data syntax. In addition the control zone name, the fraction of the total furnace air flow delivered to the

control zone and furnace design operating conditions are specified by the furnace syntax as shown in the Energy+.idd specification below.

```
FURNACE:BLOWTHRU:HEATONLY,
   \min-fields 15
   A1 , \field Name of furnace
        \required-field
   A2 , \field Availability schedule
        \required-field
        \type object-list
        \object-list ScheduleNames
   A3 , \field Furnace inlet node name
        \required-field
   A4 , \field Furnace outlet node name
        \required-field
   A5 , \field Operating Mode
        \required-field
        \type choice
        \key CycFanCycCoil
        \key ContFanCycCoil
   N1,  \field Furnace heating capacity
        \required-field
        \note  Should match heating coil output
        \units W
        \autosizable
   N2,  \field Maximum supply air temperature from furnace heater
        \units C
        \autosizable
        \default 80
   N3,  \field Design air flow rate through the furnace
        \required-field
        \note  Needs to match fan size
        \units m3/s
        \autosizable
   A6,  \field Controlling zone or thermostat location
        \required-field
        \object-list ZoneNames
   N4,  \field Fraction of the total or design volume flow that goes through the controlling zone
        \required-field
        \minimum> 0
        \maximum 1
        \autosizable
   A7,  \field Supply fan type
        \required-field
        \type choice
        \key FAN:SIMPLE:ONOFF
        \note  Only works with ON/OFF Fan
   A8,  \field Supply fan name
        \required-field
   A9,  \field Fan outlet node
        \required-field
        \note  Needs to match in the fan object
   A10, \field Heating coil type
        \required-field
        \type choice
        \key COIL:GAS:HEATING
        \key COIL:ELECTRIC:HEATING
        \note  Only works with gas and electric coils
   A11; \field Heating coil name
        \required-field
```

Field: Name of furnace

This alpha field contains the identifying name for the furnace.

Field: Availability schedule

This alpha field contains the schedule name which contains information on the availability of the furnace to operate.

Field: Furnace inlet node name

This alpha field contains the furnace inlet node name.

Field: Furnace outlet node name

This alpha field contains the furnace outlet node name.

Field: Operating Mode

This input field has two choices: CycFanCycCoil or ContFanCycCoil. The first choice stands for "cycling fan cycling coil". This means that the furnace supply air fan and heating coil cycle on and off together to meet the heating load (a.k.a. AUTO fan). The second choice stands for "continuous fan cycling coil". The supply fan runs continuously while the heating coil cycles to meet the heating load.

Field: Furnace heating capacity

This numeric field contains the furnace heating capacity in Watts. This capacity should match the specified furnace heating coil output.

Field: Maximum supply air temperature from furnace heater

This numeric field contains the design operating furnace air outlet temperature in degrees C when the furnace is heating. If this input field is left blank, the default value is 80 C.

Field: Design air flow rate through the furnace

This numeric field contains the design volumetric flow rate of the furnace in cubic meters per second. This volumetric flow rate should match the flow rate specified for the furnace fan.

Field: Controlling zone or thermostat location

This alpha field contains the identifying zone name where the thermostat controlling the furnace is located.

Field: Fraction of the total or design volume flow that goes through the controlling zone

This numeric field contains the fraction (>0 to 1) of the total furnace volumetric flow rate that is supplied to the zone with the furnace thermostat.

Field: Supply fan type

This alpha field contains the identifying type of fan specified in the furnace. Fan type must be FAN:SIMPLE:ONOFF.

Field: Supply fan name

This alpha field contains the identifying name given to the furnace fan.

Field: Fan outlet node

This alpha field contains the identifying name given to the furnace fan outlet node, as specified in the fan object.

Field: Heating coil type

This alpha field contains the identifying type of heating coil specified in the furnace. Heating coil type must be COIL:GAS:HEATING or COIL:ELECTRIC:HEATING.

Field: Heating coil name

This alpha field contains the identifying name given to the furnace heating coil.

As shown in the example below, correct specification of the furnace requires specification of the following objects in addition to the furnace object:

1. ON-OFF fan
2. heating coil
3. direct air unit for each zone served by furnace

It should be noted that the volumetric air flow rate specified in the direct air unit for the controlling zone should properly reflect the fractional volumetric air flow rate specified in the furnace object.

```
FURNACE:BLOWTHRU:HEATONLY, Gas Furnace 1,
      FanAndCoilAvailSched,                       ! Availability schedule name
      Air Loop Inlet Node, Air Loop Outlet Node,  ! Furnace inlet and outlet air nodes
      CycFanCycCoil,  ! Operation mode - cycling supply air fan, cycling coil
      20000,          ! Furnace heating capacity - should match heating coil output [W]
      80,             ! Maximum supply air temperature from furnace heater [C]
      1.3,            ! Design air flow rate through the furnace [m^3/s] - Needs to match fan size
      East Zone,      ! Controlling zone or thermostat location
      0.276923,       ! Fraction of the volume flow that goes through the controlling zone
      FAN:SIMPLE:ONOFF, Supply Fan 1,  ! Supply fan type and name
      Heating Coil Air Inlet Node,     ! Fan outlet node and needs to match in the fan object
      COIL:GAS:HEATING, Furnace Coil;  ! Heating coil type and name

   COIL:Gas:Heating,
      Furnace Coil,          ! Name of heating coil
      FanAndCoilAvailSched,  ! Coil Schedule
      0.8,                   ! Gas Burner Efficiency of the Coil
      20000,                 ! Nominal Capacity of the Coil [W]
      Heating Coil Air Inlet Node, Air Loop Outlet Node;     ! Coil Air Side Inlet & Outlet Node

   FAN:SIMPLE:ONOFF,
      Supply Fan 1,             !Fan Name
      FanAndCoilAvailSched,     !Fan Schedule
      0.7,                      !Fan Efficiency
      600.0,                    !Delta Pressure [N/M^2]
      1.3,                      !Max Vol Flow Rate  [m^3/Sec]
      0.9,                      !motor efficiency
      1.0,                      !motor in air stream fraction
      Air Loop Inlet Node, Heating Coil Air Inlet Node,      !Inlet Node, Outlet Node
      , ; cooling part-load factor modifier curve, heating part-load factor modifier curve (not used)

    DIRECT AIR,
        Zone1DirectAir,
        FanAndCoilAvailSched,
        Zone 1 Inlet Node,
        0.47;

    DIRECT AIR,
        Zone2DirectAir,
        FanAndCoilAvailSched,
        Zone 2 Inlet Node,
        0.36;

    DIRECT AIR,
        Zone3DirectAir,
        FanAndCoilAvailSched,
        Zone 3 Inlet Node,
        0.47;
```

Example of Heat-Only Furnace Specification

Furnace:BlowThru:HeatOnly Outputs

```
HVAC,Average,Furnace Fan Part-Load Ratio
```

Field: Furnace Fan Part-Load Ratio

This output variable is the ratio of actual air mass flow rate through the furnace to the furnace's design air mass flow rate (i.e., design volumetric flow rate converted to dry air mass flow rate). For continuous fan mode (ContFanCycCoil), this variable is always 1.0 when the furnace is available (based on the availability schedule). For cycling fan/cycling coil mode (CycFanCycCoil), the actual air mass flow rate is calculated based on the ratio of the sensible heating load to the furnace heating capacity. For the cycling fan mode, the runtime fraction for the furnace fan may be different from the fan part-load ratio reported here due the part-load performance of the furnace's heating coil (delay at start-up to reach steady-state heating output). In general, runtime fractions are reported by individual components where appropriate (e.g., Fan:Simple:OnOff).

Furnace:BlowThru:HeatCool

The blowthru heat/cool furnace is a "virtual" component that consists of an ON-OFF fan component, a GAS or ELECTRIC heating coil component, and a DX cooling coil component as shown in Figure 59 below. If the high humidity control option is selected, a reheat coil component is also required and the furnace's configuration when specifying this option is shown in Figure 60. Schematic of Blow Thru Furnace with High Humidity Control below.

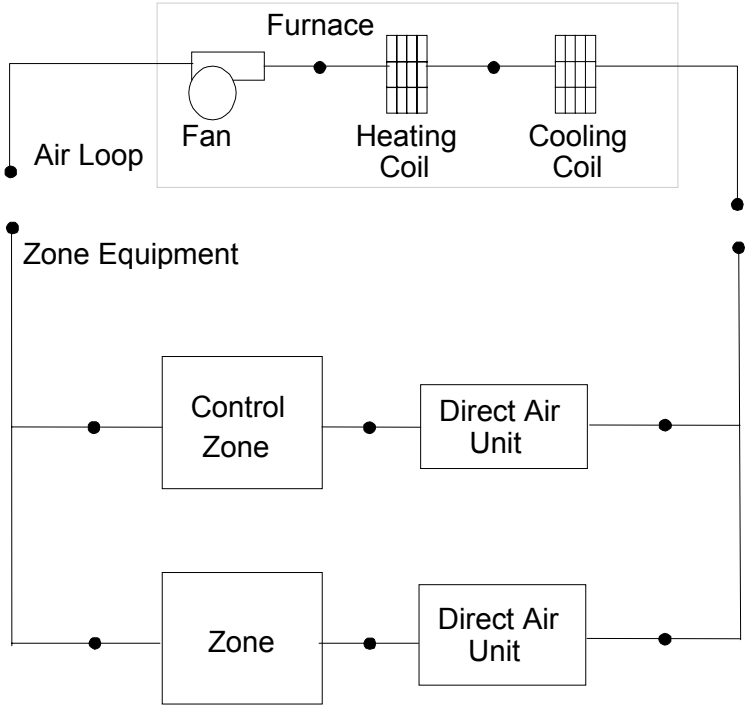

Figure 59. Schematic of EnergyPlus Heat/Cool Furnace

Links to the fan, heating coil, DX cooling coil and optional reheat coil specifications are provided in the furnace input data syntax. In addition the control zone name, the fraction of

the total furnace air flow delivered to the control zone and furnace design operating conditions are specified by the furnace syntax as shown in the Energy+.idd specification below.

```
FURNACE:BLOWTHRU:HEATCOOL,
   \min-fields 21
   A1,  \field Name of furnace
        \required-field
   A2,  \field Availability schedule
        \required-field
        \type object-list
        \object-list ScheduleNames
   A3,  \field Furnace inlet node name
        \required-field
   A4,  \field Furnace outlet node name
        \required-field
   A5,  \field Operating Mode
        \required-field
        \type choice
        \key CycFanCycCoil
        \key ContFanCycCoil
   N1,  \field Furnace heating capacity
        \required-field
        \note  Should match heating coil output
        \units W
        \autosizable
   N2,  \field Maximum supply air temperature from furnace heater
        \units C
        \autosizable
        \default 80
   N3,  \field Design air flow rate through the furnace
        \required-field
        \note  Needs to match fan size
        \units m3/s
        \autosizable
   A6,  \field Controlling zone or thermostat location
        \required-field
        \object-list ZoneNames
   N4,  \field Fraction of the total or design volume flow that goes through the controlling zone
        \required-field
        \minimum> 0
        \maximum 1
        \autosizable
   A7,  \field Supply fan type
        \required-field
        \type choice
        \key FAN:SIMPLE:ONOFF
        \note  Only works with ON/OFF Fan
   A8,  \field Supply fan name
        \required-field
   A9,  \field Fan outlet node
        \required-field
        \note  Needs to match in the fan object
```

```
A10, \field Heating coil type
     \required-field
     \type choice
     \key COIL:GAS:HEATING
     \key COIL:ELECTRIC:HEATING
     \note  Only works with gas and electric coils
A11, \field Heating coil name
     \required-field
A12, \field Heating coil inlet node
     \required-field
     \note  Needs to match in the heating coil object
A13, \field Cooling coil type
     \required-field
     \type choice
     \key COIL:DX:CoolingBypassFactorEmpirical
     \note  Only works with DX cooling coil
A14, \field Cooling coil name
     \required-field
A15; \field Cooling coil inlet node
     \required-field
     \note  Needs to match in the cooling coil object
N5,  \field Cooling convergence tolerance
     \type real
     \Minimum> 0.0
     \Default 0.001
A16, \field High humidity control
     \type choice
     \key Yes
     \key No
     \default No
     \note  Humidity setpoint from ZONE CONTROL:HUMIDISTAT object
A17, \field Reheat coil type
     \type choice
     \key COIL:GAS:HEATING
     \key COIL:ELECTRIC:HEATING
     \note  Only required if high humidity control input field is "Yes"
     \note  Only works with gas and electric coils
A18, \field Reheat coil name
     \note Only required if high humidity control input field is "Yes"
A19; \field Reheat coil inlet node
     \note Only required if high humidity control input field is "Yes"
     \note  Needs to match in the heating (reheat) coil object
```

Field: Name of furnace

This alpha field contains the identifying name for the furnace.

Field: Availability schedule

This alpha field contains the schedule name which contains information on the availability of the furnace to operate.

Field: Furnace inlet node name

This alpha field contains the furnace inlet node name.

Field: Furnace outlet node name

This alpha field contains the furnace outlet node name.

Field: Operating Mode

This input field has two choices: CycFanCycCoil or ContFanCycCoil. The first choice stands for "cycling fan cycling coil". This means that the furnace supply air fan and the heating or cooling coil cycle on and off together to meet the heating or cooling load (a.k.a. AUTO fan). The second choice stands for "continuous fan cycling coil". The supply fan runs continuously while the heating or cooling coil cycles to meet the load.

Field: Furnace heating capacity

This numeric field contains the furnace heating capacity in Watts. This capacity should match the specified furnace heating coil output.

Field: Maximum supply air temperature from furnace heater

This numeric field contains the design operating furnace air outlet temperature in degrees C when the furnace is heating. If this input field is left blank, the default value is 80 C.

Field: Design air flow rate through the furnace

This numeric field contains the design volumetric flow rate of the furnace in cubic meters per second. This volumetric flow rate should match the flow rate specified for the furnace fan.

Field: Controlling zone or thermostat location

This alpha field contains the identifying zone name where the thermostat controlling the furnace is located.

Field: Fraction of the total or design volume flow that goes through the controlling zone

This numeric field contains the fraction (>0 to 1) of the total furnace volumetric flow rate that is supplied to the zone with the furnace thermostat.

Field: Supply fan type

This alpha field contains the identifying type of fan specified in the furnace. Fan type must be FAN:SIMPLE:ONOFF.

Field: Supply fan name

This alpha field contains the identifying name given to the furnace fan.

Field: Fan outlet node

This alpha field contains the identifying name given to the furnace fan outlet node, as specified in the fan object.

Field: Heating coil type

This alpha field contains the identifying type of heating coil specified in the furnace. Heating coil type must be COIL:GAS:HEATING or COIL:ELECTRIC:HEATING.

Field: Heating coil name

This alpha field contains the identifying name given to the furnace heating coil.

Field: Heating coil inlet node

This alpha field contains the identifying name given to the furnace heating coil inlet node, as specified in the heating coil object.

Field: Cooling coil type

This alpha field contains the identifying type of cooling coil specified in the furnace. Cooling coil type must be COIL:DX:CoolingBypassFactorEmpirical.

Field: Cooling coil name

This alpha field contains the identifying name given to the furnace cooling coil.

Field: Cooling coil inlet node

This alpha field contains the identifying name given to the furnace cooling coil inlet node, as specified in the cooling coil object.

Field: Cooling convergence tolerance

This numeric field defines the convergence tolerance for the unit's cooling output. This field allows the user some control over how closely the furnace will control the air-side conditions. The relative size of this parameter relates directly to the closeness of the control. A very small value in this field will result in tight control and will probably result in larger numbers of iterations. A large value in this field will result in looser controls and could result in unsatisfactory fluctuations in zone air temperature. Initial experience with this parameter lends to the recommendation of using 0.001 as the starting point.

The furnace is controlled by matching its sensible (temperature) cooling output to the zone sensible load (demand). Because the performance of the DX cooling coil is frequently non-linear, the furnace model must call the DX coil model several times (iterate) to determine the proper run time fraction to meet the zone load. The cooling convergence tolerance is the error tolerance used to terminate the iteration procedure when the following equation is satisfied:

$$\frac{\left|(Q_{ZoneLoad} - Q_{furnace,out})\right|}{Q_{ZoneLoad}} \leq CoolingConvergenceTolerance$$

The maximum number of iterations is currently limited to 15, with a warning message generated if the above equation is not satisfied within the maximum number of iterations.

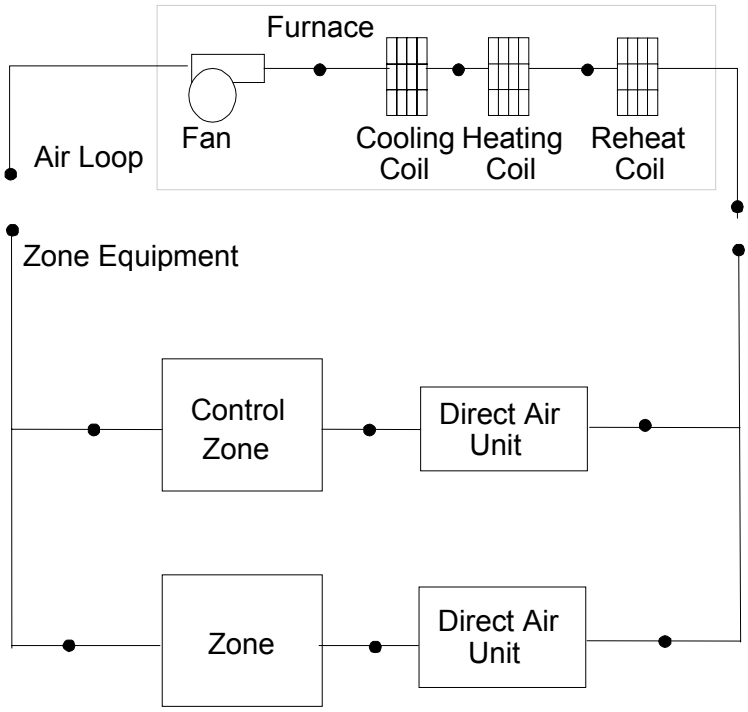

Figure 60. Schematic of Blow Thru Furnace with High Humidity Control

Field: High humidity control

This input field has two choices: Yes or No. High humidity control denotes the use of the cooling coil and a reheat coil to keep the control zone from exceeding a relative humidity set point. If high humidity control is specified ('Yes'), then three additional inputs (reheat coil type, name and inlet node) are also required as shown below. The relative humidity set point is specified in the object ZONE CONTROL:HUMIDISTAT.

Field: Reheat coil type

This alpha field contains the identifying type of reheat coil specified in the furnace. Reheat coil type must be COIL:GAS:HEATING or COIL:ELECTRIC:HEATING.

Field: Reheat coil name

This alpha field contains the identifying name given to the furnace reheat coil.

Field: Reheat coil inlet node

This alpha field contains the identifying name given to the furnace reheat coil inlet node, as specified in the heating (reheat) coil object.

As shown in the example below, correct specification of the heat/cool furnace requires specification of the following objects in addition to the furnace object:

1. ON-OFF fan
2. heating coil
3. cooling coil

4. reheat coil (optional)
5. direct air unit for each zone served by the furnace

It should be noted that the volumetric air flow rate specified in the direct air unit for the controlling zone should properly reflect the fractional volumetric air flow rate specified in the furnace object. In addition, the DX cooling coil operation mode must be specified consistently with the furnace operating mode (e.g., with CycFanCycCoil for Furnace operating mode, the DX cooling coil operation mode must be CycFanCycComp).

```
FURNACE:BLOWTHRU:HEATCOOL, GasHeat DXAC Furnace 1,    ! Furnace name
      FanAndCoilAvailSched,                           ! Availability schedule name
      Air Loop Inlet Node, Air Loop Outlet Node,      ! Furnace inlet and outlet air nodes
      CycFanCycCoil,  ! Furnace operating mode - must match DX cooling coil operating mode
      25000,          ! Furnace heating capacity - should match heating coil output[W]
      80,             ! Maximum supply air temperature from furnace heater [C]
      1.3,            ! Design air flow rate through the furnace [m^3/s] - Needs to match fan size
      East Zone,      ! Controlling zone or thermostat location
      0.276923,       ! Fraction of the volume flow that goes through the controlling zone
      FAN:SIMPLE:ONOFF, Supply Fan 1,   ! Supply fan type and name
      Heating Coil Air Inlet Node,      ! Fan outlet node and needs to match in the fan object
      COIL:GAS:HEATING, Furnace Heating Coil 1, ! Heating coil type and name
      Heating Coil Air Inlet Node, ! Heating coil inlet node, needs to match in heating coil object
      COIL:DX:CoolingBypassFactorEmpirical, Furnace ACDXCoil 1, ! Cooling coil type and name
      DX Cooling Coil Air Inlet Node, ! Cooling coil inlet node, needs to match in cooling coil object
      0.001,                          ! Cooling convergence tolerance
      No;                             ! High humidity control (Yes/No)


   COIL:GAS:HEATING,
      Furnace Heating Coil 1, ! Name of heating coil
      FanAndCoilAvailSched,   ! Coil Schedule
      0.8,                    ! Gas Burner Efficiency of the Coil
      25000,                  ! Nominal Capacity of the Coil [W]
      Heating Coil Air Inlet Node, DX Cooling Coil Air Inlet Node; ! Coil Air Side Inlet & Outlet Node

   COIL:DX:CoolingBypassFactorEmpirical,
      Furnace ACDXCoil 1,             ! Name of cooling coil
      FanAndCoilAvailSched,           ! Coil Schedule
      25000,                          ! Rated total cooling capacity [W]
      0.75,                           ! Rated sensible heat ratio
      3.0,                            ! Rated COP
      1.3,                            ! Rated air flow rate [m3/s]
      DX Cooling Coil Air Inlet Node, ! Coil air inlet node
      Air Loop Outlet Node,        ! Coil air outlet node
      WindACCoolCapFT,             ! Cooling capacity modifier curve (temperature,C)
      WindACCoolCapFFF,            ! Cooling capacity modifier curve (flow fraction)
      WindACEIRFT,                 ! Energy input ratio modifier curve (temperature,C)
      WindACPLFFPLR,               ! Energy input ratio modifier curve (flow fraction)
      CycFanCycComp;               ! Operation mode (cycling fan, cycling compressor)
```

```
FAN:SIMPLE:ONOFF,
   Supply Fan 1,         !Fan Name
   FanAndCoilAvailSched, !Fan Schedule
   0.7,                  !Fan Efficiency
   600.0,                !Delta Pressure [N/M^2]
   1.3,                  !Max Vol Flow Rate  [m^3/Sec]
   0.9,                  !motor efficiency
   1.0,                  !motor in air stream fraction
   Air Loop Inlet Node, Heating Coil Air Inlet Node,  !Inlet Node, Outlet Node
   WindACPLFFPLR,        ! cooling part-load factor modifier curve
   ;                     ! heating part-load factor modifier curve (not used)

 DIRECT AIR,
     Zone1DirectAir,
     FanAndCoilAvailSched,
     Zone 1 Inlet Node,
     0.47;
 DIRECT AIR,
     Zone2DirectAir,
     FanAndCoilAvailSched,
     Zone 2 Inlet Node,
     0.36;
 DIRECT AIR,
     Zone3DirectAir,
     FanAndCoilAvailSched,
     Zone 3 Inlet Node,
     0.47;
```

Example of Heat/Cool Furnace Specification

Furnace:BlowThru:HeatCool Outputs

```
HVAC,Average,Furnace Fan Part-Load Ratio
HVAC,Average,Furnace Compressor Part-Load Ratio
```

Field: Furnace Fan Part-Load Ratio

This output variable is the ratio of actual air mass flow rate through the furnace to the furnace's design air mass flow rate (i.e., design volumetric flow rate converted to dry air mass flow rate). For continuous fan mode (ContFanCycCoil), this variable is always 1.0 when the furnace is available (based on the availability schedule). For cycling fan/cycling coil mode (CycFanCycCoil), the actual air mass flow rate is calculated based on the ratio of the sensible heating (or cooling) load to the steady-state furnace heating (or cooling) capacity. For the cycling fan mode, the runtime fraction for the furnace fan may be different from the fan part-load ratio reported here due the part-load performance of the furnace's heating (or cooling) coil (delay at start-up to reach steady-state output). In general, runtime fractions are reported by individual components where appropriate (e.g., Fan:Simple:OnOff).

Field: Furnace Compressor Part-Load Ratio

This output variable is the ratio of the sensible cooling load to the steady-state cooling capacity of the furnace's DX cooling coil. For the cycling fan mode, the runtime fraction for the DX cooling coil compressor may be different from the compressor part-load ratio reported here due the part-load performance of the cooling coil (delay at start-up to reach steady-state output). In general, runtime fractions are reported by individual components where appropriate.

UnitarySystem:BlowThru:HeatOnly

The UnitarySystem:BlowThru:HeatOnly is identical to the Furnace:BlowThru:HeatOnly model. The blowthru, heat-only unitary system is a "virtual" component that consists of an ON-OFF fan component and a GAS or ELECTRIC heating coil component as shown in the Figure below.

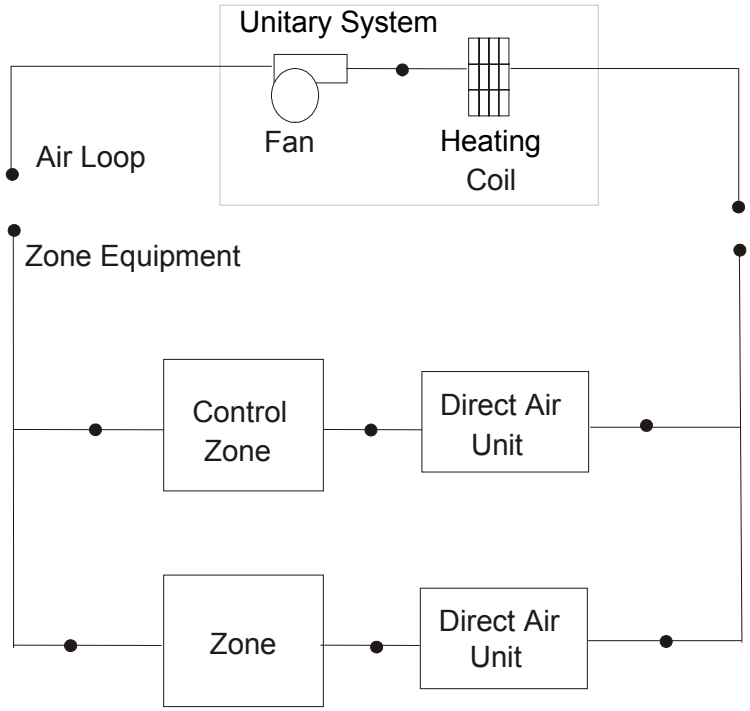

Figure 61. Schematic of EnergyPlus Heat-Only Unitary System

Links to the fan and heating coil specifications are provided in the unitary system input data syntax. In addition the control zone name, the fraction of the total unitary system air flow delivered to the control zone and unitary system design operating conditions are specified by the unitary system syntax as shown in the Energy+.idd specification below.

```
UNITARYSYSTEM:BLOWTHRU:HEATONLY,
   \min-fields 15
   A1,  \field Name of unitary system
        \required-field
   A2,  \field Availability schedule
        \required-field
        \type object-list
        \object-list ScheduleNames
   A3,  \field Unitary system inlet node name
        \required-field
   A4,  \field Unitary system outlet node name
        \required-field
   A5,  \field Operating Mode
        \required-field
        \type choice
        \key CycFanCycCoil
        \key ContFanCycCoil
   N1,  \field Unitary system heating capacity
        \required-field
        \note  Should match heating coil output
        \units W
        \autosizable
   N2,  \field Maximum supply air temperature from unitary system heater
        \units C
        \autosizable
        \default 80
   N3,  \field Design air flow rate through the unitary system
        \required-field
        \note  Needs to match fan size
        \units m3/s
        \autosizable
   A6,  \field Controlling zone or thermostat location
        \required-field
        \object-list ZoneNames
   N4,  \field Fraction of the total or design volume flow that goes through the controlling zone
        \required-field
        \minimum> 0
        \maximum 1
        \autosizable
   A7,  \field Supply fan type
        \required-field
        \type choice
        \key FAN:SIMPLE:ONOFF
        \note  Only works with ON/OFF Fan
   A8,  \field Supply fan name
        \required-field
   A9,  \field Fan outlet node
        \required-field
        \note  Needs to match in the fan object
   A10, \field Heating coil type
        \required-field
        \type choice
        \key COIL:GAS:HEATING
        \key COIL:ELECTRIC:HEATING
        \note  Only works with gas and electric coils
   A11; \field Heating coil name
        \required-field
```

Field: Name of unitary system

This alpha field contains the identifying name for the unitary system.

Field: Availability schedule

This alpha field contains the schedule name which contains information on the availability of the unitary system to operate.

Field: Unitary system inlet node name

This alpha field contains the unitary system inlet node name.

Field: Unitary system outlet node name

This alpha field contains the unitary system outlet node name.

Field: Operating Mode

This input field has two choices: CycFanCycCoil or ContFanCycCoil. The first choice stands for "cycling fan cycling coil". This means that the unitary system supply air fan and heating coil cycle on and off together to meet the heating load (a.k.a. AUTO fan). The second choice stands for "continuous fan cycling coil". The supply fan runs continuously while the heating coil cycles to meet the heating load.

Field: Unitary system heating capacity

This numeric field contains the system heating capacity in Watts. This capacity should match the specified unitary system heating coil output.

Field: Maximum supply air temperature from unitary system heater

This numeric field contains the design air outlet temperature in degrees C when the unitary system is heating. If this input field is left blank, the default value is 80 C.

Field: Design air flow rate through the unitary system

This numeric field contains the design volumetric flow rate of the unitary system in cubic meters per second. This volumetric flow rate should match the flow rate specified for the unitary system fan.

Field: Controlling zone or thermostat location

This alpha field contains the identifying zone name where the thermostat controlling the unitary system is located.

Field: Fraction of the total or design volume flow that goes through the controlling zone

This numeric field contains the fraction (>0 to 1) of the total system volumetric flow rate that is supplied to the zone with the unitary system thermostat.

Field: Supply fan type

This alpha field contains the identifying type of fan specified in the unitary system. Fan type must be FAN:SIMPLE:ONOFF.

Field: Supply fan name

This alpha field contains the identifying name given to the unitary system fan.

Field: Fan outlet node

This alpha field contains the identifying name given to the unitary system fan outlet node, as specified in the fan object.

Field: Heating coil type

This alpha field contains the identifying type of heating coil specified in the unitary system. Heating coil type must be COIL:GAS:HEATING or COIL:ELECTRIC:HEATING.

Field: Heating coil name

This alpha field contains the identifying name given to the unitary system heating coil.

As shown in the example below, correct specification of the heat-only unitary system requires specification of the following objects in addition to the unitary system object:

1. ON-OFF fan
2. heating coil
3. direct air unit for each zone served by unitary system

It should be noted that the volumetric air flow rate specified in the direct air unit for the controlling zone should properly reflect the fractional volumetric air flow rate specified in the unitary system object.

```
UNITARYSYSTEM:BLOWTHRU:HEATONLY, Gas Unitary System 1,   ! Unitary system name
      FanAndCoilAvailSched,                              ! Availability schedule name
      Air Loop Inlet Node, Air Loop Outlet Node,  ! Unitary System inlet and outlet air nodes
      CycFanCycCoil,  ! Operation mode - cycling supply air fan, cycling coil
      20000,          ! Unitary System heating capacity - should match heating coil output [W]
      80,             ! Maximum supply air temperature from unitary system heater [C]
      1.3,            ! Design air flow rate through the system [m^3/s] - Needs to match fan size
      East Zone,      ! Controlling zone or thermostat location
      0.276923,       ! Fraction of the volume flow that goes through the controlling zone
      FAN:SIMPLE:ONOFF, Supply Fan 1,  ! Supply fan type and name
      Heating Coil Air Inlet Node,     ! Fan outlet node and needs to match in the fan object
      COIL:GAS:HEATING, Unitary System Heating Coil;  ! Heating coil type and name

   COIL:Gas:Heating,
      Unitary System Heating Coil,  ! Name of heating coil
      FanAndCoilAvailSched,         ! Coil Schedule
      0.8,                          ! Gas Burner Efficiency of the Coil
      20000,                        ! Nominal Capacity of the Coil [W]
      Heating Coil Air Inlet Node, Air Loop Outlet Node;     ! Coil Air Side Inlet & Outlet Node

   FAN:SIMPLE:ONOFF,
      Supply Fan 1,             !Fan Name
      FanAndCoilAvailSched,     !Fan Schedule
      0.7,                      !Fan Efficiency
      600.0,                    !Delta Pressure [N/M^2]
      1.3,                      !Max Vol Flow Rate  [m^3/Sec]
      0.9,                      !motor efficiency
      1.0,                      !motor in air stream fraction
      Air Loop Inlet Node, Heating Coil Air Inlet Node,      !Inlet Node, Outlet Node
      , ; cooling part-load factor modifier curve, heating part-load factor modifier curve (not used)

    DIRECT AIR,
        Zone1DirectAir,
        FanAndCoilAvailSched,
        Zone 1 Inlet Node,
        0.47;

    DIRECT AIR,
        Zone2DirectAir,
        FanAndCoilAvailSched,
        Zone 2 Inlet Node,
        0.36;

    DIRECT AIR,
        Zone3DirectAir,
        FanAndCoilAvailSched,
        Zone 3 Inlet Node,
        0.47;
```

Example of Heat-Only Unitary System Specification

Unitary System:BlowThru:HeatOnly Outputs

```
HVAC,Average,Unitary System Fan Part-Load Ratio
```

Field: Unitary System Fan Part-Load Ratio

This output variable is the ratio of actual air mass flow rate through the unitary system to the unitary system's design air mass flow rate (i.e., design volumetric flow rate converted to dry air mass flow rate). For continuous fan mode (ContFanCycCoil), this variable is always 1.0 when the unitary system is available (based on the availability schedule). For cycling fan/cycling coil mode (CycFanCycCoil), the actual air mass flow rate is calculated based on the ratio of the sensible heating load to the unitary system heating capacity. For the cycling fan mode, the runtime fraction for the unitary system fan may be different from the fan part-load ratio reported here due the part-load performance of the unitary system's heating coil (delay at start-up to reach steady-state heating output). In general, runtime fractions are reported by individual components where appropriate (e.g., Fan:Simple:OnOff).

UnitarySystem:BlowThru:HeatCool

The UnitarySystem: BlowThru: HeatCool is the identical model to the Furnace: BlowThru: HeatCool object. The blowthru heat/cool unitary system is a "virtual" component that consists of an ON-OFF fan component, a GAS or ELECTRIC heating coil component and a DX cooling coil component as shown in Figure 62 below. If the high humidity control option is selected, a reheat coil component is also required and the system's configuration when specifying this option is shown in Figure 63. Schematic of Blow Thru Unitary System (HeatCool) with High Humidity Control below.

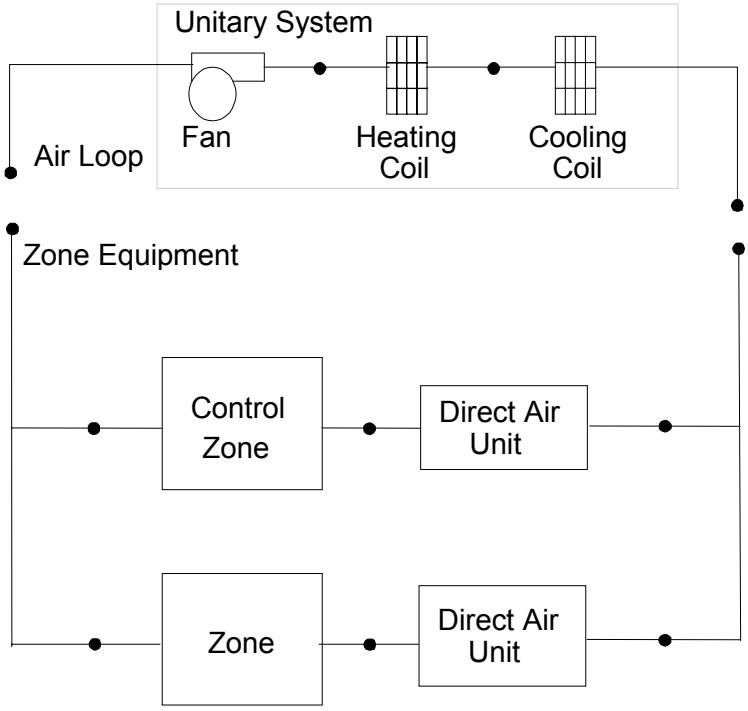

Figure 62. Schematic of EnergyPlus Heat/Cool Unitary System

Links to the fan, heating coil, DX cooling coil and optional reheat coil specifications are provided in the unitary system input data syntax. In addition the control zone name, the fraction of the total system air flow delivered to the control zone and system design operating conditions are specified by the unitary system syntax as shown in the Energy+.idd specification below.

```
UNITARYSYSTEM:BLOWTHRU:HEATCOOL,
   \min-fields 21
   A1,  \field Name of unitary system
        \required-field
   A2,  \field Availability schedule
        \required-field
        \type object-list
        \object-list ScheduleNames
   A3,  \field Unitary system inlet node name
        \required-field
   A4,  \field Unitary system outlet node name
        \required-field
   A5,  \field Operating Mode
        \required-field
        \type choice
        \key CycFanCycCoil
        \key ContFanCycCoil
   N1,  \field Unitary system heating capacity
        \required-field
        \note  Should match heating coil output
        \units W
        \autosizable
   N2,  \field Maximum supply air temperature from unitary system heater
        \units C
        \autosizable
        \default 80
   N3,  \field Design air flow rate through the unitary system
        \required-field
        \note  Needs to match fan size
        \units m3/s
        \autosizable
   A6,  \field Controlling zone or thermostat location
        \required-field
        \object-list ZoneNames
   N4,  \field Fraction of the total or design volume flow that goes through the controlling zone
        \required-field
        \minimum> 0
        \maximum 1
        \autosizable
   A7,  \field Supply fan type
        \required-field
        \type choice
        \key FAN:SIMPLE:ONOFF
        \note  Only works with ON/OFF Fan
   A8,  \field Supply fan name
        \required-field
   A9,  \field Fan outlet node
        \required-field
        \note  Needs to match in the fan object
```

```
A10, \field Heating coil type
     \required-field
     \type choice
     \key COIL:GAS:HEATING
     \key COIL:ELECTRIC:HEATING
     \note  Only works with gas and electric coils
A11, \field Heating coil name
     \required-field
A12, \field Heating coil inlet node
     \required-field
     \note  Needs to match in the heating coil object
A13, \field Cooling coil type
     \required-field
     \type choice
     \key COIL:DX:CoolingBypassFactorEmpirical
     \note  Only works with DX cooling coil
A14, \field Cooling coil name
     \required-field
A15; \field Cooling coil inlet node
     \required-field
     \note  Needs to match in the cooling coil object
N5,  \field Cooling convergence tolerance
     \type real
     \Minimum> 0.0
     \Default 0.001
A16, \field High humidity control
     \type choice
     \key Yes
     \key No
     \default No
     \note  Humidity setpoint from ZONE CONTROL:HUMIDISTAT object
A17, \field Reheat coil type
     \type choice
     \key COIL:GAS:HEATING
     \key COIL:ELECTRIC:HEATING
     \note  Only required if high humidity control input field is "Yes"
     \note  Only works with gas and electric coils
A18, \field Reheat coil name
     \note Only required if high humidity control input field is "Yes"
A19; \field Reheat coil inlet node
     \note Only required if high humidity control input field is "Yes"
     \note  Needs to match in the heating (reheat) coil object
```

Field: Name of unitary system

This alpha field contains the identifying name for the unitary system.

Field: Availability schedule

This alpha field contains the schedule name which contains information on the availability of the unitary system to operate.

Field: Unitary system inlet node name

This alpha field contains the unitary system inlet node name.

Field: Unitary system outlet node name

This alpha field contains the unitary system outlet node name.

Field: Operating Mode

This input field has two choices: CycFanCycCoil or ContFanCycCoil. The first choice stands for "cycling fan cycling coil". This means that the unitary system supply air fan and the heating or cooling coil cycle on and off together to meet the heating or cooling load (a.k.a. AUTO fan). The second choice stands for "continuous fan cycling coil". The supply fan runs continuously while the heating or cooling coil cycles to meet the load.

Field: Unitary system heating capacity

This numeric field contains the system heating capacity in Watts. This capacity should match the specified unitary system heating coil output.

Field: Maximum supply air temperature from unitary system heater

This numeric field contains the design operating air outlet temperature in degrees C when the unitary system is heating. If this input field is left blank, the default value is 80 C.

Field: Design air flow rate through the unitary system

This numeric field contains the design volumetric flow rate of the unitary system in cubic meters per second. This volumetric flow rate should match the flow rate specified for the unitary system fan.

Field: Controlling zone or thermostat location

This alpha field contains the identifying zone name where the thermostat controlling the unitary system is located.

Field: Fraction of the total or design volume flow that goes through the controlling zone

This numeric field contains the fraction (>0 to 1) of the total system volumetric flow rate that is supplied to the zone with the unitary system thermostat.

Field: Supply fan type

This alpha field contains the identifying type of fan specified in the unitary system. Fan type must be FAN:SIMPLE:ONOFF.

Field: Supply fan name

This alpha field contains the identifying name given to the unitary system fan.

Field: Fan outlet node

This alpha field contains the identifying name given to the unitary system fan outlet node, as specified in the fan object.

Field: Heating coil type

This alpha field contains the identifying type of heating coil specified in the unitary system. Heating coil type must be COIL:GAS:HEATING or COIL:ELECTRIC:HEATING.

Field: Heating coil name

This alpha field contains the identifying name given to the unitary system heating coil.

Field: Heating coil inlet node

This alpha field contains the identifying name given to the unitary system heating coil inlet node, as specified in the heating coil object.

Field: Cooling coil type

This alpha field contains the identifying type of cooling coil specified in the unitary system. Cooling coil type must be COIL:DX:CoolingBypassFactorEmpirical.

Field: Cooling coil name

This alpha field contains the identifying name given to the unitary system cooling coil.

Field: Cooling coil inlet node

This alpha field contains the identifying name given to the system cooling coil inlet node, as specified in the cooling coil object.

Field: Cooling convergence tolerance

This numeric field defines the convergence tolerance for the unit's cooling output. This field allows the user some control over how closely the unitary system will control the air-side conditions. The relative size of this parameter relates directly to the closeness of the control. A very small value in this field will result in tight control and will probably result in larger numbers of iterations. A large value in this field will result in looser controls and could result in unsatisfactory fluctuations in zone air temperature. Initial experience with this parameter lends to the recommendation of using 0.001 as the starting point.

The unitary system is controlled by matching its sensible (temperature) cooling output to the zone sensible load (demand). Because the performance of the DX cooling coil is frequently non-linear, the unitary system model must call the DX coil model several times (iterate) to determine the proper run time fraction to meet the zone load. The cooling convergence tolerance is the error tolerance used to terminate the iteration procedure when the following equation is satisfied:

$$\frac{\left|(Q_{ZoneLoad} - Q_{UnitarySystem,out})\right|}{Q_{ZoneLoad}} \leq CoolingConvergenceTolerance$$

The maximum number of iterations is currently limited to 15, with a warning message generated if the above equation is not satisfied within the maximum number of iterations.

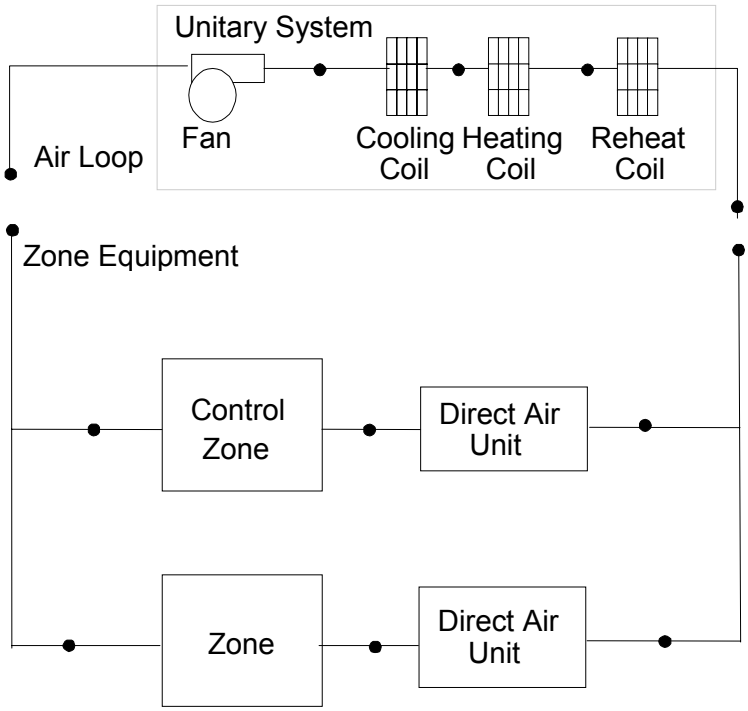

Figure 63. Schematic of Blow Thru Unitary System (HeatCool) with High Humidity Control

Field: High humidity control

This input field has two choices: Yes or No. High humidity control denotes the use of the cooling coil and a reheat coil to keep the control zone from exceeding a relative humidity set point. If high humidity control is specified ('Yes'), then three additional inputs (reheat coil type, name and inlet node) are also required as shown below. The relative humidity set point is specified in the object ZONE CONTROL:HUMIDISTAT.

Field: Reheat coil type

This alpha field contains the identifying type of reheat coil specified in the unitary system. Reheat coil type must be COIL:GAS:HEATING or COIL:ELECTRIC:HEATING.

Field: Reheat coil name

This alpha field contains the identifying name given to the unitary system reheat coil.

Field: Reheat coil inlet node

This alpha field contains the identifying name given to the unitary system reheat coil inlet node, as specified in the heating (reheat) coil object.

As shown in the example below, correct specification of the heat/cool unitary system requires specification of the following objects in addition to the unitary system object:

1. ON-OFF fan
2. heating coil
3. cooling coil

4. reheat coil (optional)
5. direct air unit for each zone served by the unitary system

It should be noted that the volumetric air flow rate specified in the direct air unit for the controlling zone should properly reflect the fractional volumetric air flow rate specified in the unitary system object. In addition, the DX cooling coil operation mode must be specified consistently with the unitary system operating mode (e.g., with CycFanCycCoil for Unitary System operating mode, the DX cooling coil operation mode must be CycFanCycComp).

```
UNITARYSYSTEM:BLOWTHRU:HEATCOOL, GasHeat DXAC Unitary System 1,    ! Unitary system name
      FanAndCoilAvailSched,                                        ! Availability schedule name
      Air Loop Inlet Node, Air Loop Outlet Node,      ! Unitary system inlet and outlet air nodes
      CycFanCycCoil,  ! Unitary system operating mode - must match DX cooling coil operating mode
      25000,          ! Unitary system heating capacity - should match heating coil output[W]
      80,             ! Maximum supply air temperature from unitary system heater [C]
      1.3,            ! Design air flow rate through the system [m^3/s] - Needs to match fan size
      East Zone,      ! Controlling zone or thermostat location
      0.276923,       ! Fraction of the volume flow that goes through the controlling zone
      FAN:SIMPLE:ONOFF, Supply Fan 1,   ! Supply fan type and name
      Heating Coil Air Inlet Node,      ! Fan outlet node and needs to match in the fan object
      COIL:GAS:HEATING, Unitary System Heating Coil 1, ! Heating coil type and name
      Heating Coil Air Inlet Node, ! Heating coil inlet node, needs to match in heating coil object
      COIL:DX:CoolingBypassFactorEmpirical, Unitary system ACDXCoil 1, ! Cooling coil type and name
      DX Cooling Coil Air Inlet Node, ! Cooling coil inlet node, needs to match in cooling coil object
      0.001,                          ! Cooling convergence tolerance
      No;                             ! High humidity control (Yes/No)


   COIL:GAS:HEATING,
      Unitary System Heating Coil 1, ! Name of heating coil
      FanAndCoilAvailSched,          ! Coil Schedule
      0.8,                           ! Gas Burner Efficiency of the Coil
      25000,                         ! Nominal Capacity of the Coil [W]
      Heating Coil Air Inlet Node, DX Cooling Coil Air Inlet Node; ! Coil Air Side Inlet & Outlet Node

   COIL:DX:CoolingBypassFactorEmpirical,
      Unitary System ACDXCoil 1,      ! Name of cooling coil
      FanAndCoilAvailSched,           ! Coil Schedule
      25000,                          ! Rated total cooling capacity [W]
      0.75,                           ! Rated sensible heat ratio
      3.0,                            ! Rated COP
      1.3,                            ! Rated air flow rate [m3/s]
      DX Cooling Coil Air Inlet Node, ! Coil air inlet node
      Air Loop Outlet Node,           ! Coil air outlet node
      WindACCoolCapFT,                ! Cooling capacity modifier curve (temperature,C)
      WindACCoolCapFFF,               ! Cooling capacity modifier curve (flow fraction)
      WindACEIRFT,                    ! Energy input ratio modifier curve (temperature,C)
      WindACPLFFPLR,                  ! Energy input ratio modifier curve (flow fraction)
      CycFanCycComp;                  ! Operation mode (cycling fan, cycling compressor)
```

```
FAN:SIMPLE:ONOFF,
   Supply Fan 1,         !Fan Name
   FanAndCoilAvailSched, !Fan Schedule
   0.7,                  !Fan Efficiency
   600.0,                !Delta Pressure [N/M^2]
   1.3,                  !Max Vol Flow Rate  [m^3/Sec]
   0.9,                  !motor efficiency
   1.0,                  !motor in air stream fraction
   Air Loop Inlet Node, Heating Coil Air Inlet Node,  !Inlet Node, Outlet Node
   WindACPLFFPLR,        ! cooling part-load factor modifier curve
   ;                     ! heating part-load factor modifier curve (not used)

 DIRECT AIR,
     Zone1DirectAir,
     FanAndCoilAvailSched,
     Zone 1 Inlet Node,
     0.47;

 DIRECT AIR,
     Zone2DirectAir,
     FanAndCoilAvailSched,
     Zone 2 Inlet Node,
     0.36;

 DIRECT AIR,
     Zone3DirectAir,
     FanAndCoilAvailSched,
     Zone 3 Inlet Node,
     0.47;
```

Example of Heat/Cool Unitary System Specification

UnitarySystem:BlowThru:HeatCool Outputs

```
HVAC,Average, Unitary System Fan Part-Load Ratio
HVAC,Average, Unitary System Compressor Part-Load Ratio
```

Field: Unitary System Fan Part-Load Ratio

This output variable is the ratio of actual air mass flow rate through the unitary system to the system's design air mass flow rate (i.e., design volumetric flow rate converted to dry air mass flow rate). For continuous fan mode (ContFanCycCoil), this variable is always 1.0 when the unitary system is available (based on the availability schedule). For cycling fan/cycling coil mode (CycFanCycCoil), the actual air mass flow rate is calculated based on the ratio of the sensible heating (or cooling) load to the steady-state unitary system heating (or cooling) capacity. For the cycling fan mode, the runtime fraction for the unitary system fan may be different from the fan part-load ratio reported here due the part-load performance of the system's heating (or cooling) coil (delay at start-up to reach steady-state output). In general, runtime fractions are reported by individual components where appropriate (e.g., Fan:Simple:OnOff).

Field: Unitary System Compressor Part-Load Ratio

This output variable is the ratio of the sensible cooling load to the steady-state cooling capacity of the unitary system's DX cooling coil. For the cycling fan mode, the runtime fraction for the DX cooling coil compressor may be different from the compressor part-load ratio reported here due the part-load performance of the cooling coil (delay at start-up to reach steady-state output). In general, runtime fractions are reported by individual components where appropriate.

UnitarySystem:HeatPump:AirToAir

The unitary air-to-air heat pump is a “virtual” component that consists of an ON-OFF fan component, a DX cooling coil component, a DX heating coil component, and a GAS or ELECTRIC supplementary heating coil component as shown in the Figure below.

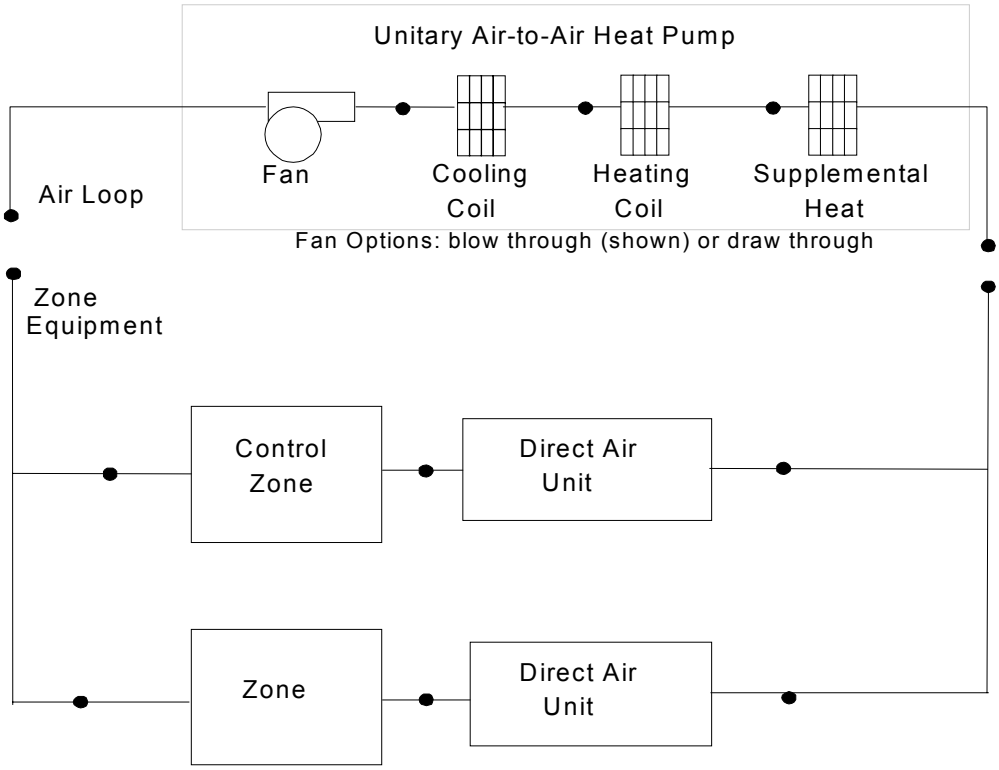

Figure 64. Schematic of EnergyPlus Unitary Air-to-Air Heat Pump

Links to the fan, DX cooling coil, DX heating coil, and supplementary heating coil specifications are provided in the heat pump’s input data syntax. In addition the control zone name, the fraction of the total system air flow delivered to the control zone and system design operating conditions are specified by the heat pump syntax as shown in the Energy+.idd specification below.

```
UNITARYSYSTEM:HEATPUMP:AIRTOAIR,
        \min-fields 25
   A1,  \field Name of heat pump
        \required-field
        \type alpha
   A2,  \field Availability schedule
        \required-field
        \type object-list
        \object-list ScheduleNames
   A3,  \field Heat pump air inlet node name
        \required-field
        \type alpha
   A4,  \field Heat pump air outlet node name
        \required-field
        \type alpha
   N1,  \field Design air flow rate through the heat pump
        \required-field
        \type real
        \note  Needs to match fan size
        \units m3/s
        \autosizable
   A5,  \field Controlling zone or thermostat location
        \required-field
        \type object-list
        \object-list ZoneNames
   N2,  \field Fraction of the total volume flow that goes through the controlling zone
        \required-field
        \type real
        \Minimum> 0
        \Maximum 1
        \autosizable
   A6,  \field Supply air fan type
        \required-field
        \type choice
        \key FAN:SIMPLE:ONOFF
        \note  Only works with ON/OFF Fan
   A7,  \field Supply air fan name
        \required-field
        \type alpha
        \note Needs to match in the fan object
   A8,  \field  Heating coil type
        \required-field
        \type choice
        \key COIL:DX:HeatingEmpirical
        \note  Only works with Coil:DX:HeatingEmpirical
   A9,  \field  Heating coil name
        \required-field
        \type alpha
        \note Needs to match in the DX heating coil object
   N3,  \field  Heating coil capacity
        \required-field
        \type real
        \Minimum> 0.0
        \units W
        \autosizable
        \note Needs to match in the DX heating coil object
   N4,  \field Heating convergence tolerance
        \type real
        \Minimum> 0.0
        \Default 0.001
   N5,  \field Minimum outdoor dry-bulb temperature for heat pump compressor operation
        \type real
        \Minimum -20.0
        \Default -8.0
        \units C
        \note Needs to match in the DX heating coil object
   A10, \field Cooling coil type
        \required-field
        \type choice
        \key COIL:DX:CoolingBypassFactorEmpirical
        \note Only works with Coil:DX:CoolingBypassFactorEmpirical
```

```
A11, \field Cooling coil name
     \required-field
     \type alpha
     \note Needs to match in the DX cooling coil object
N6,  \field Cooling coil capacity
     \required-field
     \type real
     \Minimum> 0.0
     \units W
     \autosizable
     \note Needs to match in the DX cooling coil object
N7,  \field Cooling convergence tolerance
     \type real
     \Minimum> 0.0
     \Default 0.001
A12, \field Supplemental heating coil type
     \required-field
     \type choice
     \key COIL:GAS:HEATING
     \key COIL:ELECTRIC:HEATING
A13, \field Supplemental heating coil name
     \required-field
     \type alpha
     \note Needs to match in the supplemental heating coil object
N8,  \field Supplemental heating coil capacity
     \required-field
     \type real
     \Minimum> 0.0
     \units W
     \autosizable
     \note Needs to match in the supplemental heating coil object
N9,  \field Maximum supply air temperature from heat pump supplemental heater
     \required-field
     \type real
     \units C
     \autosizable
N10, \field Maximum outdoor dry-bulb temperature for supplemental heater operation
     \type real
     \Maximum 21.0
     \Default 21.0
     \units C
A14, \field Fan placement
     \type choice
     \key blow through
     \key draw through
     \Default blow through
A15; \field Heat pump operating mode
     \type choice
     \key CycFanCycComp
     \key ContFanCycComp
     \Default CycFanCycComp
```

Field: Name of heat pump

This alpha field contains the identifying name for the unitary system heat pump.

Field: Availability schedule

This alpha field contains the schedule name (ref. Schedule) that contains information on the availability of the heat pump to operate. A schedule value greater than 0 (usually 1 is used) indicates that the unit can be on during the hour. A value less than or equal to 0 (usually 0 is used) denotes that the unit must be off for the hour.

Field: Heat pump air inlet node name

This alpha field contains the name of the HVAC system node from which the heat pump draws its inlet air.

Field: Heat pump air outlet node name

This alpha field contains the name of the HVAC system node to which the heat pump sends its outlet air.

Field: Design air flow rate through the heat pump

This numeric field contains the design volumetric flow rate through the heat pump in cubic meters per second. This volumetric flow rate should match the flow rate specified for the heat pump's supply air fan, DX cooling coil , DX heating coil and supplemental heating coil.

Field: Controlling zone or thermostat location

This alpha field contains the identifying zone name where the thermostat controlling the heat pump is located.

Field: Fraction of the total volume flow that goes through the controlling zone

This numeric field contains the fraction (>0 to 1) of the total system volumetric flow rate that is supplied to the zone where the thermostat controlling the heat pump is located.

Field: Supply air fan type

This alpha field contains the identifying type of supply air fan specified in the heat pump. Fan type must be Fan:Simple:OnOff.

Field: Supply air fan name

This alpha field contains the identifying name given to the heat pump supply air fan, and should match the name specified in the corresponding fan object.

Field: Heating coil type

This alpha field contains the identifying type of heating coil specified in the heat pump. Heating coil type must be Coil:DX:HeatingEmpirical.

Field: Heating coil name

This alpha field contains the identifying name given to the heat pump DX heating coil, and should match the name specified in the corresponding DX heating coil object.

Field: Heating coil capacity

This numeric field contains the capacity for the DX heating coil in Watts. This capacity should match the specified DX heating coil output.

Field: Heating convergence tolerance

This numeric field defines the convergence tolerance for the unit's heating output. This field allows the user some control over how closely the heat pump will control the air-side conditions. The relative size of this parameter relates directly to the closeness of the control. A very small value in this field will result in tight control and will probably result in larger numbers of iterations. A large value in this field will result in looser controls and could result in unsatisfactory fluctuations in zone air temperature. Initial experience with this parameter lends to the recommendation of using 0.001 as the starting point.

The heat pump is controlled by matching its sensible (temperature) heating output to the zone sensible load (demand). Because the performance of the DX heating coil is frequently non-linear, the heat pump model must call the DX coil model several times (iterate) to determine the proper run time fraction to meet the zone load. The heating convergence

tolerance is the error tolerance used to terminate the iteration procedure when the following equation is satisfied:

$$\frac{\left|(Q_{ZoneLoad} - Q_{HeatPump,out})\right|}{Q_{ZoneLoad}} \leq HeatingConvergenceTolerance$$

The maximum number of iterations is currently limited to 15, with a warning message generated if the above equation is not satisfied within the maximum number of iterations.

Field: Minimum outdoor dry-bulb temperature for heat pump compressor operation

This numeric field defines the outdoor air dry-bulb temperature below which the heat pump DX heating coil turns off. The temperature for this input field must be greater than or equal to –20 C. If this input field is left blank, the default value is -8 C. This temperature should match the minimum compressor operating temperature specified for the heat pump's DX heating coil.

Field: Cooling coil type

This alpha field contains the identifying type of cooling coil specified in the heat pump. Cooling coil type must be Coil:DX:CoolingBypassFactorEmpirical.

Field: Cooling coil name

This alpha field contains the identifying name given to the heat pump cooling coil, and should match the name specified in the corresponding DX cooling coil object.

Field: Cooling coil capacity

This numeric field contains the cooling capacity for the DX cooling coil in Watts. This capacity should match the specified DX cooling coil output.

Field: Cooling convergence tolerance

This numeric field defines the convergence tolerance for the unit's cooling output. This field allows the user some control over how closely the heat pump will control the air-side conditions. The relative size of this parameter relates directly to the closeness of the control. A very small value in this field will result in tight control and will probably result in larger numbers of iterations. A large value in this field will result in looser controls and could result in unsatisfactory fluctuations in zone air temperature. Initial experience with this parameter lends to the recommendation of using 0.001 as the starting point.

The heat pump is controlled by matching its sensible (temperature) cooling output to the zone sensible load (demand). Because the performance of the DX cooling coil is frequently non-linear, the heat pump model must call the DX coil model several times (iterate) to determine the proper run time fraction to meet the zone load. The cooling convergence tolerance is the error tolerance used to terminate the iteration procedure when the following equation is satisfied:

$$\frac{\left|(Q_{ZoneLoad} - Q_{HeatPump,out})\right|}{Q_{ZoneLoad}} \leq CoolingConvergenceTolerance$$

The maximum number of iterations is currently limited to 15, with a warning message generated if the above equation is not satisfied within the maximum number of iterations.

Field: Supplemental heating coil type

This alpha field contains the identifying type of supplemental heating coil specified in the heat pump. Heating coil type must be Coil:Gas:Heating or Coil:Electric:Heating.

Field: Supplemental heating coil name

This alpha field contains the identifying name given to the heat pump supplemental heating coil, and should match the name specified in the corresponding heating coil object.

Field: Supplemental heating coil capacity

This numeric field contains the heating capacity for the supplemental heating coil in Watts. This capacity should match the specified supplemental heating coil output.

Field: Maximum supply air temperature from heat pump supplemental heater

This numeric field defines the maximum allowed supply air temperature exiting the heat pump supplemental heating coil.

Field: Maximum outdoor dry-bulb temperature for supplemental heating coil operation

This numeric field defines the outdoor air dry-bulb temperature above which the heat pump supplemental heating coil is disabled. The temperature for this input field must be less than or equal to 21 C. If this input field is left blank, the default value is 21 C.

Field: Fan placement

This alpha field has two choices: blow through or draw through. The first choice represents a blow through system where the supply air fan is <u>before</u> the DX cooling/heating coil and the supplementary heating coil. The second choice represents a draw through system where the supply air fan is <u>between</u> the DX cooling/heating coil and the supplementary heating coil. If this input field is left blank, the default is blow through.

Field: Heat pump operating mode

This alpha field has two choices: CycFanCycComp or ContFanCycComp. The first choice stands for “cycling fan cycling compressor”. This means that the unit unloads by cycling both the supply air fan and compressor; that is, both the supply fan and the DX coil compressor cycle on and off together to meet the load. The second choice stands for “continuous fan cycling compressor”. The supply air fan runs continuously while the DX coil compressor cycles. If this input field is left blank, the default is CycFanCycComp.

As shown in the example below, correct specification of the air-to-air heat pump requires specification of the following objects in addition to the heat pump object:

1. ON-OFF fan
2. DX cooling coil
3. DX heating coil
4. Supplementary heating coil
5. direct air unit for each zone served by the heat pump

It should be noted that the volumetric air flow rate specified in the direct air unit for the controlling zone should properly reflect the fractional volumetric air flow rate specified in the heat pump object. In addition, the DX cooling coil and DX heating coil operation mode must be specified consistently with the heat pump operating mode (e.g., with CycFanCycComp for heat pump operating mode, the DX cooling <u>and</u> heating coil operation mode must be CycFanCycComp).

UnitarySystem:HeatPump:AirToAir Example Specification

```
   UNITARYSYSTEM:HEATPUMP:AIRTOAIR,
      DXAC Heat Pump 1,            ! Heat Pump name
      FanAndCoilAvailSched,        ! Heat Pump availability schedule
      Mixed Air Node,              ! Heat Pump air inlet  node
      Air Loop Outlet Node,        ! Heat Pump air outlet  node
      1.7,                         ! Design air flow rate through the  heat pump[m^3/s]
                                   ! Needs to match fan and coil air flow rates
      East Zone,                   ! Controlling zone or thermostat location
      0.28,                        ! Fraction of the volume flow that goes through the controlling zone
      FAN:SIMPLE:ONOFF,            ! Supply air fan type
      Supply Fan 1,                ! Supply air fan name -- same name used in fan object
      COIL:DX:HEATINGEMPIRICAL,    ! Heating coil type
      Heat Pump DX Heating Coil 1, ! Heating coil name -- same name used in DX heating coil object
      35000,                  !  Heating coil capacity -  matches DX heating coil output[W]
      0.001,                       ! Heating convergence tolerance
      -5.0,                        ! Minimum OAT for heat pump compressor operation [C]
      COIL:DX:CoolingBypassFactorEmpirical, !  Cooling coil type
      Heat Pump ACDXCoil 1,        !  Cooling coil name -- same name used in DX cooling coil object
      32000,                       !  Cooling coil capacity -  matches DX cooling coil output[W]
      0.001,                       !  Cooling  convergence tolerance
      COIL:GAS:HEATING,            ! Supplemental heating coil type
      Heat Pump DX Supp Heating Coil 1, ! Supplemental heating coil name-- same name used in heating coil
object
      32000,                       ! Supplemental heating coil capacity - matches heating coil output [W]
      50,                          ! Maximum supply air temperature from supplemental heater [C]
      21,                  ! Maximum outdoor dry-bulb temp for supplemental heating coil operation [C]
      blow through,                ! Fan  placement
      CycFanCycComp;               ! Heat pump operating mode - must match DX coil operating mode

   COIL:DX:HEATINGEMPIRICAL,
      Heat Pump DX Heating Coil 1,     !Name of heating coil
      FanAndCoilAvailSched,            !Heating coil schedule
      35000,                           !Rated total heating capacity [W] (at 21.11C/8.33C)
      2.75,                            !Rated heating COP
      1.7,                             !Rated air flow rate [m3/s]
      Heating Coil Air Inlet Node,     !Coil air inlet node
      SuppHeating Coil Air Inlet Node, !Coil air outlet node
      HPACHeatCapFT,                   !Heating capacity modifier curve (temperature,C)
      HPACHeatCapFFF,                  !Heating capacity modifier curve (flow fraction)
      HPACHeatEIRFT,                   !Energy input ratio modifier curve (temperature,C)
      HPACHeatEIRFFF,                  !Energy input ratio modifier curve (flow fraction)
      HPACCoolPLFFPLR,                 !Part load fraction modifier curve (function of part-load ratio)
      ,              !defrost EIR modifier curve (temp, C) not required for resistive defrost
      CycFanCycComp,                   !Operation mode (cycling fan, cycling compressor)
      -5.0,                            !Minimum OAT for heat pump compressor operation [C]
      5.0,                             !Maximum outdoor dry-bulb temp for defrost operation [C]
      200.0,                           ! Crankcase heater capacity[W]
      10.0,                            !Maximum OAT for crankcase heater operation [C]
      resistive,                       !Defrost strategy (resistive or reverse-cycle)
      timed,                           !Defrost control (timed or on-demand)
      0.166667,                        !Defrost time period fraction (used for timed defrost control only)
20000;                          !Resistive defrost heater capacity [W]
```

```
COIL:DX:CoolingBypassFactorEmpirical,
   Heat Pump ACDXCoil 1,            !Name of cooling coil
   FanAndCoilAvailSched,            ! Availability schedule
   32000,                           !Rated total cooling capacity [W]
   0.75,                            !Rated sensible heat ratio
   3.0,                             !Rated COP
   1.7,                             !Rated air flow rate [m3/s]
   DX Cooling Coil Air Inlet Node,  !Coil air inlet node
   Heating Coil Air Inlet Node,     !Coil air outlet node
   HPACCoolCapFT,                   !Cooling capacity modifier curve (temperature,C)
   HPACCoolCapFFF,                  !Cooling capacity modifier curve (flow fraction)
   HPACCoolEIRFT,                   !Energy input ratio modifier curve (temperature,C)
   HPACCoolEIRFFF,                  !Energy input ratio modifier curve (flow fraction)
   HPACCoolPLFFPLR,                 !Part load factor modifier curve (function of part-load ratio)
   CycFanCycComp;                   !Operation mode (cycling fan, cycling compressor)

COIL:GAS:HEATING,
   Heat Pump DX Supp Heating Coil 1, !Name of heating coil
   FanAndCoilAvailSched,             ! Availability schedule
   0.8 ,                             !Gas Burner Efficiency of the Coil
   32000,                            !Nominal Capacity of the Coil [W]
   SuppHeating Coil Air Inlet Node,  !Supplementary heating coil air side inlet node
   Air Loop Outlet Node;             !Supplementary heating coil air side outlet node

FAN:SIMPLE:ONOFF,
   Supply Fan 1,                    ! Fan Name
   FanAndCoilAvailSched,            ! Fan Schedule
   0.7,                             ! Fan Efficiency
   300.0,                           ! Delta Pressure [N/M^2]
   1.7,                             ! Max Vol Flow Rate  [m^3/Sec]
   0.9,                             ! motor efficiency
   1.0,                             ! motor in air stream fraction
   Mixed Air Node,                  ! fan inlet node
   DX Cooling Coil Air Inlet Node;  ! fan outlet node
DIRECT AIR,
   Zone1DirectAir,                  ! direct air unit name
   FanAndCoilAvailSched,            ! schedule name for on/off schedule
   Zone 1 Inlet Node,               ! zone supply air node name
   0.612;                           ! maximum air flow rate, m3/s

DIRECT AIR,
   Zone2DirectAir,                  ! direct air unit name
   FanAndCoilAvailSched,            ! schedule name for on/off schedule
   Zone 2 Inlet Node,               ! zone supply air node name
   0.476;                           ! maximum air flow rate, m3/s

DIRECT AIR,
   Zone3DirectAir,                  ! direct air unit name
   FanAndCoilAvailSched,            ! schedule name for on/off schedule
   Zone 3 Inlet Node,               ! zone supply air node name
   0.612;                           ! maximum air flow rate, m3/s
```

UnitarySystem:HeatPump:AirToAir Outputs

```
HVAC, Average, Unitary Heat Pump Fan  Part-Load Ratio
HVAC, Average, Unitary Heat Pump Compressor  Part-Load Ratio
```

Field: Unitary Heat Pump Fan Part-Load Ratio

This output variable is the ratio of actual air mass flow rate through the heat pump to the heat pump's design air mass flow rate (i.e., design volumetric flow rate converted to dry air mass flow rate). For continuous fan mode (ContFanCycCoil), this variable is always 1.0 when the furnace is available (based on the availability schedule). For cycling fan/cycling coil mode (CycFanCycCoil), the actual air mass flow rate is calculated based on the ratio of the sensible heating (or cooling) load to the steady-state heat pump heating (or cooling) capacity. For the cycling fan mode, the runtime fraction for the heat pump fan may be different from the fan part-load ratio reported here due the part-load performance of the heat pump's heating (or

cooling) coil (delay at start-up to reach steady-state output). In general, runtime fractions are reported by individual components where appropriate (e.g., Fan:Simple:OnOff).

Field: Unitary Heat Pump Compressor Part-Load Ratio

This output variable is the ratio of the sensible load (heating or cooling) to the steady-state capacity of the heat pump's DX heating or cooling coil. For the cycling fan mode, the runtime fraction for the heat pump compressor may be different from the compressor part-load ratio reported here due the part-load performance of the cooling coil (delay at start-up to reach steady-state output). In general, runtime fractions are reported by individual components where appropriate.

Air Conditioner:Window:Cycling

The Window Air Conditioner is a unit of zone equipment made up of other components. Each window air conditioner consists of an outside air mixer, a fan, and a DX coil. These components are described elsewhere in this document. The input for a window air conditioner requires the names of these three pieces of equipment, which are then specified individually elsewhere in the input. The input for a window air conditioner also requires the name of an availability schedule, the maximum unit airflow rate, and the maximum outside airflow rate for the unit. The unit is connected to a zone by specifying an air inlet node, which must be the same as a zone exhaust node; and an air outlet node, which must be the same as a zone inlet node. The unit is connected to the outside air by giving the names of the outdoor air node and the exhaust (relief) node of the unit's outside air mixer. An operation mode must also be specified: the fan can run continuously with the DX coil cycling on/off to match the zone cooling demand; or the fan and DX coil can cycle on/off to meet the cooling demand. The placement of the fan, in relation to the DX coil, must also be specified (blow through or draw through). Finally, the cooling convergence tolerance is required, which is the tolerance denoting how closely the window air conditioner will meet the cooling load. The tolerance is always relative to the zone load (i.e., the unit will operate to meet the zone load to within the tolerance value times the zone load for each simulation time step).

Field: name of window AC unit

A unique user assigned name for an instance of a window air conditioner unit. Any reference to this window air conditioner by another object will use this name.

Field: availability schedule

The name of the schedule (ref: Schedule) that denotes whether the window air conditioner unit can run during a given hour. A schedule value of 1 indicates that the unit can be on during the hour. A value of 0 denotes that the unit must be off for the hour.

Field: maximum air flow rate

The maximum volumetric airflow rate through the window air conditioner in cubic meters per second. Since the unit operates by cycling on/off, this is also the design, rated airflow rate of the unit.

Field: maximum outside air flow rate

If the window air conditioner uses outside air, this field specifies the outside air volumetric flow rate in cubic meters per second. This flow rate should be less than or equal to the maximum airflow rate. A value of zero specifies no outside air. Note that the outside airflow rate is fixed: it cannot change during the simulation

Field: air inlet node

The name of the HVAC system node (see Node) from which the window air conditioner draws its indoor air. This should be one of the zone exhaust nodes for the zone which the window air conditioner is cooling.

Field: air outlet node

The name of the HVAC system node (see Node) to which the window air conditioner sends its outlet air. This should be one of the inlet air nodes for the zone which is being cooled.

Field: outside air node

The name of the HVAC system node (see Node) from which the window air conditioner draws its outside air. This should be the same node as the outside air node of the unit's outside air mixer.

Field: air relief node

The name of the HVAC system node (see Node) to which the window air conditioner exhausts its relief air. This should be the same node as the relief air node of the unit's outside air mixer.

Field: outside air mixer name

The name of an outside air mixer component which composes part of the window air conditioner unit. Note that some of the input for the outside air mixer will duplicate input fields of the window air conditioner. The outside air node of the outside air mixer should be the same as the outside air node of the window air conditioner. The relief air node of the outside air mixer should be the same as the relief air node of the window air conditioner. In addition, the return air node of the outside air mixer should be the same node as the air inlet node of the window air conditioner. In addition, the outside air mixer's mixed air node should be the same as the window air conditioner's fan inlet air node (for blow through) or the air conditioner's DX coil inlet node (for draw through)

Field: fan name

The name of a constant volume fan component that composes part of the window air conditioner. Note that the fan's maximum flow rate should be the same as the maximum airflow rate of the window air conditioner. The fan's inlet node should be the same as the outside air mixer's mixed air node (for blow through) or the DX coil's outlet node (for draw through). The fan's outlet node should be the same as the DX coil's air inlet node (for blow through) or the window air conditioner's air outlet node (for draw through).

Field: DX cooling coil name

The name of a DX cooling coil component that composes part of the window air conditioner unit. The DX coil air inlet node should be the same as the fan outlet node (for blow through) or the outside air mixer's mixed air node (for draw through). The DX coil air outlet node should be the same as the window air conditioner's air outlet node (for blow through) or the fan's inlet node (for draw through). The operation mode of the DX coil should be the same as the operation mode of the window air conditioner (see field below).

Field: operation mode

This input field has two choices: CycFanCycComp or ContFanCycComp. The first choice stands for "cycling fan cycling compressor". This means that the unit unloads by cycling both the fan and compressor; that is, both the fan and the DX coil unit compressor cycle on and off together to meet the load. The second choice stands for "continuous fan cycling compressor".

The fan runs continuously while the DX coil unit compressor cycles on and off to meet the load.

Field: fan placement

This input field has two choices: blow through or draw through. The first choice stands for "blow through fan". This means that the unit consists of an outside air mixer followed by a fan followed by a DX coil. The fan "blows through" the DX coil. The second choice stands for "draw through fan". This means that the unit consists of an outside air mixer followed by a DX coil followed by a fan. The fan "draws air through" the coil.

Field: Cooling Convergence Tolerance

This input field defines the convergence tolerance for the unit's cooling output. This field allows the user some control over how closely the air conditioner will control the air-side conditions. The relative size of this parameter relates directly to the closeness of the control. A very small value in this field will result in tight control and will probably result in larger numbers of iterations. A large value in this field will result in looser controls and could result in unsatisfactory fluctuations in zone air temperature. Initial experience with this parameter lends to the recommendation of using 0.001 as the starting point.

The window air conditioner is controlled by matching its sensible (temperature) cooling output to the zone sensible load (demand). Because the performance of the DX coil is frequently non-linear, the air conditioner model must call the DX coil model several times (iterate) to determine the proper run time fraction to meet the zone load. The cooling convergence tolerance is the error tolerance used to terminate the iteration procedure when the following equation is satisfied:

$$\frac{\left|Q_{ZoneLoad} - Q_{WindowAirConditioner,out})\right|}{Q_{ZoneLoad}} \leq CoolingConvergenceTolerance$$

The maximum number of iterations is currently limited to 15, with a warning message generated if the above equation is not satisfied within the maximum number of iterations.

Below is the IDD specification of the cycling window air conditioner.

```
AIR CONDITIONER:WINDOW:CYCLING,
   A1, \field name of window AC unit
       \required-field
       \type alpha
   A2 , \field availability schedule
        \required-field
        \type object-list
        \object-list ScheduleNames
   N1 , \field maximum air flow rate
        \required-field
        \type real
        \units m3/s
   N2 , \field maximum outside air flow rate
        \required-field
        \type real
        \units m3/s
   A3 , \field air inlet node
        \type alpha
   A4 , \field air outlet node
        \type alpha
   A5 , \field outside air node
        \ type alpha
   A6 , \field air relief node
        \type alpha
   A7 , \field outside air mixer name
        \type alpha
   A8 , \field fan name
        \type alpha
   A9 , \field DX cooling coil name
        \type alpha
   A10, \field operation mode
        \type choice
        \key CycFanCycComp
        \key ContFanCycComp
        \note for CycFanCycComp, entire unit cycles on/off to meet the cooling load
        \note for ContFanCycComp, fan runs continuously while DX coil cycles on/off to meet load
   A11; \field fan placement
        \type choice
        \key blow through
        \key draw through
   N2 ; \field Cooling Convergence Tolerance
        \type real
        \Minimum> 0.0
        \Default 0.001
```

Following is an example input for the cycling window air conditioner, along with its constituent components.

```
AIR CONDITIONER:WINDOW:CYCLING,
       Zone3WindAC, ! Name
       FanAndCoilAvailSched,     ! on/off schedule
       0.6,                      ! air flow rate in m3/s
       0.05,                     ! outside air flow rate in m3/s
       Zone3WindACAirInletNode,  ! air inlet node to AC; also a zone exhaust node
       Zone3WindACAirOutletNode, ! air outlet node of AC; also a zone inlet node
       Zone3WindACOAInNode,      ! AC outside air inlet node
       Zone3WindACExhNode,       ! AC relief air node
       Zone3WindACOAMixer,       ! name of outside air mixer in AC
       Zone3WindACFan,           ! name of fan in AC
       Zone3WindACDXCoil,        ! name of DX coil in AC
       ContFanCycComp,           ! operation mode
       draw through,             ! fan placement
       0.001;                    ! cooling convergence tolerance

   OUTSIDE AIR MIXER,
       Zone3WindACOAMixer,           ! name
       Zone3WindACOAMixerOutletNode, ! mixer outlet node
       Zone3WindACOAInNode,          ! mixer OA node
       Zone3WindACExhNode,           ! mixer relief node
       Zone3WindACAirInletNode;      ! mixer inlet node

   FAN:SIMPLE:ConstVolume,
       Zone3WindACFan, ! name
       FanAndCoilAvailSched, ! fan on/off schedule
       0.5,                  ! total efficiency
       75.0,                 ! pressure rise in Pascals (typical fan coil value)
       0.6,                  ! flow rate in m3/s
       0.9,                  ! motor efficiency
       1.0,                  ! motor in air stream fraction
       Zone3WindACDXOutletNode,      ! fancoil fan inlet node
       Zone3WindACAirOutletNode;     ! fancoil fan outlet node

   COIL:DX:BF-Empirical,
       Zone3WindACDXCoil, ! name
       FanAndCoilAvailSched, ! coil on/off schedule
       10548,      ! rated total cooling capacity (3 tons)
       0.75,       ! rated sensible heat ratio
       3.0,        ! rated COP
       0.6,        ! rated air flow rate (m3/s)
       Zone3WindACOAMixerOutletNode, ! coil air inlet mode
       Zone3WindACDXOutletNode,      !coil air outlet node
       WindACCoolCapFT,              ! cooling cap modifier curve (temperature, C)
       WindACCoolCapFFF,             ! cooling cap modifier curve (flow fraction)
       WindACEIRFT,                  ! energy input ratio modifier curve (temperature, C)
       WindACEIRFFF,                 ! energy input ratio modifier curve (flow fraction)
       WindACPLFFPLR,                ! part load factor modifier curve (flow fraction)
       ContFanCycComp;               ! operation mode
```

Air Conditioner:Window:Cycling Outputs

```
HVAC,Average,Window AC Total Zone Cooling Rate[W]
HVAC,Sum,Window AC Total Zone Cooling Energy[J]
HVAC,Average,Window AC Sensible Zone Cooling Rate[W]
HVAC,Sum,Window AC Sensible Zone Cooling Energy[J]
HVAC,Average,Window AC Latent Zone Cooling Rate[W]
HVAC,Sum,Window AC Latent Zone Cooling Energy[J]
HVAC,Average,Window AC Electric Power[W]
HVAC,Sum,Window AC Electric Consumption[J]
HVAC,Average,Window AC Fan RunTime Fraction
HVAC,Average,Window AC Compressor RunTime Fraction
```

Field: Window AC Total Zone Cooling Rate[W]

This field is the total (sensible and latent) heat extraction rate of the window air conditioner unit from the zone it is serving in Watts. This is determined by the outlet and zone conditions and the mass flow rate through the unit.

Field: Window AC Total Zone Cooling Energy[J]

This is the total (sensible and latent) heat extraction of the window air conditioner unit from the zone it is serving in Joules over the time step being reported. This is determined by outlet and zone air conditions, the mass flow rate through the unit, and the time step.

Field: Window AC Sensible Zone Cooling Rate[W]

This field reports the moist air sensible heat extraction rate of the window air conditioner unit from the zone it is serving in Watts. This is determined by the outlet and zone conditions and the mass flow rate through the unit.

Field: Window AC Sensible Zone Cooling Energy[J]

This field reports the moist air sensible heat extraction of the window air conditioner unit from the zone it is serving in Joules over the time step being reported. This is determined by the outlet and zone conditions and the mass flow rate through the unit.

Field: Window AC Latent Zone Cooling Rate[W]

This output is the latent heat extraction rate of the window air conditioner unit from the zone it is serving in Watts. This is determined by the outlet and zone conditions and the mass flow rate through the unit.

Field: Window AC Latent Zone Cooling Energy[J]

This is the latent heat extraction of the window air conditioner unit from the zone it is serving in Joules over the time step being reported. This is determined by the outlet and zone conditions and the mass flow rate through the unit.

Field: Window AC Electric Power[W]

This output is the electricity consumption rate of the window air conditioner unit in Watts. The consumption includes electricity used by the compressor and the fans (indoor supply air fan and the condenser fan).

Field: Window AC Electric Consumption[J]

This output is the electricity consumption of the window air conditioner unit in Joules for the time period being reported. The consumption includes electricity used by the compressor and the fans (indoor supply air fan and the condenser fan).

Field: Window AC Fan RunTime Fraction

This is the fraction of the report time step during which the fan had operated.

Field: Window AC Compressor RunTime Fraction

This is the fraction of the report time step during which the DX unit compressor had operated.

DXSystem:AirLoop

The blow thru DX System is a “virtual” component that consists of DX cooling coil component as shown in the Figure below. The DX cooling coil specifications is provided in the input data

syntax. This coil can be specified anywhere in the air loop simulation but will control the best with a blow through fan since the fan heat will be handled the most accurate.

This system does not need any plant specification and will provide the electric consumption necessary to operate the compressor and the condenser fan. The supply fan is simulated separately. This coil can be used with any system that a coil roughly meets a deck temperature and can be designed for use with all the terminal reheat, variable volume either single or multi duct systems. Any system where the deck temperature is met in the air loop and the trim control for the zone is met downstream.

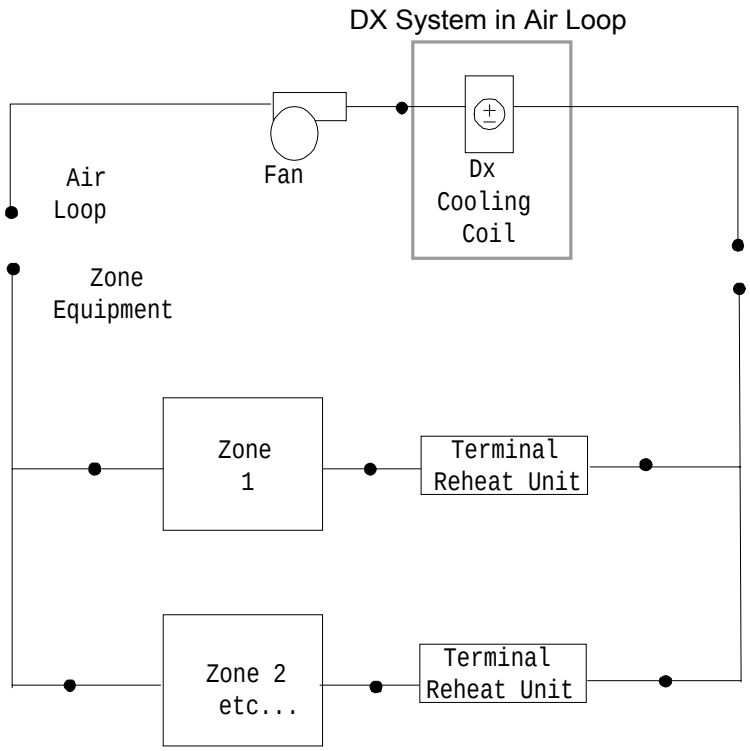

Figure 65. Schematic of EnergyPlus DX System in Air Loop

The IDD is shown below:

```
DXSystem:AirLoop,
   A1 , \field Name of DX Cooling Coil System
        \type alpha
   A2 , \field Availability schedule
        \type object-list
        \object-list ScheduleNames
   A3 , \field DX Cooling Coil System inlet node name
        \type alpha
   A4 , \field DX Cooling Coil System outlet node name
        \type alpha
   A5 , \field DX Cooling Coil System Control Node
        \type alpha
   A6,  \field Cooling coil type
        \note  Only works with DX cooling coil
   A7;  \field Cooling coil name
```

Field: Name of DX Cooling Coil System

This alpha field contains the identifying name for the DX System.

Field: Availability schedule

This alpha field contains the schedule name that contains information on the availability of the DX System to operate.

Field: DX Cooling coil System inlet node

This alpha field contains the identifying name given to the DX cooling coil inlet node, as specified in the DX cooling coil object.

Field: DX Cooling coil System outlet node

This alpha field contains the identifying name given to the DX cooling coil outlet node, as specified in the cooling coil object.

Field: DX Cooling coil system control node

This alpha field contains the identifying name given to the DX cooling coil control node, this is the node at which the temperature set point is specified by the set point manager.

Field: Cooling coil type

This alpha field contains the identifying type of cooling coil specified in the DX system. Cooling coil type must be DX.

Field: Cooling coil name

This alpha field contains the identifying name given to the DX cooling coil.

As shown in the example below, correct specification of the furnace requires specification of the DX Cooling Coil object in addition to the HVACDXSystem object:

In addition, the DX cooling coil operation mode must be specified consistently with the DX system operating mode (e.g., the DX cooling coil operation mode must be ContFanCycComp).

An example IDF specification:

```
DXSystem:AirLoop,
   DX Cooling Coil System 1,  !Name of the DX System
   CoolingCoilAvailSched,
   Cooling Coil Air Inlet Node, Air Loop Outlet Node,
   Air Loop Outlet Node,     !Control node name
   COIL:DX:BF-Empirical, ACDXCoil 1;  !DX Cooling Coil type and Name

COIL:DX:BF-Empirical,
    ACDXCoil 1,        ! name
    CoolingCoilAvailSched,     ! coil on/off schedule
    25000,      ! rated total cooling capacity (3 tons)
    0.75,       ! rated sensible heat ratio
    3.0,        ! rated COP
    1.3,         ! rated air flow rate (m3/s)
    Cooling Coil Air Inlet Node, ! coil air inlet mode
    Air Loop Outlet Node, ! coil air outlet node
    WindACCoolCapFT,          ! cooling cap modifier curve (temperature, C)
    WindACCoolCapFFF,         ! cooling cap modifier curve (flow fraction)
    WindACEIRFT,              ! energy input ratio modifier curve (temperature, C)
    WindACEIRFFF,             ! energy input ratio modifier curve (flow fraction)
    WindACPLFFPLR,            ! part load factor modifier curve (flow fraction)
    ContFanCycComp;           ! operation mode
```

Example of DX System Specification

DXSystem:AirLoop Outputs

Group – Radiative Convective Units

Baseboard Heater:Water:Convective

The hot water baseboard heater is a component of zone equipment. The component is controlled to meet any remaining zone load not met by other equipment in the zone that have higher heating priority. The control is accomplished by throttling the hot water flow. Input resembles that for the simple heating coil: there is an availability schedule, an overall UA, and a maximum hot water mass flow rate. The unit is connected to a hot water loop (demand side) with an inlet and outlet node. Finally, there is the convergence tolerance, which is the tolerance on how closely the baseboard outlet will meet the zone load. Of course, this tolerance is relative to the zone load. The input data dictionary definition of the unit is as follows.

Field: Baseboard Name

A unique user assigned name for an instance of a hot water baseboard heater unit. Any reference to this unit by another object will use this name.

Field: Available Schedule

The name of the schedule (ref: Schedule) that denotes whether the hot water baseboard heater unit can run during a given hour. A schedule value greater than 0 (usually 1 is used) indicates that the unit can be on during the hour. A value less than or equal to 0 (usually 0 is used) denotes that the unit must be off for the hour.

Field: Inlet_Node

The name of the hot water inlet node for the baseboard heater.

Field: Outlet_Node

The name of the hot water outlet node for the baseboard heater.

Field: UA

The overall heat transfer coefficient for the baseboard heater in watts per degree Celsius at design conditions. The UA is defined by the equation

$$q = UA \times (T_{water,in} - T_{air,in})$$

where q is the heat transferred from water to the air in watts; $T_{water,\ in}$ is the inlet water temperature in degrees C; and $T_{air,\ in}$ is the inlet air temperature in degrees C (in this case just the room air temperature).

Field: Max Water Volumetric Flow Rate

The maximum hot water volumetric flow rate in m^3/sec.

Field Convergence Tolerance

The control tolerance for the unit heating output. The unit is controlled by matching the unit output to the zone demand. For hot water baseboards, the model must be numerically inverted to obtain a specified output. The convergence tolerance is the error tolerance used to terminate the numerical inversion procedure. Basically this is the fraction:

$$\frac{\left|(Q_{bb,out} - Q_{ZoneLoad})\right|}{Q_{ZoneLoad}} \leq ConvergenceTolerance$$

The default is 0.001.

```
BASEBOARD HEATER:Water:Convective,
  A1 , \field Baseboard Name
  A2 , \field Available Schedule
       \type object-list
       \object-list ScheduleNames
  A3 , \field Inlet_Node
  A4 , \field Outlet_Node
  N1 , \field UA
  N2 , \field Max Water Flow Rate
       \units m3/s
  N3 ; \field Convergence Tolerance
       \type real
       \Minimum> 0.0
       \Default 0.001
```

An example IDF for the hot water convective baseboard is shown below.

```
BASEBOARD HEATER:Water:Convective,
        Zone3Baseboard, ! name
        FanAndCoilAvailSched, ! on/off schedule
        Zone 3 Reheat Water Inlet Node, ! water inlet node
        Zone 3 Reheat Water Outlet Node, ! water outlet node
        500.,    ! UA
        0.0013,  ! maximum water flow rate m3/s
        0.001;   ! tolerance
```

Baseboard Heater Outputs

```
HVAC,Average,Baseboard Heating Rate[W]
HVAC,Sum,Baseboard Heating Energy[J]
Zone,Meter,Baseboard:EnergyTransfer [J]
```

Field: Baseboard Heating Rate[W]

This is the heat addition rate of the convective baseboard to the zone it is serving in Watts.

Field: Baseboard Heating Energy[J]

This is the heat addition of the convective baseboard to the zone it is serving in Joules over the time step being reported.

Field: Baseboard:EnergyTransfer [J]

This meter report variable is the sum of the baseboard heat output from all the baseboards in the HVAC systems in the simulation.

Low Temp Radiant System:Hydronic

The low temperature radiant system (hydronic) is a component of zone equipment that is intended to model any “radiant system” where water is used to supply/remove energy to/from a building surface (wall, ceiling, or floor). The component is controlled to meet any remaining zone load not met by other equipment in the zone that have higher priority. The control is accomplished by throttling the hot or chilled water flow to the unit. This model covers a wide range of low temperature radiant systems: heating and/or cooling, panel or embedded pipes, etc. It is not intended to simulate high temperature electric or gas radiant heaters. Those devices will be handled by a separate model and different input syntax. Low temperature radiant systems that use electric resistance heating should also be defined using separate

input syntax (ref: Low Temp Radiant System:Electric). The input data dictionary definition of a hydronic low temperature radiant system is as follows.

Field: Name of hydronic low temperature radiant system

This field is an unique user assigned name for an instance of a hydronic low temperature radiant system. Any reference to this unit by another object will use this name.

Field: Availability schedule

This field is the name of the schedule (ref: Schedule) that denotes whether the hydronic low temperature radiant system can run during a given hour. A schedule value greater than 0 (usually 1 is used) indicates that the unit is available and can be on during the hour. A value less than or equal to 0 (usually 0 is used) denotes that the unit is not available and must be off for the hour.

Field: Zone name

This field is the name of the zone (Ref: Zone) in which the hydronic low temperature radiant system is principally located and intended to affect. A system that is between two zones will still act upon each zone; however, the zone name referenced here should be the zone that controls the radiant system response.

Field: Surface name

This field is the name of the surface (Ref: Surface) in which the hydronic tubing is embedded/contained. This specification attaches the source or sink from the radiant system to a particular surface and the contribution of the system to the heat balances of that surface.

Field: Hydronic tubing inside diameter

This field is the inside diameter of the tubes through which water is circulated for the system being defined by this statement. The inside diameter should be recorded in meters and is used to determine the convective heat transfer from the water to the inside surface of the hydronic tubing.

Field: Hydronic tubing length

This field is the total length of pipe embedded in the surface named above in the surface name field. The length of the tube should be entered in meters and is used to determine the effectiveness of heat transfer from the fluid being circulated through the tubes and the tube/surface. Longer tubing lengths result in more heat will be transferred to/from the radiant surface to the circulating fluid.

Field: Temperature control type

This field specifies along with the throttling range and setpoint schedules how the user wishes to control the hydronic radiant system. The temperature denoted in the setpoint schedule can refer to one of three different temperatures: a mean air temperature, a mean radiant temperature, or an operative temperature. The choice of temperature is controlled by the current field—temperature control type. The user must select from the following options: MAT, MRT, or OPERATIVE. If the user does not select a control type, MAT control is assumed by EnergyPlus. See the throttling range and control temperature schedule fields below for more information.

Field: Maximum hot water flow

This field is the maximum flow rate of hot water through the radiant system in m^3/sec. The controls for the radiant system will vary the flow rate of hot water through the surface using

zero flow and the maximum flow rate specified in this field as the lower and upper bounds, respectively.

Field: Heating water inlet node

This field contains the name of the hot water inlet node to the radiant system. Note that this node name must also show up in the branch description when defining the plant demand side network in a manner identical to defining a heating coil.

Field: Heating water outlet node

This field contains the name of the hot water oulet node to the radiant system. Note that this node name must also show up in the branch description when defining the plant demand side network in a manner identical to defining a heating coil.

Field: Heating control throttling range

This field specifies the range of temperature in degrees Celsuis over which the radiant system throttles from zero flow rate up to the maximum defined by the maximum hot water flow rate field described above. The throttling range parameter is used in conjunction with the control temperature to define the response of the system to various zone conditions. The heating control temperature schedule specifies the "setpoint" temperature where the flow rate to the system is at half of the maximum flow rate. For example, if the heating control temperature setpoint is currently 15°C and the heating throttling range is 2°C, the water flow rate to the radiant system will be zero when the controlling temperature (MAT, MRT, or Operative Temperature; see control type field above) is at or above 16°C and the maximum flow rate when the controlling temperature is at or below 14°C. This represents a throttling range of 2°C around the setpoint of 15°C. In between 14°C and 16°C, the flow rate to the radiant system is varied linearly.

Field: Heating control temperature schedule

This field specifies the heating setpoint or control temperature for the radiant system in degrees Celsius. Used in conjunction with the previous field (heating control throttling range), it will define whether or not the system is running and the current flow rate. Water flow rate to the system is varied linearly around the setpoint temperature based on the throttling range and the maximum heating flow rate parameters (see above). It should be noted that this control schedule will allow different setpoint temperatures throughout the year for heating. In addition, this schedule may be different that the thermostatic control schedule defined for overall operation of components serving the zone in which the radiant system is located. The thermostatic control determines whether or not there is a heating or cooling load in the space and thus whether the systems should be operating. This field simply controls the flow rate to the radiant system.

Field: Maximum cold water flow

This field is the maximum flow rate of cold water through the radiant system in m^3/sec. The controls for the radiant system will vary the flow rate of cold water through the surface using zero flow and the maximum flow rate specified in this field as the lower and upper bounds, respectively. Note that this field is optional and not required for a heating only system.

Field: Cooling water inlet node

This field contains the name of the cold water inlet node to the radiant system. Note that this node name must also show up in the branch description when defining the plant demand side network in a manner identical to defining a cooling coil. As with the maximum cold water flow rate, this field is optional and not required for a heating only system.

Field: Cooling water outlet node

This field contains the name of the cold water oulet node to the radiant system. Note that this node name must also show up in the branch description when defining the plant demand side network in a manner identical to defining a cooling coil. As with the maximum cold water flow rate, this field is optional and not required for a heating only system.

Field: Cooling control throttling range

This field specifies the range of temperature in degrees Celsuis over which the radiant system throttles from zero flow rate up to the maximum defined by the maximum cold water flow rate field described above. The throttling range parameter is used in conjunction with the control temperature to define the response of the system to various zone conditions. The cooling control temperature schedule specifies the "setpoint" temperature where the flow rate to the system is at half of the maximum flow rate. For example, if the cooling control temperature setpoint is currently 25°C and the cooling throttling range is 2°C, the water flow rate to the radiant system will be zero when the controlling temperature (MAT, MRT, or Operative Temperature; see control type field above) is at or below 24°C and the maximum flow rate when the controlling temperature is at or above 26□C. This represents a throttling range of 2°C around the setpoint of 25°C. In between 24°C and 26°C, the flow rate to the radiant system is varied linearly.

Field: Cooling control temperature schedule

This field specifies the cooling setpoint or control temperature for the radiant system in degrees Celsius. Used in conjunction with the previous field (cooling control throttling range), it will define whether or not the system is running and the current flow rate. Water flow rate to the system is varied linearly around the setpoint temperature based on the throttling range and the maximum cooling flow rate parameters (see above). It should be noted that this control schedule will allow different setpoint temperatures throughout the year for cooling. In addition, this schedule may be different that the thermostatic control schedule defined for overall operation of components serving the zone in which the radiant system is located. The thermostatic control determines whether or not there is a heating or cooling load in the space and thus whether the systems should be operating. This field simply controls the flow rate to the radiant system.

```
LOW TEMP RADIANT SYSTEM:HYDRONIC,
   A1 , \field name of hydronic low temperature radiant system
   A2 , \field availability schedule
        \type object-list
        \object-list ScheduleNames
   A3 , \field Zone name (name of zone system is serving)
        \type object-list
        \object-list ZoneNames
   A4 , \field Surface name (name of surface system is embedded in)
        \type object-list
        \object-list SurfaceNames
   N1 , \field Hydronic tubing inside diameter
        \units m
        \minimum> 0
   N2 , \field Hydronic tubing length (total length of pipe embedded in surface)
        \units m
        \minimum> 0
   A5 , \field temperature control type (temperature on which unit is controlled)
        \type choice
        \key MAT
        \key MRT
        \key OPERATIVE
        \default MAT
```

```
   N3 , \field maximum hot water flow
        \units m3/s
        \minimum 0
   A6 , \field heating water inlet node
   A7 , \field heating water outlet node
   N4 , \field heating control throttling range
        \units degrees C
        \minimum 0
        \default 0
   A8 , \field heating control temperature schedule
        \type object-list
        \object-list ScheduleNames
   N5 , \field maximum cold water flow
        \units m3/s
        \minimum 0
   A9 , \field cooling water inlet node
   A10, \field cooling water outlet node
   N6 , \field cooling control throttling range
        \units degrees C
        \minimum 0
        \default 0
   A11; \field cooling control temperature schedule
        \type object-list
        \object-list ScheduleNames
```

An example IDF with a hydronic low temperature radiant system is shown below.

```
LOW TEMP RADIANT SYSTEM:HYDRONIC,
   Resistive Zone Radiant Floor, ! name of hydronic low temperature radiant system
   RadiantSysAvailSched,       ! availability schedule
   Resistive Zone,             ! Zone name (name of zone system is serving)
   Zn001:Flr001,               ! Surface name (name of surface system is embedded in)
   0.012,                      ! Hydronic tubing inside diameter in meters
   400.0,                      ! Hydronic tubing length (total length of pipe embedded in surf) in meters
   MAT,                        ! control type (control on mean air temperature)
   0.00008,                    ! maximum hot water flow in m3/s
   Resistive Zone Radiant Water Inlet Node,  ! heating water inlet node
   Resistive Zone Radiant Water Outlet Node, ! heating water outlet node
   2.0,                        ! heating throttling range in degrees Celsius
   Radiant Heating Setpoints,  ! heating setpoint temperature schedule
   0.0012,                     ! maximum cold water flow in m3/s
   Zone 1 Cooling Water Inlet Node,  ! cooling water inlet node
   Zone 1 Cooling Water Outlet Node, ! cooling water outlet node
   2.0,                        ! cooling throttling range in degrees Celsius
   Radiant Cooling Setpoints;  ! cooling setpoint temperature schedule
```

Hydronic Low Temperature Radiant System Outputs

```
HVAC,Average,Hydronic Low Temp Radiant Heating Rate[W]
HVAC,Sum,Hydronic Low Temp Radiant Heating Energy[J]
HVAC,Average,Hydronic Low Temp Radiant Cooling Rate[W]
HVAC,Sum,Hydronic Low Temp Radiant Cooling Energy[J]
HVAC,Average,Hydronic Low Temp Radiant Water Mass Flow[kg/s]
HVAC,Average,Hydronic Low Temp Radiant Water Inlet Temp[C]
HVAC,Average,Hydronic Low Temp Radiant Water Outlet Temp[C]
```

Field: Hydronic Low Temp Radiant Heating Rate[W]

This field reports the heating input rate to the low temperature radiant system in Watts. This is the heat source to the surface that is defined as the radiant system. The heating rate is determined by the zone conditions and the control scheme defined in the user input.

Field: Hydronic Low Temp Radiant Heating Energy[J]

This field reports the heating input to the low temperature radiant system in Joules. This is the heat source to the surface that is defined as the radiant system. The heating rate is determined by the zone conditions, the control scheme defined in the user input, and the time step.

Field: Hydronic Low Temp Radiant Cooling Rate[W]

This field reports the cooling input rate to the low temperature radiant system in Watts. This is the heat sink to the surface that is defined as the radiant system. The cooling rate is determined by the zone conditions and the control scheme defined in the user input.

Field: Hydronic Low Temp Radiant Cooling Energy[J]

This field reports the cooling input to the low temperature radiant system in Joules. This is the heat sink to the surface that is defined as the radiant system. The cooling rate is determined by the zone conditions, the control scheme defined in the user input, and the time step.

Field: Hydronic Low Temp Radiant Water Mass Flow Rate[kg/s]

This field reports the mass flow rate of water through the low temperature radiant system in kilograms per second.

Field: Hydronic Low Temp Radiant Water Inlet Temp[C]

This field reports the temperature of water entering the low temperature radiant system in Celsius.

Field: Hydronic Low Temp Radiant Water Outlet Temp[C]

This field reports the temperature of water leaving the low temperature radiant system in Celsius.

Low Temp Radiant System:Electric

The low temperature radiant system (electric) is a component of zone equipment that is intended to model any “radiant system” where electric resistance heating is used to supply energy (heat) to a building surface (wall, ceiling, or floor). The component is controlled to meet any remaining zone heating load not met by other equipment in the zone that have higher heating priority. The control is accomplished by varying the electrical power supplied to the unit. This model covers either a radiant panel system or wires embedded in entire walls, floors, or ceilings. It is not intended to simulate high temperature electric or gas radiant heaters. Those devices will be handled by a separate model and different input syntax. Low temperature radiant systems that use water flowing through tubes to provide heat to the system should also be defined using separate input syntax (ref: Low Temp Radiant System:Hydronic). The input data dictionary definition of an electric low temperature radiant system is as follows.

Field: Name of electric resistance low temperature radiant system

This field is an unique user assigned name for an instance of an electric low temperature radiant system. Any reference to this unit by another object will use this name.

Field: Availability schedule

This field is the name of the schedule (ref: Schedule) that denotes whether the electric low temperature radiant system can operate during a given hour. A schedule value greater than 0 (usually 1 is used) indicates that the unit is available and can be on during the hour. A value less than or equal to 0 (usually 0 is used) denotes that the unit is not available and must be off for the hour.

Field: Zone name

This field is the name of the zone (Ref: Zone) in which the electric low temperature radiant system is principally located and intended to affect. A system that is between two zones will still act upon each zone; however, the zone name referenced here should be the zone that controls the radiant system response.

Field: Surface name

This field is the name of the surface (Ref: Surface) in which the electric resistance wire is embedded/contained. This specification attaches the heat source from the radiant system to a particular surface and the contribution of the system to the heat balances of that surface.

Field: Maximum electrical power to panel

This field is the maximum amount of electrical energy that can be converted to heat in this particular radiant system in Watts. The controls for the radiant system will vary the amount of power supplied to the surface between zero input and the maximum power specified in this field as the lower and upper bounds, respectively.

Field: Temperature control type

This field specifies along with the throttling range and setpoint schedules how the user wishes to control the low temperature electric radiant system. The temperature denoted in the setpoint schedule can refer to one of three different temperatures: a mean air temperature, a mean radiant temperature, or an operative temperature. The choice of temperature is controlled by the current field—temperature control type. The user must select from the following options: MAT, MRT, or OPERATIVE. If the user does not select a control type, MAT control is assumed by EnergyPlus. See the throttling range and control temperature schedule fields below for more information.

Field: Heating throttling range

This field specifies the range of temperature in degrees Celsuis over which the radiant system throttles from zero heat input via the electric resistance wires up to the maximum defined by the maximum electrical power field described above. The throttling range parameter is used in conjunction with the control temperature (see below) to define the response of the system to various zone conditions. The heating control temperature schedule specifies the “setpoint” temperature where the power input to the system is at half of the maximum power input. For example, if the heating control temperature setpoint is currently 15°C and the heating throttling range is 2°C, the electrical power supplied to the radiant system will be zero when the controlling temperature (MAT, MRT, or Operative Temperature; see control type field above) is at or above 16°C and the maximum power input when the controlling temperature is at or below 14°C. This represents a throttling range of 2°C around the setpoint of 15°C. In between 14°C and 16°C, the power input to the radiant system is varied linearly.

Field: Heating setpoint temperature schedule

This field specifies the heating setpoint or control temperature for the radiant system in degrees Celsius. Used in conjunction with the previous field (heating throttling range), it will define whether or not the system is running and the current power input to the radiant surface. Power input to the system is varied linearly around the setpoint temperature based on the throttling range and the maximum electrical power parameters (see above). It should be noted that this control schedule will allow different setpoint temperatures throughout the year for heating. In addition, this schedule may be different that the thermostatic control schedule defined for overall operation of components serving the zone in which the radiant system is located. The thermostatic control determines whether or not there is a heating or

cooling load in the space and thus whether the systems should be operating. This field simply controls the flow rate to the radiant system.

```
LOW TEMP RADIANT SYSTEM:ELECTRIC,
   A1 , \field name of electric resistance low temperature radiant system
   A2 , \field availability schedule
        \type object-list
        \object-list ScheduleNames
   A3 , \field Zone name (name of zone system is serving)
        \type object-list
        \object-list ZoneNames
   A4 , \field Surface name (name of surface system is embedded in)
        \type object-list
        \object-list SurfaceNames
   N1 , \field maximum electrical power to panel
        \units W
        \minimum 0
   A5 , \field temperature control type (temperature on which unit is controlled)
        \type choice
        \key MAT
        \key MRT
        \key OPERATIVE
        \default MAT
   N2 , \field heating throttling range
        \minimum 0
        \default 0
   A6 ; \field heating setpoint temperature schedule
        \type object-list
        \object-list ScheduleNames
```

An example IDF with an electric low temperature radiant system is shown below.

```
    LOW TEMP RADIANT SYSTEM:ELECTRIC, Zone 2 Radiant Floor,
         RadiantPanelAvailSched ,    ! Availability schedule
         EAST ZONE ,                 ! Zone name (name of zone system is serving)
         Zn002:Flr001 ,              ! Surface name (name of surface system is embedded in)
         10000 ,                     ! maximum electrical power to panel (in Watts)
         MAT,                        ! control type (control on mean air temperature)
         2.0 ,                       ! heating throttling range (in C)
         Radiant Heating Setpoints ; ! heating setpoint temperatures
```

Electric Low Temperature Radiant System Outputs

```
HVAC,Average, Electric Low Temp Radiant Electric Power[W]
HVAC,Sum, Electric Low Temp Radiant Electric Consumption[J]
```

Field: Electric Low Temp Radiant Electric Power [W]

This field reports the rate at which electric energy is “burned” in the low temperature radiant system in Watts. This is the heat source to the surface that is defined as the radiant system. The heating rate is determined by the zone conditions and the control scheme defined in the user input.

Field: Electric Low Temp Radiant Electric Consumption [J]

This field reports the amount of electric energy “burned” in the low temperature radiant system in Joules. This is the heat source to the surface that is defined as the radiant system. The heating rate is determined by the zone conditions, the control scheme defined in the user input, and the time step.

High Temp Radiant System

The high temperature radiant system (gas-fired or electric) is a component of zone equipment that is intended to model any “high temperature” or “high intensity” radiant system where electric resistance or gas-fired combustion heating is used to supply energy (heat) to a building occupants directly as well as the building surfaces (wall, ceiling, or floor). The

component is controlled to meet any remaining zone heating load not met by other equipment in the zone that have higher heating priority. The control is accomplished by varying the electrical power supplied to or gas consumed by the unit. It is not intended to simulate low temperature electric or hydronic radiant systems. Those devices will be handled by a separate model and different input syntax (ref: Low Temp Radiant System:Hydronic and Low Temp Radiant System:Electric). The input data dictionary definition of a high temperature radiant system is as follows.

Field: Name of high temperature radiant system

This field is an unique user assigned name for an instance of the high temperature radiant system. Any reference to this unit by another object will use this name.

Field: Availability schedule

This field is the name of the schedule (ref: Schedule) that denotes whether the high temperature radiant system can operate during a given hour. A schedule value greater than 0 (usually 1 is used) indicates that the unit is available and can be on during the hour. A value less than or equal to 0 (usually 0 is used) denotes that the unit is not available and must be off for the hour.

Field: Zone name

This field is the name of the zone (Ref: Zone) in which the high temperature radiant system is principally located and intended to affect.

Field: Maximum input power

This field is the maximum amount of energy (rate) that can be converted to heat in this particular radiant system in Watts. The controls for the radiant system will vary the amount of power supplied to the surface between zero input and the maximum power specified in this field as the lower and upper bounds, respectively.

Field: Type of high temperature radiant heater

This field denotes the type of high temperature radiant heater: gas or electric. The user must specify this by inputting either the keyword “GAS” or “ELECTRIC” for this field.

Field: Combustion efficiency

This field is the combustion efficiency for a gas high temperature radiant heater. This value should be greater than 0 and less than or equal to 1. It is intended to take into account any potential inefficiencies in the combustion process inside the radiant heater. The heater gas consumption is the ratio of heater output over the combustion efficiency. This parameter has no meaning for an electric high temperature radiant heater and is ignored when the previous field is equal to “ELECTRIC”.

Field: Fraction radiant

This field specifies what fraction of the power input to the high temperature radiant heater is actually radiant heat transfer. The fraction should be between 0 and 1. In conjunction with the next two parameters, it defines the breakdown of how the power input to the heater is distributed to the rest of the zone. The sum of these fractions must be less than or equal to 1. If the fractions are less than one, the remaining energy is added to the zone as convective heat transfer. The radiant heat transfer from the heat is distributed to people and surfaces using the distribution fractions listed below.

Field: Fraction latent

This field specifies the fraction of the power input to the high temperature radiant heater that is converted to a latent heat gain within the space. This may be appropriate when a combustion process produces moisture that is transferred into the space. The latent heat addition from a high temperature radiant heater is handled as any other latent heat gain within the space, affecting the moisture balance on the zone air.

Field: Fraction lost

This field specifies the fraction of power input to the high temperature radiant heater that is "lost". This energy is a loss term, and this fraction of the input power has no effect on the zone heat balances.

Field: Temperature control type

This field specifies along with the throttling range and setpoint schedules how the user wishes to control the high temperature radiant system. The temperature denoted in the setpoint schedule can refer to one of three different temperatures: a mean air temperature, a mean radiant temperature, or an operative temperature. The choice of temperature is controlled by the current field—temperature control type. The user must select from the following options: MAT, MRT, or OPERATIVE. If the user does not select a control type, OPERATIVE control is assumed by EnergyPlus. See the throttling range and control temperature schedule fields below for more information.

Field: Heating throttling range

This field specifies the range of temperature in degrees Celsuis over which the radiant system throttles from zero heat input via the electric resistance wires up to the maximum defined by the maximum electrical power field described above. The throttling range parameter is used in conjunction with the control temperature (see below) to define the response of the system to various zone conditions. The heating control temperature schedule specifies the "setpoint" temperature where the power input to the system is at half of the maximum power input. For example, if the heating control temperature setpoint is currently 15°C and the heating throttling range is 2°C, the electrical power supplied to the radiant system will be zero when the controlling temperature (MAT, MRT, or Operative Temperature; see control type field above) is at or above 16°C and the maximum power input when the controlling temperature is at or below 14°C. This represents a throttling range of 2°C around the setpoint of 15°C. In between 14°C and 16°C, the power input to the radiant system is varied linearly.

Field: Heating setpoint temperature schedule

This field specifies the heating setpoint or control temperature for the radiant system in degrees Celsius. Used in conjunction with the previous field (heating throttling range), it will define whether or not the system is running and the current power input to the radiant surface. Power input to the system is varied linearly around the setpoint temperature based on the throttling range and the maximum electrical power parameters (see above). It should be noted that this control schedule will allow different setpoint temperatures throughout the year for heating. In addition, this schedule may be different that the thermostatic control schedule defined for overall operation of components serving the zone in which the radiant system is located. The thermostatic control determines whether or not there is a heating or cooling load in the space and thus whether the systems should be operating. This field simply controls the flow rate to the radiant system.

Field: Fraction of radiant energy incident on people

This field specifies the fraction of radiant heat transfer to the zone from the radiant heater that is incident directly on people within the space. This has an impact on the predicted thermal comfort of the zone occupants. Note that since the thermal comfort models only use the results of the zone heat balances this energy is accounted for within the heat balance as convective energy, directly affecting the zone air heat balance. The basic assumption here is that most radiant energy falling on people will most likely be convected to the surroundings. This is a simplification of reality, but it maintains the overall energy balance.

Field: Surface to which radiant energy from heater is distributed

This field is the name of the first surface to which radiant heat transfer from the high temperature radiant heater is distributed. Used in conjunction with the next field, it helps to define the distribution of the radiant energy on the surfaces within the zone. Note that up to 20 pairs of surface names and corresponding fractions may be entered for a single radiant heater system.

Field: Fraction of radiant energy from heater distributed to surface

This field is paired with the preceding surface name (previous field) to define the fraction of radiant heat transfer leaving the high temperature radiant system that is incident on a particular surface. Users should take into account the directionality of high temperature radiant heaters and their location when defining the value for this input field. Note that the sum of all fractions plus the fraction of radiant energy incident on people must add up to less than or equal to 1.

```
HIGH TEMP RADIANT SYSTEM,
   A1 , \field name of high temperature radiant system
   A2 , \field availability schedule
        \type object-list
        \object-list ScheduleNames
   A3 , \field Zone name (name of zone system is serving)
        \type object-list
        \object-list ZoneNames
   N1 , \field maximum power input
        \units W
        \minimum 0
   A4 , \field type of high temperature radiant heater (gas or electric)
        \type choice
        \key GAS
        \key ELECTRIC
   N2 , \field combustion efficiency (ignore for non-gas radiant heaters)
        \minimum 0
        \maximum 1
   N3 , \field fraction of input converted to radiant energy
        \note N3, N4, and N5 must sum to 1 or less; remainder is considered convective heat
        \minimum 0
        \maximum 1
   N4 , \field fraction of input converted to latent energy
        \minimum 0
        \maximum 1
   N5 , \field fraction of input that is lost (vented to outside environment)
        \minimum 0
        \maximum 1
   A5 , \field temperature control type (temperature on which unit is controlled)
        \type choice
        \key MAT
        \key MRT
        \key OPERATIVE
        \default OPERATIVE
```

```
N6 , \field heating throttling range
     \units degrees C
     \minimum 0
A6 , \field heating setpoint temperature schedule
     \note this setpoint is an "operative temperature" setpoint
     \type object-list
     \object-list ScheduleNames
N7,  \field fraction of radiant energy incident on people
     \note this will affect thermal comfort but from an energy balance standpoint this value
     \note gets added to the convective gains from the radiant heater
     \minimum 0
     \maximum 1
A7,  \field surface to which radiant energy from heater is distributed 1
     \type object-list
     \object-list SurfaceNames
N8,  \field fraction of radiant energy from heater distributed to surface 1
     \minimum 0
     \maximum 1
A8,  \field surface to which radiant energy from heater is distributed 2
     \type object-list
     \object-list SurfaceNames
N9,  \field fraction of radiant energy from heater distributed to surface 2
     \minimum 0
     \maximum 1
A9,  \field surface to which radiant energy from heater is distributed 3
     \type object-list
     \object-list SurfaceNames
N10, \field fraction of radiant energy from heater distributed to surface 3
     \minimum 0
     \maximum 1
A10, \field surface to which radiant energy from heater is distributed 4
     \type object-list
     \object-list SurfaceNames
N11, \field fraction of radiant energy from heater distributed to surface 4
     \minimum 0
     \maximum 1
A11, \field surface to which radiant energy from heater is distributed 5
     \type object-list
     \object-list SurfaceNames
N12, \field fraction of radiant energy from heater distributed to surface 5
     \minimum 0
     \maximum 1
A12, \field surface to which radiant energy from heater is distributed 6
     \type object-list
     \object-list SurfaceNames
N13, \field fraction of radiant energy from heater distributed to surface 6
     \minimum 0
     \maximum 1
A13, \field surface to which radiant energy from heater is distributed 7
     \type object-list
     \object-list SurfaceNames
N14, \field fraction of radiant energy from heater distributed to surface 7
     \minimum 0
     \maximum 1
A14, \field surface to which radiant energy from heater is distributed 8
     \type object-list
     \object-list SurfaceNames
N15, \field fraction of radiant energy from heater distributed to surface 8
     \minimum 0
     \maximum 1
A15, \field surface to which radiant energy from heater is distributed 9
     \type object-list
     \object-list SurfaceNames
N16, \field fraction of radiant energy from heater distributed to surface 9
     \minimum 0
     \maximum 1
A16, \field surface to which radiant energy from heater is distributed 10
     \type object-list
     \object-list SurfaceNames
N17, \field fraction of radiant energy from heater distributed to surface 10
     \minimum 0
```

```
      \maximum 1
A17, \field surface to which radiant energy from heater is distributed 11
      \type object-list
      \object-list SurfaceNames
N18, \field fraction of radiant energy from heater distributed to surface 11
      \minimum 0
      \maximum 1
A18, \field surface to which radiant energy from heater is distributed 12
      \type object-list
      \object-list SurfaceNames
N19, \field fraction of radiant energy from heater distributed to surface 12
      \minimum 0
      \maximum 1
A19, \field surface to which radiant energy from heater is distributed 13
      \type object-list
      \object-list SurfaceNames
N20, \field fraction of radiant energy from heater distributed to surface 13
      \minimum 0
      \maximum 1
A20, \field surface to which radiant energy from heater is distributed 14
      \type object-list
      \object-list SurfaceNames
N21, \field fraction of radiant energy from heater distributed to surface 14
      \minimum 0
      \maximum 1
A21, \field surface to which radiant energy from heater is distributed 15
      \type object-list
      \object-list SurfaceNames
N22, \field fraction of radiant energy from heater distributed to surface 15
      \minimum 0
      \maximum 1
A22, \field surface to which radiant energy from heater is distributed 16
      \type object-list
      \object-list SurfaceNames
N23, \field fraction of radiant energy from heater distributed to surface 16
      \minimum 0
      \maximum 1
A23, \field surface to which radiant energy from heater is distributed 17
      \type object-list
      \object-list SurfaceNames
N24, \field fraction of radiant energy from heater distributed to surface 17
      \minimum 0
      \maximum 1
A24, \field surface to which radiant energy from heater is distributed 18
      \type object-list
      \object-list SurfaceNames
N25, \field fraction of radiant energy from heater distributed to surface 18
      \minimum 0
      \maximum 1
A25, \field surface to which radiant energy from heater is distributed 19
      \type object-list
      \object-list SurfaceNames
N26, \field fraction of radiant energy from heater distributed to surface 19
      \minimum 0
      \maximum 1
A26, \field surface to which radiant energy from heater is distributed 20
      \type object-list
      \object-list SurfaceNames
N27; \field fraction of radiant energy from heater distributed to surface 20
      \minimum 0
      \maximum 1
```

An example IDF with a high temperature radiant system is shown below.

```
HIGH TEMP RADIANT SYSTEM, Zone 2 Radiant Heater,
     RadiantPanelAvailSched ,   ! Availability schedule
     EAST ZONE ,                ! Zone name (name of zone system is serving)
     10000 ,                    ! maximum power input (in Watts)
     GAS,                       ! type of heater (either gas or electric)
     0.8,                       ! combustion efficiency (ignored for electric radiant heaters)
     0.80,                      ! fraction radiant
     0.00,                      ! fraction latent
     0.00,                      ! fraction lost
     OPERATIVE,                 ! temperature control type (controls on operative temperature)
     2.0 ,                      ! heating throttling range (in C)
     Radiant Heating Setpoints, ! heating setpoint temperatures
     0.04,                      ! fraction of radiant energy that is incident directly on people
     Zn002:Flr001, 0.80,        ! fraction of radiant energy that is incident on the surface indicated
     Zn002:Wall001, 0.04,       ! fraction of radiant energy that is incident on the surface indicated
     Zn002:Wall002, 0.04,       ! fraction of radiant energy that is incident on the surface indicated
     Zn002:Wall003, 0.04,       ! fraction of radiant energy that is incident on the surface indicated
     Zn002:Wall004, 0.04;       ! fraction of radiant energy that is incident on the surface indicated
```

High Temperature Radiant System Outputs

```
HVAC,Average, High Temperature Radiant Heating Rate[W]
HVAC,Sum, High Temperature Radiant Heating Energy[J]
HVAC,Average, High Temperature Radiant Gas Consumption Rate[W]
HVAC,Sum, High Temperature Radiant Gas Consumption[J]
HVAC,Average, High Temperature Radiant Electric Power[W]
HVAC,Sum, High Temperature Radiant Electric Consumption [J]
```

Field: High Temperature Radiant Heating Rate[W]

This field reports the rate at which energy is transferred from the high temperature radiant system to the zone in Watts. This rate is determined by the zone conditions and the control scheme defined in the user input. Note that this amount takes into account any combustion inefficiency and thus could be different that the gas consumption rate in a high temperature gas radiant system.

Field: High Temperature Radiant Heating Energy[J]

This field reports the amount of energy transferred from the high temperature gas radiant system to the zone in Joules. This amount is determined by the zone conditions, the control scheme defined in the user input, and the time step. Note that this amount takes into account any combustion inefficiency and thus could be different that the gas consumption in a high temperature gas radiant system.

Field: High Temperature Radiant Gas Consumption Rate[W]

This field reports the rate at which gas is “burned” in a high temperature gas radiant system in Watts. This rate is determined by the zone conditions and the control scheme defined in the user input.

Field: High Temperature Radiant Gas Consumption[J]

This field reports the amount of gas “burned” in a high temperature gas radiant system in Joules. This amount is determined by the zone conditions, the control scheme defined in the user input, and the time step.

Field: High Temperature Radiant Electric Power[W]

This field reports the rate at which electric energy is “burned” in a high temperature electric radiant system in Watts. This rate is determined by the zone conditions and the control scheme defined in the user input.

Field: High Temperature Radiant Electric Consumption[J]

This field reports the amount of electric energy "burned" in a high temperature electric radiant system in Joules. This amount is determined by the zone conditions, the control scheme defined in the user input, and the time step.

Group – System Availability Managers

System Availability Managers are one of the high-level control constructs in EnergyPlus. A System Availability Manager is able to access data from any of the HVAC system nodes and use this data to to make a decsion on whether an entire system should be on or off.

System Availability Managers are executed at the start of each HVAC time step. They reside outside the HVAC system iteration loops. Thus, the System Availability Managers are executed once per HVAC time step, and they use previous time step information (except for zone load) to calculate their set points

System Availability Manager:Scheduled

The simplest System Availability Manager is when the availability is determined by an on/off shcedule.The syntax for implementing such an availability manager is shown below. The identifying name refers back to the name recorded in the SYSTEM AVAILABILITY MANAGER LIST statement described in the **Group – Air Distribution** section. The schedule must be the name of a schedule defined elsewhere in the input.

Field: Name

The unique, user assigned name of an instance of a scheduled system availability manager. Other objects that use this scheduled system availability manager will reference it by this name.

Field: Schedule name

The name of a schedule defined elsewhere in the input. Schedule values greater than zero (usually 1 is used) indicate that the system is on. Schedule values less than or equal to zero (usually 0 is used) denote that the system is off. This schedule overides the central fan schedule for determining whether the fan is on.

The IDD specification:

```
SYSTEM AVAILABILITY MANAGER:SCHEDULED,
       \min-fields 2
       \memo Determines the availability of a loop or system: whether it is on or off.
       \memo Schedule overides fan schedule for switching on fans.
  A1 , \field Name
       \required-field
       \type alpha
       \reference SystemAvailabilityManagers
  A2 ; \field Schedule name
       \required-field
       \type object-list
       \object-list ScheduleNames
```

An example of this statement in an IDF is:

```
SYSTEM AVAILABILITY MANAGER:SCHEDULED,
    VAV Sys 1 Avail,
    FanAvailSched;
```

System Availability Manager:Night Cycle

This manager is used for cycling on an air system when one or more zones become too hot or too cold. The usual situation is that the central air handler is turned off at night. However if the building gets too cold there might be condensation on the walls and other damage. Thus the control system is usually programmed to turn the system on if 1 control thermostat or any thermostat shows a zone temperature of less than a night time set point. Similarly there might be a concern about a building getting too hot. Again the control system is programmed to turn the air handler back on if one or any zone temperature exceeds a night time cooling set point.

This object gives the user considerable flexibility in determining how the night time on/off decision will be made. The manager can look at the temperature in 1 zone or it can sample all the zones connected to the air handler. The user can specify a temperature tolerance and a run time for the system once it switches on. There is also an applicability schedule – the user can schedule whether or not the System Availability Manager itself is being applied.

Field: Name

A unique, user assigned name for an instance of a night cycle system availability manager. Other objects that use this system availability manager will reference it by this name.

Field: Applicability schedule name

The name of a schedule defined elsewhere in the input file. This schedule determines whether or not for a given hour this system availability manager is to be applied. . Schedule values greater than zero (usually 1 is used) indicate the system availability manager is to be applied this hour. Schedule values less than or equal to zero (usually 0 is used) denote that the availability manager is not used this hour.

Field: Fan schedule name

The name of the central fan on/off schedule for the air system that this system availability manager will affect.

Field: Control type

The possible inputs are *Stay Off*, *Cycle On Any*, *Cycle On Control Zone*, *Cycle On Any - Zone Fans Only*. *Stay Off* means the system availability manager will have no effect – air handler on/off will be determined by the fan schedule. *Cycle On Any* means that if any zone served by a system whose System Availability Manager List references this system availability manager has an air temperature outside the cooling or heating set points the central fan will turn on even though the fan schedule indicates the fan is off. *Cycle On Control Zone* means the same thing except the availability manager looks at the temperature in only one zone. *Cycle On Any - Zone Fans Only* is the same as *Cycle On Any* except that only the zone fans are cycled on and the central air handler fan is left off. The default is *Stay Off*.

Field: thermostat on/off tolerance

This is the amount in degrees Celsius by which the zone temperature must exceed the cooling set point or fall below the heating set point in order for the availability manager to signal that the system should turn on.The default is 1 degree C.

Field: Cycling run time

The time in seconds for which the system will run after it has cycled on. The default is 3600 seconds (1 hour).

Field: Control zone name

For the option *Cycle On Control Zone* this is the name of the control zone.

The IDD specification:

```
SYSTEM AVAILABILITY MANAGER:NIGHT CYCLE,
       \min-fields 6
       \memo Determines the availability of a loop or system: whether it is on or off.
       \memo Overides fan schedules.
       \memo Depending on zone temperatures, forces system fans on.
  A1 , \field Name
       \required-field
       \type alpha
       \reference SystemAvailabilityManagers
  A2 , \field Applicability schedule name
       \required-field
       \type object-list
       \object-list ScheduleNames
  A3 , \field Fan schedule name
       \required-field
       \type object-list
       \object-list ScheduleNames
  A4 , \field Control type
       \type choice
       \key Stay Off
       \key Cycle On Any
       \key Cycle On Control Zone
       \key Cycle On Any - Zone Fans Only
       \default Stay Off
  N1 , \field thermostat on/off tolerance
       \default 1.0
       \units delK
  N2 , \field Cycling run time
       \default 3600.
       \units s
  A5 ; \field Control zone name
       \type object-list
       \object-list ZoneNames
```

An example of this statement in an IDF is:

```
SYSTEM AVAILABILITY MANAGER:NIGHT CYCLE,
    VAV Sys 1 Avail,     ! Name
    SysAvailApplicSch,   ! Manager applicability schedule
    FanAvailSched,       ! Fan schedule
    Cycle On Any,        ! Control type
    4.0,                 ! Temperature tolerance (delta C)
    7200.;               ! Cycle on time period (s)
```

Group – Set Point Managers

Set Point Managers are one of the high-level control constructs in EnergyPlus. A Set Point Manager is able to access data from any of the HVAC system nodes and use this data to calculate a set point (usually a temperature set point) for one or more other HVAC system nodes. Set points are then used by Controllers as a goal for their control actions.

Set Point Managers are executed at the start of each HVAC time step, and they reside outside the HVAC system iteration loops. Thus, the Set Point Managers are executed once per HVAC time step, and they use previous time step information (except for zone load) to calculate their set points.

Set Point Manager:Scheduled

The simplest Set point Manger simply uses a schedule to determine one or more set points. No node data is used as input. The input consists of the Set Point Manager name, the type of

controlled variable, the schedule name, and the name of a node list. The node list contains the name of those nodes at which the set point is to be applied. Of course, a node list name can always be simply the name of a single node.

Field: Name

A unique, user assigned name for an instance of a scheduled set point manager. Anywhere in the input that this set point manager is used, it is referred to by this name.

Field: Control variable

The type of variable that will be controlled. The choices are: TEMP (temperature), HUMRAT humidity ratio), or FLOW (mass flow rate). For this type of set point manager, this field should be TEMP.

Field: Schedule Name

The name of a schedule whose values are temperatures in ^{o}C. These schedule value for the hour is the set point for this type of set point manager.

Field: Name of the Set Point Node List

The name of a Node List object containing the names of the HVAC system nodes for which temperature set points will be established by this set point manager.

Below is the Input Data Dictionary definition of a Scheduled Set Point Manager.

```
SET POINT MANAGER:SCHEDULED,
       \memo We have a two level hierarchy: Set Point Managers and Controllers.  Set
       \memo Point Managers are simulated at a high level - they resemble the function
       \memo of an Energy Management System.  A Set Point Manager can sense any node
       \memo variables and use them to determine the set point of any other node variables.
  A1 , \field Name
       \required-field
  A2 , \field Control variable
       \type choice
       \key TEMP
       \key HUMRAT
       \key FLOW
  A3 , \field Schedule Name
       \type object-list
       \object-list ScheduleNames
  A4 ; \field Name of the set point Node List
       \note Node(s) at which temperature will be set
```

Following is an example of the input for a Scheduled Set Point Manager.

```
SET POINT MANAGER:SCHEDULED, Supply Air Temp Manager,
      TEMP, Seasonal Reset Supply Air Temp Sch, Supply Air Temp Nodes;

  NODE LIST, Supply Air Temp Nodes,
      Air Loop Outlet Node; ! Set Point Node
```

Set Point Manager:Outside Air

The Outside Air Set Point Manager sets the supply air temperature according to the outside air temperature using a reset rule. The reset rule is determined by 2 points: the supply air set point temperature at the outside high (SATOH) and the supply air set point temperature at the outside low (SATOL). If the outside temperature is above the outside high, the supply air temperature is set to SATOH. If the outside temperature is below the outside low, the supply air temperature is set to SATOL. If the outside temperature is between the outside high and outside low, the supply air temperature is linearly interpolated between SATOH and SATOL.

The input consists of the Outside Air Set Point Manager name, the type of controlled variable, a node list name of the nodes affected by the set point, and the data for the reset rule: the

supply air set point temperature at the outside low, the outside low, the supply air set point temperature at the outside high, and the outside high.

There is optional input for a second reset rule. First there is the name of a schedule that indicates which rule to use: a value of 1 means use the first rule; a value of 2 means use the second. Next, there are the 4 inputs specifying the second reset rule.

Field: Name

A unique, user assigned name for an instance of an outside air set point manager. Anywhere in the input that this set point manager is used, it is referred to by this name.

Field: Control variable

The type of variable that will be controlled. The choices are: TEMP (temperature), HUMRAT humidity ratio), FLOW (mass flow rate), PRESSURE, or ENTHALPY (specific enthalpy). For this type of set point manager, this field should be TEMP.

Field: Set point at outside low

The supply air temperature set point in ^{o}C at the outside air low for the first reset rule.

Field: Outside low

The outside air low temperature in ^{o}C for the first supply air temperature reset rule. Generally, at this outside air temperature the supply temperature is at its maximum.

Field: Set point at outside high

The supply air temperature set point in ^{o}C at the outside air high for the first reset rule.

Field: Outside high

The outside air high temperature in ^{o}C for the first supply air temperature reset rule. Generally, at this outside air temperature the supply temperature is at its minimum.

Field: Name of the Set Point Node List

The name of a Node List object containing the names of the HVAC system nodes for which temperature set points will be established by this set point manager.

Field: Schedule name

The name of a schedule whose values indicate which reset rule to use. Schedule values of 1 indicate that the first reset will be used. Schedule values of 2 select the second reset rule.

Field: Set point at outside low

The supply air temperature set point in ^{o}C at the outside air low for the second reset rule

Field: Outside low

The outside air low temperature in ^{o}C for the second supply air temperature reset rule. Generally, at this outside air temperature the supply temperature is at its maximum.

Field: Set point at outside high

The supply air temperature set point in ^{o}C at the outside air high for the second reset rule.

Field: Outside high

The outside air high temperature in ^{o}C for the second supply air temperature reset rule. Generally, at this outside air temperature the supply temperature is at its minimum.

Following is the Input Data Dictionary description of the Outside Air Set Point Manager

```
SET POINT MANAGER:OUTSIDE AIR,
       \memo We have a two level hierarchy: Set Point Managers and Controllers.  Set
       \memo Point Managers are simulated at a high level - they resemble the function
       \memo of an Energy Management System.  A Set Point Manager can sense any node
       \memo variables and use them to determine the set point of any other node variables.
  A1 , \field Name
       \required-field
  A2 , \field Control variable
       \type choice
       \key TEMP
       \key HUMRAT
       \key FLOW
   ! Outside air temp reset rule
  N1 , \field Set point at outside low
       \units C
  N2 , \field Outside low
       \units C
  N3 , \field Set point at outside high
       \units C
  N4 , \field Outside high
       \units C
  A3 , \field Name of the set point Node List
       \note Node(s) at which temperature will be set
   !
   ! Optional input
   !
   ! Schedule allows scheduling of the outside air reset rule - a schedule value
   ! of 1 means use the first rule; a value of 2 means use the second rule.
  A4 , \field Schedule name
       \type object-list
       \object-list ScheduleNames
   ! 2nd outside air temp reset rule
  N5 , \field Set point at outside low
       \units C
  N6 , \field Outside low
       \units C
  N7 , \field Set point at outside high
       \units C
  N8 ; \field Outside high
       \units C
```

Below is an example of the input for a Outside Air Set Point Manager

```
SET POINT MANAGER:OUTSIDE AIR, Supply Air Temp Manager 1,
      TEMP,
      16.7, ! set temp at outside low
      0.0,  ! outside low
      12.8, ! set temp at outside high
      32.0, ! outside high
      Supply Air Temp Nodes;

  NODE LIST, Supply Air Temp Nodes,
      Air Loop Outlet Node; ! Set Point Node
```

Set Point Manager:SingleZone Reheat

The Single Zone Reheat Set Point Manager allows the simulation of a single zone reheat system. The Set Point Manager detects the control zone load, zone inlet node flow rate, and zone node temperature and calculates a set point temperature for the supply air that will satisfy the zone load for the control zone. This set point manager creates a variable temperature system. The input consists of the Single Zone Reheat Set Point Manager name, the controlled variable type, the minimum and maximum supply air temperatures, the name of

the control zone, the name of the control zone node, the name of the control zone inlet node, and the name of a node or node list containing the nodes whose temperatures are to be set.

Field: Name

A unique, user assigned name for an instance of a single zone reheat set point manager. Anywhere in the input that this set point manager is used, it is referred to by this name.

Field: Control variable

The type of variable that will be controlled. The choices are: TEMP (temperature), HUMRAT (humidity ratio), or FLOW (mass flow rate). For this type of set point manager, this field should be TEMP.

Field: minimum supply air temperature

The minimum supply air temperature (in ^{o}C) that is allowed for this system (as set by this set point manager).

Field: maximum supply air temperature

The maximum supply air temperature (in ^{o}C) that is allowed for this system (as set by this set point manager)

Field: zone name of the control zone

The name of the control zone for this single zone reheat system. The heating or cooling load of this zone determines the supply air temperature set point.

Field: node name of zone node

The name of the zone node of the control zone.

Field: node name of zone inlet node

The name of the zone inlet node that is supplying air to the control zone.

Field: Name of the Set Point Node or Node List

The name of a Node or Node List object containing the names of the HVAC system nodes for which temperature set points will be established by this set point manager.

The following shows the Input Data Dictionary description of the Single Zone Reheat Set Point Manager.

```
SET POINT MANAGER:SINGLE ZONE REHEAT,
       \memo We have a two level hierarchy: Set Point Managers and Controllers.  Set
       \memo Point Managers are simulated at a high level - they resemble the function
       \memo of an Energy Management System.  A Set Point Manager can sense any node
       \memo variables and use them to determine the set point of any other node variables.
  A1 , \field Name
       \required-field
  A2 , \field Control variable
       \type choice
       \key TEMP
       \key HUMRAT
       \key FLOW
  N1 , \field minimum supply air temperature
       \units C
  N2 , \field maximum supply air temperature
       \units C
  A3 , \field zone name of the control zone
       \type object-list
       \object-list ZoneNames
  A4 , \field node name of zone node
  A5 , \field node name of zone inlet node
  A6 ; \field Name of the set point Node or Node List
       \note Node(s) at which the temperature will be set
```

Below is an example input for a Single Zone Reheat Set Point Manager.

```
SET POINT MANAGER:SINGLE ZONE REHEAT,
      Supply Air Temp Manager,
      TEMP,
      13.,
      45.,
      NORTH ZONE,
      Zone 3 Node,
      Zone 3 Inlet Node,
      Supply Air Temp Nodes;

  NODE LIST, Supply Air Temp Nodes,
      Heating Coil Air Inlet Node, Air Loop Outlet Node; ! Set Point Node
```

Set Point Manager:Single Zone Min Hum

The Single Zone Minimum Humidity Set Point Manager allows the control of a single zone minimum humidity level. The set point manager detects the humidity level in a control zone and using air and moisture mass balance calculates the supply air humidity ratio needed to maintain the zone relative humidity at or above a given set point. The calculated supply air humidity ratio is then entered as a set point on a designated supply air stream node. A humidifier component placed upstream of this node can then use the humidity ratio set point to control its moisture addition rate.

Field: Name

A unique, user assigned name for an instance of a single zone minimum humidity set point manager. Anywhere in the input that this set point manager is used, it is referred to by this name.

Field: Control variable:

The type of variable that will be controlled. The choices are: TEMP (temperature), HUMRAT (humidity ratio), or FLOW (mass flow rate). For this type of set point manager this input should be HUMRAT.

Field: Schedule name

The name of a schedule whose values represent the minimum relative humidity set point of the humidity control zone. The scheduled relative humidity set point values should be a fraction from 0.0 to 1.0.

Field: Name of the Set Point Node or Node List

The name of the HVAC system node at which the calculated humidity ratio set point is set. If the set point is being placed on more than one node, this input should be the name of a Node List.

Field: Name of Control Zone Node

The name of the zone node of the humidity control zone.

IDD description:

```
SET POINT MANAGER:SINGLE ZONE MIN HUM,
       \memo We have a two level hierarchy: Set Point Managers and Controllers.  Set
       \memo Point Managers are simulated at a high level - they resemble the function
       \memo of an Energy Management System.  A Set Point Manager can sense any node
       \memo variables and use them to determine the set point of any other node variables.
  A1 , \field Name
  A2 , \field Control variable:
       \type choice
       \key TEMP
       \key HUMRAT
       \key FLOW
  A3 , \field Schedule name
       \type object-list
       \object-list ScheduleNames
       \note schedule values are zone minimum relative humidities (fraction)
  A4 , \field Name of the set point Node or Node List
       \note Node at which humidity will be set
  A5 ; \field Name of a Node List (or Node)
       \note zone nodes of zones whose humidity is being controlled
```

An IDF example:

```
  SET POINT MANAGER:SINGLE ZONE MIN HUM,
    Zone Min Set Point Manager,
    HUMRAT,
    Min Relative Hum Set Sch,
    Air Loop Outlet Node,
    Zone 2 Node;
```

Set Point Manager:Mixed Air

The Mixed Air Set Point Manager is meant to be used in conjunction with an Outside Air Controller. The Mixed Air Set Point Manager is used to establish a temperature set point at the mixed air node. The Outside Air Controller then operates the outside air damper to attempt to meet this set point.

In EnergyPlus the relief and outside air dampers, the economizer, and any outside air conditioning equipment form a separate subsystem of a primary air system. The outside air controller operates within the subsystem. Consequently the mixed air temperature set point must take into account any downstream system fan heat if it is to meet a desired system supply air leaving temperature. The Mixed Air Set Point Manager accomplishes this by referencing a supply air set point set by another set point manager (most likely at the primary air system exit node). The supply fan inlet and exit nodes are also inputs to the Mixed Air Set Point Manager. From this information the Mixed Air Set Point Manager calculates the supply

fan air temperature rise, subtracts it from the reference set point temperature and uses the result as the mixed air node set point temperature.

Of course any type of set point manager can be used to establish a temperature set point at the mixed air node. But the Mixed Air Set Point Manager is likely to be the most useful.

Field: Name

A unique, user assigned name for an instance of a mixed air set point manager. Anywhere in the input that this set point manager is used, it is referred to by this name.

Field: Control variable:

The type of variable that will be controlled. The choices are: TEMP (temperature), HUMRAT (humidity ratio), or FLOW (mass flow rate). For this type of set point manager this input should be TEMP

Field: Reference set point node name

The name of a primary air system node at which the system supply air temperature is set. Normally this would be the primary air system exit node. The temperature set point at this reference node is set by a different set point manager.

Field: Fan inlet node name

The name of the supply fan inlet node.

Field: Fan outlet node name

The name of the supply fan outlet node.

Field: Name of the Set Point Node or Node List

The name of a Node or Node List object containing the names of the HVAC system nodes for which temperature set points will be established by this set point manager.

The following shows the Input Data Dictionary description of the Mixed Air Set Point Manager.

```
SET POINT MANAGER:MIXED AIR,
  A1 , \field Name
       \required-field
  A2 , \field Control variable:
       \type choice
       \key TEMP
       \key HUMRAT
       \key FLOW
  A3 , \field reference set point node name
  A4 , \field fan inlet node name
  A5 , \field fan outlet node name
  A6 ; \field Name of the set point Node or Node List
       \note Node(s) at which the temperature will be set
```

Below is an example input for a Mixed Air Set Point Manager.

```
SET POINT MANAGER:SINGLE ZONE REHEAT, ! establishes the set point at the system exit node
      Supply Air Temp Manager,
      TEMP,
      13.,
      45.,
      NORTH ZONE,
      Zone 3 Node,
      Zone 3 Inlet Node,
      Supply Air Temp Nodes;
  SET POINT MANAGER:MIXED AIR, ! uses the system exit set point to establish the mixed air set point
      Mixed Air Temp Manager 1,
      TEMP,
      Air Loop Outlet Node,          ! reference node
      Heating Coil Air Outlet Node,  ! fan inlet node
      Air Loop Outlet Node,          ! fan outlet node
      Mixed Air Nodes;

  NODE LIST, Supply Air Temp Nodes,
      Air Loop Outlet Node; ! Set Point Nodes
  NODE LIST, Mixed Air Nodes,
      Mixed Air Node; ! Set Point Nodes
```

Set Point Manager:Warmest

The Warmest Set Point Manager resets the cooling supply air temperature of a central forced air HVAC system according to the cooling demand of the warmest zone. For each zone in the system at each system time step the manager calculates a supply air temperature that will meet the zone cooling load at the maximum zone supply air flow rate. The lowest of the possible supply air temperatures becomes the new supply air temperature set point, subject to minimum and maximum supply air temperature constraints. The resulting temperature set point is the highest supply air temperature that will meet the cooling requirements of all the zones. When compared to a fixed cooling supply air temperature set point, this strategy minimizes zone reheat coil energy (or overcooling) and central chiller energy consumption (if the chilled water temperature is also reset) at the cost of possible increased fan energy.

Field: Name

A unique, user assigned name for an instance of a warmest set point manager. Anywhere in the input that this set point manager is used, it is referred to by this name.

Field: Control variable

The type of variable that will be controlled. The choices are: TEMP (temperature), HUMRAT (humidity ratio), or FLOW (mass flow rate). For this type of set point manager this input should be TEMP.

Field: AIR PRIMARY LOOP name

The name of the Air Primary Loop (the central air system) which will use this set point manager to set its cooling supply air temperature.

Field: minimum set point temperature

The minimum allowed set point temperature in degrees C. If the calculated set point temperature is less than this minimum, the set point is set to the minimum.

Field: maximum set point temperature

The maximum allowed set point temperature in degrees C. If the calculated set point is greater than this value the set point is set to the maximum. This value is also used as the set point temperature when none of the zones have a cooling load.

Field: Strategy

Right now the only choice for this field is *MaxTemp*.

Field: Name of the Set Point Node or Node List

The name of a Node or Node List object containing the names of the HVAC system nodes for which temperature set points will be established by this set point manager.

The following shows the Input Data Dictionary description of the Warmest Set Point Manager.

```
SET POINT MANAGER:WARMEST,
  A1, \field Name
      \required-field
      \reference SetPointManagers
  A2, \field Control variable:
       \type choice
       \key TEMP
       \key HUMRAT
       \key FLOW
  A3, \field name of AIR PRIMARY LOOP for which "warmest" strategy will be employed.
      \required-field
      \object-list AirPrimaryLoops
  N1, \field minimum set point temperature
       \units C
       \type real
       \Minimum> 0.0
       \Default 12.
  N2, \field maximum set point temperature
       \units C
       \type real
       \Minimum> 0.0
       \Default 18.
  A4, \field Strategy
      \type choice
      \key MaxTemp
      \default MaxTempMinFlow
  A5 ; \field Name of the set point Node or Node List
       \required
       \note Node(s) at which the temperature will be set
```

Below is an example input for a Warmest Set Point Manager.

```
SET POINT MANAGER:WARMEST,
    Supply Air Temperature Manager 1,
    TEMP,
    VAV Sys 1,
    11.2,
    16.,
    MaxTemp,
    Supply Air Temp Nodes 1;

SET POINT MANAGER:MIXED AIR,
    Mixed Air Temp Manager 1,
    TEMP,
    VAV Sys 1 Outlet Node,
    Main Heating Coil 1 Outlet Node,
    VAV Sys 1 Outlet Node,
    Mixed Air Node 1;

NODE LIST, Supply Air Temp Nodes 1,
    VAV Sys 1 Outlet Node; ! Set Point Node
```

Group – Controllers

Controls (Air Loop and Zone Equipment)

A Controller mimics the function of an actual physical controller in a somewhat rudimentary way. It can sense one node variable, compare it with its set point, and determine the desired value for another node variable. It should be noted that a controller cannot span a loop manager boundary (but a Set Point Manager can). Thus, in an air loop, the sensed node and the controlled device must be in the air loop simulation. This means that a single zone system cannot be modeled with a simple controller sensing zone temperature and controlling coil water flow. Instead this must be modeled as a Set Point Manager sensing a zone temperature and resetting the supply air temperature set point each time step. This is artificial but should simplify the control modeling task. It should also be noted that there are various types of controllers and that each controller might hook into loops in a slightly different way. As a result, each controller type is described separately below.

Controller:Simple

The simple controller is really a solution inverter. For a coil the simulation cannot be inverted where the mass flow rate of the water flow through the coil can be solved directly given an air temperature. Thus, this "controller" will numerically step through all of the water flow possibilities by an interval halving technique until the mass flow rate is determined to meet the specified outlet air temperature within a specified user tolerance.

As the reader probably noted when reading the descriptions of the coil syntax shown earlier in this section, there were no controls attached directly to a particular component. This is because the input can be simplified somewhat by entering node names to be controlled. This avoids having to search through multiple lists of component types for the sake of simply controlling components. The CONTROLLER:SIMPLE shown below is a way on controlling variables at one node based on conditions at another node. After the identifying name for the simple controller, the user must define which control variable the controller is managing. These options include TEMP (for temperature), HUMRAT (for humidity ratio), or FLOW (for mass flow rate).

The next two parameters in the input syntax are node names corresponding to the nodes which are the input and output points for the controller, respectively. These two numbers are followed by the controller convergence tolerance and the throttling range of the controller. Finally, the last two numbers represent the maximum and minimum values allowed for the actuated variable at the actuated node. For example, in the case of a cooling coil, the control variable might be the outlet air temperature of the coil while the actuated variable might be the water flow rate through the coil.

Field: Name

This is the unique name of the controller.

Field: Control variable

This was setup to be generic but to date has only been used for temperature control of water coil in the air loop simulation. The current keyword that works is TEMP for temperature. Normally specified for the coil outlet temperature.

Field: Action

The next input refers to the "action" of the control. This can be best described by an example. In a coil where water mass flow rate is to be controlled, a coil will increase the mass flow rate through the coil when more heating or cooling is requested. In a heating coil,

this increases the value of heat transfer from the water to the air stream. As a result, this is considered a “NORMAL” action controller. In a cooling coil, an increase in water mass flow rate through the coil decreases the value of heat transfer from the water to the air stream (absolute value increases, but since cooling is traditional described as a negative number, an increase in absolute value results in a decrease in the actual heat transfer value). Thus, the cooling coil controller has “REVERSE” action since an increase in flow rate results in a decrease in heat transfer

Field: Actuator variable

This was again meant to be more generic but currently has only been used to control the mass flow rate of the heating or cooling coil. This actuator variable is normally set to the keyword FLOW to control the mass flow rate.

Field: Control_Node

Name of the control node that the temperature is sensed.

Field: Actuator_Node

Name of the actuated node that controls the mass flow rate.

Field: Controller Convergence Tolerance

The coil is controlled by knowing the outlet temperature specified by the set point manager and setting the outlet conditions to meet this temperature. The hot and chilled water coils use complex models that cannot be inverted directly. Therefore, to determine the correct mass flow rate for the hot or cold water the models are inverted numerically using an iterative procedure. The iterative solution uses an interval halving routine and needs a termination criteria that is set with the Controller Convergence Tolerance parameter. The convergence tolerance is the maximum difference between the actual temperature at the set point node and the set point temperature. This control offset is set to a small temperature difference, such as 0.01 to denote 1/100 degree C. The defaulr is 0.1 degree C.

Field: Max Actuated Flow

This is the maximum water flow (m^3/sec) through the coil. Set to the maximum design water flow for the coil.

Field: Min Actuated Flow

Set to the minimum design water flow (m^3/sec) for the water coil, normally a shut off valve that is set to zero.

```
CONTROLLER:SIMPLE,
  A1 , \field Name
  A2 , \field Control variable
       \type choice
       \key TEMP
       \key HUMRAT
       \key FLOW
  A3 , \field Action
       \type choice
       \key NORMAL
       \key REVERSE
  A4 , \field Actuator variable
       \type choice
       \key FLOW
  A5 , \field Control_Node
  A6 , \field Actuator_Node
  N1 , \field Controller Convergence Tolerance: delta temp from setpoint temp
       \units C
       \type real
       \Minimum> 0.0
       \Default 0.1
  N3 , \field Max Actuated Flow
       \units m3/s
  N4 ; \field Min Actuated Flow
       \units m3/s
```

An example of this statement in an IDF is:

```
Controller:Simple,
      Main Cooling Coil Controller,  !Controller Name
      TEMP,                          !Control Variable
      Reverse,                       !Action
      FLOW,                          !Actuator variable
      NODE_3,                        !Control node
      NODE_21,                       !Actuator Node
      0.1,                           !Control Tolerance
      0.0011,                        !Max Actuated {Flow: m3/sec}
      0.0;                           !Min Actuated {Flow: ,3/sec}
```

Controller:Outside Air

A mixed air box has its own controller type called CONTROLLER:OUTSIDE AIR. The purpose of the outside air controller is to use outside air for free cooling whenever possible. The outside air controller includes a number of user selectable limit controls. If any of the selected limits are exceeded, the outside airflow rate is set to the minimum. If all the limits are satisfied, the outside air controller does the following: if the outside air temperature is greater than or equal to the mixed air temperature set point, the outside air flow rate is set to the maximum; if the outside air temperature is less than the mixed air temperature set point, the outside air controller will modulate the outside air flow so that the mixed air temperature will match the mixed air set point temperature.

Field: Name

The unique user assigned name for an instance of an outside air controller. Any other object referencing this outside air controller will use this name.

Field: EconomizerChoice

The options for this field are ECONOMIZER or NO ECONOMIZER. Choosing ECONOMIZER allows the economizer to operate; choosing NO ECONOMIZER means the economizer will not operate and the outside airflow rate will be at the minimum for the entire simulation.

Field: ReturnAirTempLimit

This input establishes whether or not there is a limit control on the return air temperature. The choices are RETURN AIR TEMP LIMIT or NO RETURN AIR TEMP LIMIT. If RETURN AIR TEMP LIMIT is chosen, whenever the outside air temperature is greater than the return air temperature the outside airflow rate is set to the minimum. If NO RETURN AIR TEMP LIMIT is chosen, no limit check on the return air temperature is performed.

Field: ReturnAirEnthalpyLimit

This input establishes whether or not there is a limit control on the return air enthalpy. The choices are RETURN AIR ENTHALPY LIMIT or NO RETURN AIR ENTHALPY LIMIT. If RETURN AIR ENTHALPY LIMIT is chosen, whenever the outside air enthalpy is greater than the return air enthalpy the outside airflow rate is set to the minimum. If NO RETURN AIR ENTHALPY LIMIT is chosen, no limit check on the return air enthalpy is performed.

Field: Lockout

Choices for this field are LOCKOUT or NO LOCKOUT. LOCKOUT means that the packaged DX unit compressors cannot run when the outside air dampers are open. NO LOCKOUT means that the packaged DX unit compressors can run even when the outside air dampers are open. **Note:** use of this input has not been implemented.

Field: MinimumLimit

Choices for this field are FIXED MINIMUM or PROPORTIONAL MINIMUM. FIXED MINIMUM means that the minimum outside airflow rate is fixed no matter what the actual system flow rate is. PROPORTIONAL MINIMUM means the minimum outside airflow rate varies in proportion to the total system air flow rate. **Note:** use of this input is not implemented. The program assumes a fixed minimum.

Field: Control_Node

Name of the node at which the mixed air set point is set. The outside air controller senses the temperature at this node and attempts to control that temperature to the node set point.

Field: Actuated_Node

The name of the node that is associated with the outside air damper. This should be the outside air node in the outside air mixer object associated with this outside air controller.

Field: minimum outside air flow rate

Input for this field is the minimum outside air volumetric flow rate for the system in cubic meters per second.

Field: maximum outside air flow rate

Input for this field is the maximum outside air volumetric flow rate for the system in cubic meters per second.

Field: temperature limit

Input for this field is the outside air temperature high limit (^{o}C) for economizer operation. If the outside air temperature is above this limit, the outside airflow rate will be set to the minimum. No input in this field means that there is no outside air temperature high limit control.

Field: temperature lower limit

Input for this field is the outside air temperature low limit (^{o}C) for economizer operation. If the outside air temperature is below this limit, the outside airflow rate will be set to the minimum. No input in this field means that there is no outside air temperature low limit control.

Field: enthalpy limit

Input for this field is the outside air enthalpy limit (in J/kg) for economizer operation. If the outside air enthalpy is above this value, the outside airflow rate will be set to the minimum. No input in this field means that there is no outside air enthalpy limit control.

Field: Relief_Air_Outlet_Node

The name of the relief air node of the outside air mixer associated with this outside air controller.

Field: Return_Air_Node

The name of the return air node of the outside air mixer associated with this outside air controller.

Field: Minimum Outside Air Schedule Name

The name of a schedule whose values are decimal fractions (0.0 – 1.0) that multiply the minimum outside air flow rate. This schedule is useful for reducing the outside air flow rate to zero during unoccupied or start up hours. If this field is not input, the minimum outside air flow rate remains constant during the simulation period.

```
CONTROLLER:OUTSIDE AIR,
  A1 , \field Name
  A2 , \field EconomizerChoice
       \type choice
       \key ECONOMIZER
       \key NO ECONOMIZER
  A3 , \field ReturnAirTempLimit
       \type choice
       \key RETURN AIR TEMP LIMIT
       \key NO RETURN AIR TEMP LIMIT
  A4 , \field ReturnAirEnthalpyLimit
       \type choice
       \key RETURN AIR ENTHALPY LIMIT
       \key NO RETURN AIR ENTHALPY LIMIT
  A5 , \field Lockout
       \type choice
       \key LOCKOUT
       \key NO LOCKOUT
  A6 , \field MinimumLimit
       \type choice
       \key FIXED MINIMUM
       \key PROPORTIONAL MINIMUM
```

```
  A7 , \field Control_Node
       \note mixed air node
  A8 , \field Actuated_Node
       \note outside air inlet node
  N1 , \field minimum outside air flow rate
       \units m3/s
  N2 , \field maximum outside air flow rate
       \units m3/s
  N3 , \field temperature limit
       \units C
  N4 , \field temperature lower limit
       \units C
  N5 , \field enthalpy limit
       \units J/kg
  A9 , \field Relief_Air_Outlet_Node
  A10, \field Return_Air_Node
  A11; \field Minimum Outside Air Schedule Name
       \type object-list
       \object-list ScheduleNames
       \note schedule values multiply the minimum outside air flow rate
```

An example of this statement in an IDF is:

```
CONTROLLER:OUTSIDE AIR,
      OA Controller 1,
      ECONOMIZER,
      NO RETURN AIR TEMP LIMIT,
      NO RETURN AIR ENTHALPY LIMIT,
      NO LOCKOUT,
      FIXED MINIMUM,
      NODE_52, NODE_51,
      0.4333, 1.3,
      19., 4.,
      ,
      NODE_50, NODE_1;
```

Controller:Zone Loop (Not Applicable)

The zone loop controller is used to manage components such as reheat coils. Its syntax is similar to the simple controller. This controller is left in the code until it can be determined if it will be removed. The current intent is to remove this zone controller and only use a single component ADU with the complex control built into the ADU.

Group – Evaporative Coolers

This group of objects describes the properties and configuration for the evaporative coolers models for the HVAC section.

EvapCooler:Direct:CelDekPad

The direct stage, shown in the figure below, consists of a rigid media evaporative pad, with water recirculated from a reservoir. The water is pumped from the reservoir to a water distribution header, for water feed by gravity from above the media. The evaporative pad provides the area for the adiabatic saturation of the air. While the process provides a lower dry bulb temperature, the moisture content of the leaving air is higher than the entering condition. The direct stage is used for comfort cooling in a building where adding humidity to the air can be tolerated.

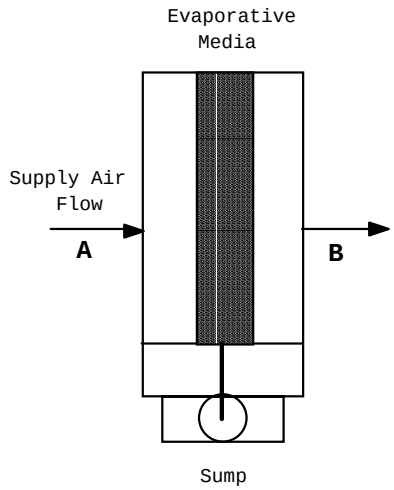

Figure 66. Direct Stage Evaporative Cooler

The thermodynamic process is a simultaneous heat and mass transfer, or adiabatic cooling, and follows a constant enthalpy line on the psychrometric chart, it is shown in the figure below as a process from A to B. Since the deviation of the constant wet-bulb line and the constant enthalpy line is small, it is assumed that the wet bulb temperature is constant across the direct evaporative stage.

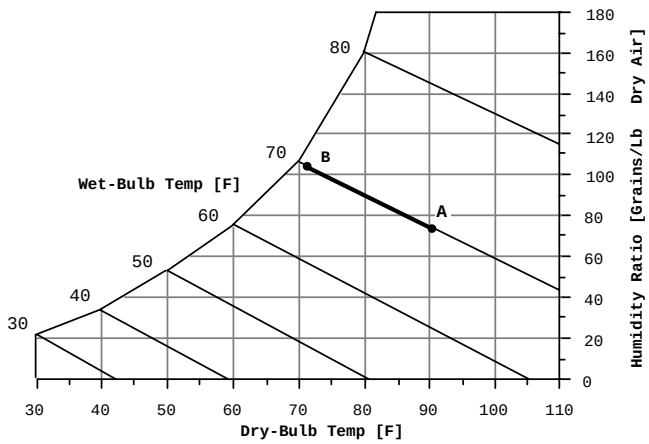

Figure 67. Psychrometric Chart -- Constant Enthalpy

If the direct evaporative process were 100% efficient, the leaving dry bulb temperature would equal the entering wet bulb temperature. The efficiency of the direct evaporative process is less than 100% and by defining saturation efficiency ($\square_{se}$) for the direct stage or evaporative pad, the leaving dry bulb temperature can be expressed by the following equation.

$$T_{db\ sup\ out} = T_{db\ sup\ in} - \square_{se} * (T_{odb} - T_{owb})$$

Field: Evap Cooler Name

A unique identifying name for each evaporative cooler.

Field: Available Schedule

Schedule which defines when the evaporative cooler is available.

Field: Direct Pad Area

The area of the Celdek pad in m^2. With the Area and mass flow rate the air velocity is calculated and is used to determine the Saturation Efficiency.

Field: Direct Pad Depth

The depth of the Celdek pad in meters. The pad depth is used to determine the Saturation Efficiency.

Field: Recirc Water Pump Power Consumption

This field is used to specify the power consumed by the Evaporative Cooler recirculating pump in Watts [W].

Field: Evap_Air_Inlet_Node

The name of the evaporative cooler air inlet from the Air Loop Simulation.

Field: Evap_Air_Outlet_Node

The name of the evaporative cooler air outlet from the Air Loop Simulation.

Field: Control Type

Currently the only control type implemented is Constant. Other control types are being developed.

```
EvapCooler:Direct:CelDekPad,
  A1 , \field EvapCooler Name
       \type alpha
  A2 , \field Available Schedule
       \type object-list
       \object-list ScheduleNames
  N1 , \field Direct Pad Area
       \units m2
       \minimum 0.0
  N2 , \field Direct Pad Depth
       \units m
       \minimum 0.0
  N3 , \field Recirc Water Pump Power Consumption
       \units W
  A3 , \field Evap_Air_Inlet_Node
  A4 , \field Evap_Air_Outlet_Node
  A5 ; \field Control Type
```

And, an IDF example showing how it is:

```
EvapCooler:Direct:CelDekPad,
      DirectEvapCooler1 ,   !EvapCooler Name
      FanAndCoilAvailSched, !Evap Schedule
      0.6 ,                 !Pad Area in m^2
      0.2 ,                 !Pad Depth in m
      225.,                 !Pump Power in W
      EvapCoolerDirectInletAirNode,
      Air Loop Outlet Node,
      Constant ;
```

EvapCooler:Direct:CelDekPad Outputs

The output variables that are available for the Direct Evaporative Cooler are shown:

```
HVAC,Average, Direct Evap Saturation Efficiency
HVAC,Average, Evap Cooler Electric Power[W]
HVAC,Sum, Evap Cooler Electric Energy[J]
HVAC,Sum, Evap Cooler Water Consumption[m3]
```

EvapCooler:InDirect:CelDekPad

The dry coil indirect evaporative cooler, shown in the figure below, has a rigid media pad, similar to the direct evaporative stage, where the adiabatic cooling takes place. The secondary air leaves the rigid media pad and enters an air to air heat exchanger where it cools the supply air flowing through the heat exchanger tubes. The moist secondary air is then exhausted to the environment. The secondary air stream has its own fan.consists of a rigid media evaporative pad, with water recirculated from a reservoir. The water is pumped from the reservoir to a water distribution header, for water feed by gravity from above the media. The evaporative pad provides the area for the adiabatic saturation of the air. While the process provides a lower dry bulb temperature, the moisture content of the leaving air is higher than the entering condition. The direct stage is used for comfort cooling in a building where adding humidity to the air can be tolerated.

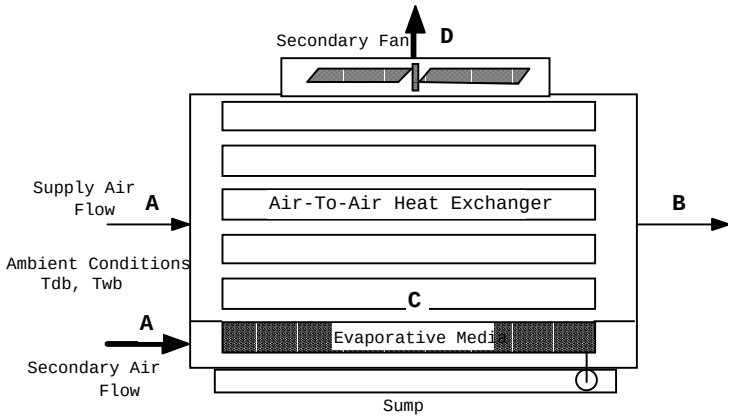

Figure 68. Evaporative Cooler -- Indirect Dry Coil

The process that the secondary air goes through, A to C to D, is shown by the dashed lines in the following figure. Process A to C is adiabatic cooling in the rigid media pad. Then the air enters the shell side of the heat exchanger and is sensibly heated from C to D by the warm supply air passing through the tube side.

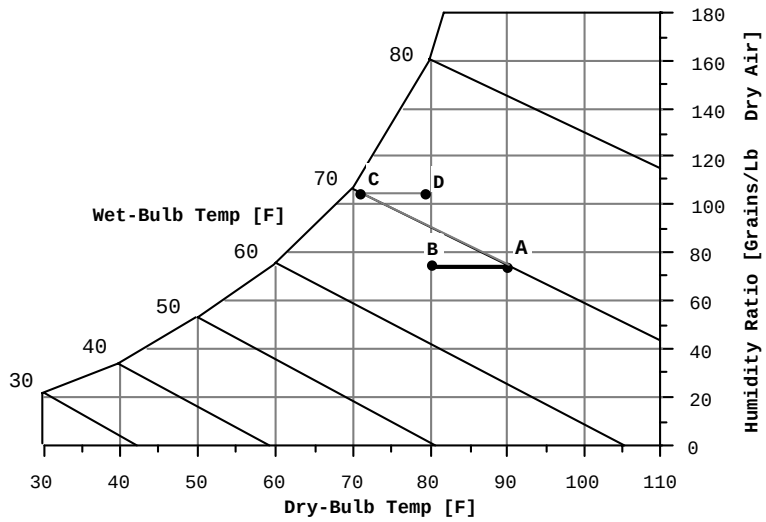

Figure 69. Secondary Air Process -- Indirect Dry Coil Evap Cooler

The advantage of the dry coil heat exchanger is that the heat exchanger does not have the evaporation taking place on the outside of the tubes, thus no mineral deposits are left on the heat exchange surface to reduce the efficiency of the heat exchanger. The rigid media pads are designed to flush the mineral deposits to the sump, so the saturation efficiency of the pad stays relatively constant.

Field: Evap Cooler Name

A unique identifying name for each evaporative cooler.

Field: Available Schedule

Schedule which defines when the evaporative cooler is available.

Field: Direct Pad Area

The area of the Celdek pad in m^2. With the Area and mass flow rate the air velocity is calculated and is used to determine the Saturation Efficiency on the Secondary side of the evpaorative cooler.

Field: Direct Pad Depth

The depth of the Celdek pad in meters. The pad depth is used to determine the Saturation Efficiency on the Secondary side of the evpaorative cooler.

Field: Recirc Water Pump Power Consumption

This field is used to specify the power consumed by the Evaporative Cooler recirculating pump in Watts [W].

Field: Secondary Fan Flow Rate

This field is used to specify the secondary fan flow rate and is specified in [m^3/sec].

Field: Secondary Fan Efficiency

This field is used to specify the efficiency of the fan and is used to calculate the power consumed by the Evaporative Cooler secondary fan.

Field: Secondary Fan Delta Pressure

This field is used to specify the delta pressure across the secondary stage of the evaporative cooler in [Pascals].

Field: Indirect Heat Exchanger Effectiveness

This field is used to specify the effectiveness of the indirect heat exchanger between the primary and secondary air flow.

Field: Evap_Air_Inlet_Node

The name of the evaporative cooler air inlet from the Air Loop Simulation.

Field: Evap_Air_Outlet_Node

The name of the evaporative cooler air outlet from the Air Loop Simulation.

Field: Control Type

Currently the only control type implemented is Constant. Other control types are being developed.

```
EvapCooler:InDirect:CelDekPad,
  A1 , \field EvapCooler Name
       \type alpha
  A2 , \field Available Schedule
       \type object-list
       \object-list ScheduleNames
  N1 , \field Direct Pad Area
       \units m2
       \minimum 0.0
  N2 , \field Direct Pad Depth
       \units m
       \minimum 0.0
  N3 , \field Recirc Water Pump Power Consumption
       \units W
  N4 , \field Secondary Fan Flow Rate
       \units m3/s
       \minimum 0.0
  N5 , \field Secondary Fan Efficiency
       \type real
       \minimum 0.0
       \maximum 1.0
  N6 , \field Secondary Fan Delta Pressure
       \units Pa
       \minimum 0.0
  N7 , \field Indirect Heat Exchanger Effectiveness
       \type real
       \minimum 0.0
  A3 , \field Evap_Air_Inlet_Node
  A4 , \field Evap_Air_Outlet_Node
  A5 ; \Field Control Type
```

And, an IDF example showing how it is specified:

```
EvapCooler:InDirect:CelDekPad,
      IndirectEvapCooler1 ,         !EvapCooler Name
      FanAndCoilAvailSched, !Evap Schedule
      0.6 ,                 !Pad Area in m^2
      0.2 ,                 !Pad Depth in m
      225.,                 !Pump Power in W
      1.0 ,                 !Indirect Pad Fan Flow Rate in m^3/s
      0.7 ,                 !Indirect Fan Efficiency
      200.0,                !Indirect Fan Delta Pressure in Pa
      0.67,                 !Indirect Heat Exchanger Effectiveness
      EvapCoolerIndirectInletAirNode,
      EvapCoolerDirectInletAirNode,
      Constant ;
```

EvapCooler:InDirect:CelDekPad Outputs

The output variables that are available for the Dry InDirect Evaporative Cooler are shown:

```
HVAC,Average, Indirect Dry Evap Saturation Efficiency
HVAC,Average, Indirect Dry Evap Total Stage Efficiency
HVAC,Average, Evap Cooler Electric Power[W]
HVAC,Sum, Evap Cooler Electric Energy[J]
HVAC,Sum, Evap Cooler Water Consumption[m3]
```

EvapCooler:InDirect:WetCoil

The wetted coil evaporative cooler shown in the figure below, has water sprayed directly on the tubes of the heat exchanger where latent cooling takes place. The vaporization of the water on the outside of the heat exchanger tubes allows the simultaneous heat and mass transfer which removes heat from the supply air on the tube side. Then the moist secondary air is exhausted. The secondary air stream has its own fan.

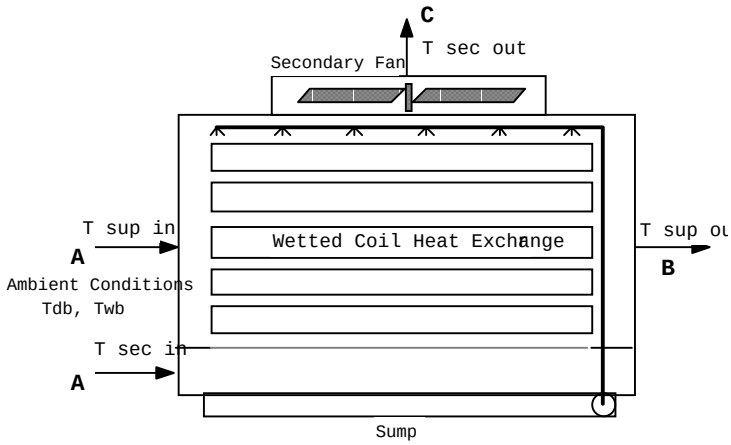

Figure 70. Evaporative Cooler -- Wet Coil

The process that the secondary air goes through, A to C on the following figure, is a path of simultaneous heat and mass transfer, but it does not follow a line of constant enthalpy as in the direct stage. The process is not adiabatic due to the heat gain from the supply air flowing through the tubes of the heat exchanger.

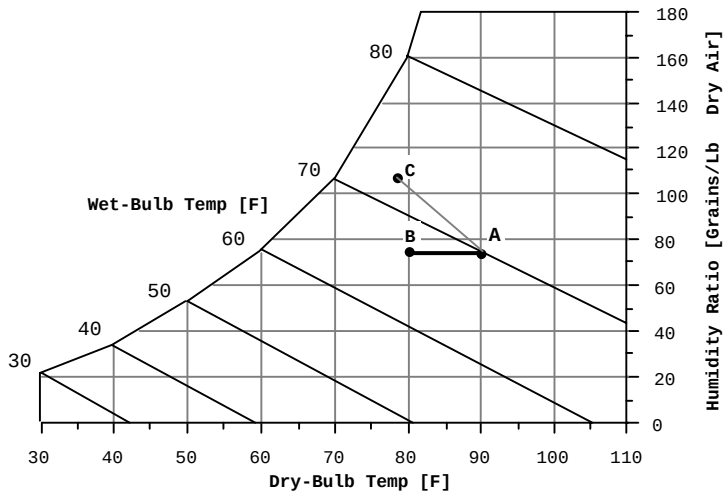

Figure 71. Secondary Air Process – Indirect Wet Coil Evap Cooler

The wet coil heat exchanger can have a higher stage efficiency than the dry coil due to a higher heat transfer rate on the outside of the heat exchanger tubes. Over the operating lifetime of the heat exchanger, the vaporization taking place on the heat exchange surface can leave mineral deposits which will decrease the effectiveness of the heat exchanger.

Field: Evap Cooler Name

A unique identifying name for each evaporative cooler.

Field: Available Schedule

Schedule which defines when the evaporative cooler is available.

Field: Coil Maximum Efficiency

The maximum efficiency of the stage is a combination of the efficiency due to the simultaneous heat and mass transfer on the outside of the tube and the efficiency of the heat exchanger. This value can be higher than the dry coil overall efficiency since the convective coefficients on the outside of the tube are larger.

Field: Coil Flow Ratio

The Coil Flow Ratio is determined from performance data. The Coil Flow Ratio tells how quickly the efficiency of the stage would decrease with a mismatch of the supply and secondary flows.

Field: Recirc Water Pump Power Consumption

This field is used to specify the power consumed by the Evaporative Cooler recirculating pump in Watts [W].

Field: Secondary Fan Flow Rate

This field is used to specify the secondary fan flow rate and is specified in [m^3/sec].

Field: Secondary Fan Efficiency

This field is used to specify the efficiency of the fan and is used to calculate the power consumed by the Evaporative Cooler secondary fan.

Field: Secondary Fan Delta Pressure

This field is used to specify the delta pressure across the secondary stage of the evaporative cooler in [Pascals].

Field: Evap_Air_Inlet_Node

The name of the evaporative cooler air inlet from the Air Loop Simulation.

Field: Evap_Air_Outlet_Node

The name of the evaporative cooler air outlet from the Air Loop Simulation.

Field: Control Type

Currently the only control type implemented is Constant. Other control types are being developed.

```
EvapCooler:InDirect:WetCoil,
  A1 , \field EvapCooler Name
       \type alpha
  A2 , \field Available Schedule
       \type object-list
       \object-list ScheduleNames
  N1 , \field Coil Maximum Efficiency
       \type real
       \minimum 0.0
       \maximum 1.0
  N2 , \field Coil Flow Ratio
       \type real
  N3 , \field Recirc Water Pump Power Consumption
       \units W
  N4 , \field Secondary Fan Flow Rate
       \units m3/s
       \minimum 0.0
  N5 , \field Secondary Fan Efficiency
       \type real
       \minimum 0.0
       \maximum 1.0
  N6 , \field Secondary Fan Delta Pressure
       \units Pa
       \minimum 0.0
  A3 , \field Evap_Air_Inlet_Node
  A4 , \field Evap_Air_Outlet_Node
  A5 ; \Field Control Type
```

And, an IDF example showing how it is specified:

```
EvapCooler:InDirect:WetCoil,
      WetIndEvapCooler1 ,   !EvapCooler Name
      FanAndCoilAvailSched, !Evap Schedule
      0.8 ,                 !Coil Maximum Efficiency
      0.16,                 !Coil Flow Ratio
      225.,                 !Pump Power in W
      1.0 ,                 !Indirect Pad Fan Flow Rate in m^3/s
      0.7 ,                 !Indirect Fan Efficiency
      200.0,                !Indirect Fan Delta Pressure in Pa
      EvapCoolerInletAirNode,
      Air Loop Outlet Node,
      Constant ;
```

EvapCooler:InDirect:WetCoil Outputs

The output variables that are available for the Wet InDirect Evaporative Cooler are shown:

```
HVAC,Average, Indirect Wet Evap Total Stage Efficiency
HVAC,Average, Evap Cooler Electric Power[W]
HVAC,Sum, Evap Cooler Electric Energy[J]
HVAC,Sum, Evap Cooler Water Consumption[m3]
```

Group – Heat Recovery

Heat Exchanger:Air to Air:Flat Plate

The air-to-air flate plate heat exchanger is an HVAC component typically used for exhaust or relief air heat recovery. The user can choose the flow arrangement: counter flow, parallel flow, or cross flow with both streams unmixed. The input requires no geometric data. Performance is defined by specifying primary outlet air temperature at nominal (user specified) inlet conditions. In addition, the ratio $(h \cdot A)_p$ / $(h \cdot A)_s$ at nominal flow needs to be input, where h is the convective heat transfer coefficient, A is the surface area, p stands for primary side, s for secondary side.

If the heat exchanger is operated in conjunction with an outside air economizer (economizer lockout set to *yes*), the nominal supply air flow rate should be set equal to the minimum outside air flow rate specified in the Controller:Outside Air. The heat exchanger detects that the economizer is operating by the fact that its inlet air flow rate is greater than its nominal supply air flow rate.

Field: Name

A unique user assigned name for a particular air-to-air flat plate heat exchanger unit. Any reference to this unit by another object will use this name.

Field: Available Schedule

The name of the schedule (ref: Schedule) that denotes whether the unit can run during a given hour. A schedule value greater than 0 (usually 1 is used) indicates that the unit can be on during the hour. A value less than or equal to 0 (usually 0 is used) denotes that the unit must be off for the hour

Field: flow arrangement

The user specified flow arrangement of the heat exchanger. The possible inputs are *Counter Flow*, *Parallel Flow*, or *Cross Flow Both Unmixed*.

Field: Economizer lockout

This input denotes whether the heat exchanger unit is locked out (bypassed) when the air side economizer is operating. The input choices are *yes* (meaning locked out) or *no*.

Field: hA ratio

The ratio $(h \cdot A)_p$ / $(h \cdot A)_s$ at nominal flow. h is the surface convective heat transfer coefficient, A is the heat transfer area, and p and s stand for primary side and secondary side respectively. A typical value for this ratio is 1.0.

Field: Nominal supply air flow rate

The nominal primary side air flow rate in cubic meters per second. If the unit is operated in conjunction with an outside air economizer this should be equal to the minimum outside air flow rate.

Field: Nominal supply air inlet temperature

The nominal primary side air inlet temperature in Celsius.

Field: Nominal supply air outlet temperature

The nominal primary side air outlet temperature in Celsius.

Field: Nominal secondary air flow rate

The nominal secondary side air flow rate in cubic meters per second.

Field: Nominal secondary air inlet temperature

The nominal secondary side air inlet temperature in Celsius.

Field: Nominal electric power

The electric power consumption of the unit in watts at nominal conditions.

Field: Supply air inlet node

The name of the HVAC system node from which the unit draws its primary inlet air.

Field: Supply air outlet node

The name of the HVAC system node to which the unit sends its primary outlet air.

Field: Secondary air inlet node

The name of the HVAC system node from which the unit draws its secondary inlet air.

Field: Secondary air outlet node

The name of the HVAC system node to which the unit sends its secondary outlet air.

The full IDD specification follows:

```
HEAT EXCHANGER:AIR TO AIR:FLAT PLATE,
  A1, \field Name
      \type alpha
  A2, \field Available Schedule
      \type object-list
      \object-list ScheduleNames
  A3, \field flow arrangement
      \type choice
      \key Counter Flow
      \key Parallel Flow
      \key Cross Flow Both Unmixed
  A4, \field Economizer lockout
      \type choice
      \key yes
      \key no
      \note Yes means that the heat exchanger will be locked out (off)
      \note when the economizer is operating
  N1, \field hA ratio
      \type real
      \note ratio of h*A for supply side to h*A for exhaust side
      \minimum 0.0
  N2, \field Nominal supply air flow rate
      \type real
      \minimum 0.0
      \units m3/s
```

An IDF example:

```
HEAT EXCHANGER:AIR TO AIR:FLAT PLATE,
      OA Heat Recovery 1,
      FanAndCoilAvailSched,
      Counter Flow, ! flow arrangement
      Yes,          ! econo lockout
      1.0,          ! hA ratio
      0.4333,       ! primary air volume flow rate
      5.0,          ! primary air inlet temperature
      15.0,         ! primary air outlet temperature
      0.4333,       ! secondary air volume flow rate
      20.0,         ! secondary air inlet temperature
      0.0,          ! nominal power consumption
      Outside Air Inlet Node,               ! primary inlet node
      Heat Recovery Outlet Node,            ! primary outlet node
      Relief Air Outlet Node,               ! secondary inlet node
      Heat Recovery Secondary Outlet Node;  ! secondary outlet node
```

Heat Exchanger:Air to Air:Flat Plate Outputs

```
HVAC,Average,Sensible Heat Recovery Rate[W]
HVAC,Sum,Sensible Heat Recovery[J]
HVAC,Average,Total Heat Recovery Rate[W]
HVAC,Sum,Total Heat Recovery[J]
HVAC,Average,Heat Recovery Elec Use Rate[W]
HVAC,Sum,Heat Recovery Elec Use Energy[J]
```

Group – Electric Load Center-Generator Specifications

Electric Load Center:Distribution

The electric load center distribution manager operates generators specified in the simulation.

Field: Load Center Name

This alpha field contains the identifying name for the electric load center distribution scheme..

Field: Generator List Name

This alpha field contains the identifying name for the list of generators in the set.

Field: Generator Operation Scheme Type

This alpha field specifies the type of operating scheme for the generator set. Currently, the only available operating scheme is BASELOAD. This scheme operates the generators at their rated capacity when the the generator is scheduled ON. When implemented, the second scheme, DEMANDLOAD, will use energy meters to control generator operation

Field: Load Center Electric Demand Meter Name

This alpha field specifies the name of the electric demand meter for generator control. This option has not been implemented.

Field: Load Center Electric Generation Meter Name

This alpha field specifies the name of the electric generation meter for generator control. This option has not been implemented.

```
ELECTRIC LOAD CENTER:DISTRIBUTION,
  A1 , \field Load Center Name
  A2 , \field Generator List Name
  A3,  \field Generator Operation Scheme Type
       \type choice
       \key BASELOAD
       \key DEMANDLOAD
  A4,  \field Load Center Electric Demand Meter Name
  A5;  \field Load Center Electric Generation Meter Name
```

An example from the IDF:

```
ELECTRIC LOAD CENTER:DISTRIBUTION,
  Generator Load Center,
  Backup Generators,
  BASELOAD,
  PlantMeter,
  GeneratorPowerMeter;
```

Electric Load Center:Generators

The electric load center generators provides a set of scheduled electric generators for electric power generation.

Field: Generator List Name

This alpha field contains the identifying name for the generators in the set.

FieldSet: Name, Type, Rated Output, Availability up to 5

Each generator is specified by an identifying name, a keyword that indicates the type of generator, the rated output of the generator and the availability schedule of the generator.

Field: Generator #1 Name

This alpha field contains the identifying name for the first generator in the list.

Field: Generator #1 Type

This alpha field contains the keyword for the type of generator, either DIESEL, or GASTURBINE.

Field: Generator #1 Rated Electric Power Output

This numeric field contains the rated electric output of the generator in Watts.

Field: Generator #1 Availability Schedule

This alpha field is used as an identifying field for the generator availability Schedule. This field ties to the ScheduleType input structure, which must also be defined.

```
ELECTRIC LOAD CENTER:GENERATORS,
  A1 , \field Generator List Name
  A2 , \field Generator #1 Name
  A3 , \field Generator #1 Type
       \type choice
       \key GENERATOR:DIESEL
       \key GENERATOR:GASTURBINE
  N1 , \field Generator #1 Rated Electric Power Output
  A4 , \field Generator #1 Availability Schedule
       \type object-list
       \object-list ScheduleNames
-- reduced for brevity --
```

An example from the IDF:

```
ELECTRIC LOAD CENTER:GENERATORS,
   Backup Generators,
   Cat Diesel,
   GENERATOR:DIESEL,
   50000,
   On Peak,
   Solar Turbine,
   GENERATOR:GAS TURBINE,
   30000,
   Off Peak;
```

Generator: Diesel

The Diesel engine generator uses a modified Otto cycle. The diesel generator model uses the electrical load and engine generator size to compute part-load ratios (PLR). Fuel energy input and recoverable jacket and lube oil heat are then computed. Finally, the recoverable exhaust heat is calculated.

Manufacturer's curves or tables must be obtained for diesel engine generators to derive the equipment performance parameters that are specified in the quadratic curve fits. Note that simple transformation of the form of the manufacturer's curves may be required. Electric energy output/fuel energy input is related to the Part Load Ratio part-load ratio (i.e., electric/load generator capacity) with a polynomial. Recoverable jacket heat/fuel energy equipment, recoverable lube oil heat/fuel energy input equipment performance, total exhaust heat/fuel energy input equipment, exhaust gas temperature/fuel energy input equipment performance parameters are all specified with a quadratic curve fit.

When the heat recovery curve fits = 0.0, this means that no heat recovery is done on the diesel generator exhaust gas; and no heat recovery is specified.

Field: Generator Name

This alpha field contains the identifying name for the diesel generator.

Field: Rated Power Output

The design nominal capacity of the Diesel Generator in Watts [W].

Field: Electric Circuit Node

This Named node contains where the electric power is put in the program simulation for use by the electric equipment in the Load Center.

Field: Minimum Part Load Ratio

This field contains the minimum allowed operating fraction of full load.

Field: Maximum Part Load Ratio

This field contains the maximum allowed operating fraction of full load.

Field: Opt Part Load Ratio

This alpha field contains the optimal operating fraction of full load. This is the part load ratio that gives the optimal production of electric power with the least amount of fuel usage.

Field: the Shaft Power curve

This alpha field contains the name of the shaft power curve. The curve itself is specified separately using a curve object (see Curve:Quadratic). The Shaft Power Curve is a quadratic equation that determines the electric output versus the fuel used. Used to calculate the electric energy output divided by the fuel energy consumption as a function of part-load ratio. The defining equation is:

$$ShaftPowerToFuelRatio = C_1 + C_2 RL + C_3 RL^2$$

where RL is the Ratio of Load to Rated Power Output.

Field: the Recovery Jacket Heat curve

This alpha field contains the name of the Recovery Jacket Heat curve. The curve itself is specified separately using a curve object (see Curve:Quadratic). The Recovery Jacket Heat Curve is a quadratic equation that determines the ratio of recovery jacket heat to fuel energy. Used to calculate the recoverable jacket heat as a function of part-load ratio.

The defining equation is:

$$RecoveryJacketHeatToFuelRatio = C_1 + C_2 RL + C_3 RL^2$$

where RL is the Ratio of Load to Rated Power Output.

Field: the Recovery Lube Heat curve

This alpha field contains the name of the Recovery Lube Heat curve. The curve itself is specified separately using a curve object (see Curve:Quadratic). The Recovery Lubricant Heat Curve is a quadratic equation that determines the ratio of recovery lube heat to fuel energy. Used to calculate the recoverable lube oil heat as a function of part-load ratio. The defining equation is:

$$RecoveryLubeHeatToFuelRatio = C_1 + C_2 RL + C_3 RL^2$$

where RL is the Ratio of Load to Rated Power Output.

Field: the Total Exhaust Energy curve

This alpha field contains the name of the Total Exhaust Energy curve. The curve itself is specified separately using a curve object (see Curve:Quadratic). The Total Exhaust Energy Curve is a quadratic equation that determines the ratio of total exhaust energy to fuel energy. Used to calculate the total exhaust heat as a function of part-load ratio. The defining equation is:

$$TotalExhaustToFuelRatio = C_1 + C_2 RL + C_3 RL^2$$

where RL is the Ratio of Load to Rated Power Output.

Field: the Exhaust Temperature curve

This alpha field contains the name of the Exhaust Temperature curve. The curve itself is specified separately using a curve object (see Curve:Quadratic). The Exhaust Temperature Curve is a quadratic equation that determines the absolute exhaust temperature. Used to determine the exhaust gas temperature as a function of part-load ratio. The defining equation is:

$$AbsoluteExhaustTemperature = C_1 + C_2 RL + C_3 RL^2$$

where RL is the Ratio of Load to Rated Power Output.

UA Curve

The UA curve applies to the exhaust gas heat exchanger. The curve is an equation that determines the overall heat transfer coefficient for the exhaust gasses with the stack. The heat transfer coefficient ultimately helps determine the exhaust stack temperature. The defining equation is:

$$UAToCapacityRatio = C_1 GeneratorRatedPowerOutput^{C_2}$$

The following two fields contain the coefficients for the equation.

Field: Coefficient1 of UA curve

This numeric field contains the first coefficient for the overall heat transfer coefficient curve.

Field: Coefficient2 of UA curve

This numeric field contains the second (exponential) coefficient for the overall heat transfer coefficient curve.

Field: Maximum Exhaust Flow per KW of Generator Output

Maximum exhaust flow per unit capacity for diesel engines. The parameter sets an upper limit on exhaust gas flow and exhaust gas heat recovery for diesel engines. Units: kg/sec per kW capacity

Field: Design Minimum Exhaust temp. (Steam Saturation Temperature)

This is the design engine stack saturated steam temperature in degrees C.

Field: Fuel Heating Value

Heating Value of Fuel in KJ/kg

Field: Design heat recovery water volumetric flow rate

Design Water volumetric flow rate through heat recovery loop in m^3/sec.

Field: Heat_Recovery_Side_Inlet_Node

This alpha field contains the identifying name for the diesel generator heat recovery side inlet node.

Field: Heat_Recovery_Side_Outlet_Node

This alpha field contains the identifying name for the diesel generator heat recovery side outlet node.

```
GENERATOR:DIESEL,
       \memo This generator model is the empirical model from the Building Loads
       \memo and System Thermodynamics (BLAST) program.  Engine performance
       \memo curves are generated by fitting catalog data to second order
       \memo polynomial equations.  Three sets of coefficients are required.
  A1, \field Generator Name
  N1, \field Rated Power Output
       \units W
  A2, \field Electric Circuit Node
  N2, \field Minimum Part Load Ratio
  N3, \field Maximum Part Load Ratio
  N4, \field Opt Part Load Ratio
  A3, \field the Shaft Power curve
       \type object-list
       \object-list QuadraticCurves
       \note curve = a + b*PLR + c*PLR**2
       \note PLR = Ratio of Generator Load to Rated Power Output
  A4, \field the Recovery Jacket Heat curve
       \type object-list
       \object-list QuadraticCurves
       \note curve = a + b*PLR + c*PLR**2
       \note PLR = Ratio of Generator Load to Rated Power Output
  A5, \field the Recovery Lube Heat curve
       \type object-list
       \object-list QuadraticCurves
       \note curve = a + b*PLR + c*PLR**2
       \note PLR = Ratio of Generator Load to Rated Power Output
  A6, \field the Total Exhaust Energy curve
       \type object-list
       \object-list QuadraticCurves
       \note curve = a + b*PLR + c*PLR**2
       \note PLR = Ratio of Generator Load to Rated Power Output
  A7, \field the Exhaust Temperature curve
       \type object-list
       \object-list QuadraticCurves
       \note curve = a + b*PLR + c*PLR**2
       \note PLR = Ratio of Generator Load to Rated Power Output
  N5, \field Coefficient1 of UA curve
       \note curve = C1 * Generator Rated Power Output**C2
  N6, \field Coefficient2 of UA curve
       \note curve = C1 * Generator Rated Power Output**C2
  N7, \field Maximum Exhaust Flow per KW of Generator Output
       \units
  N8, \field Design Minimum Exhaust temp. (Steam Saturation Temperature)
       \units C
  N9, \field Fuel Heating Value
       \units
  N10, \field Design heat recovery water flow rate
       \units m3/s
  A8, \field Heat_Recovery_Side_Inlet_Node
  A9; \field Heat_Recovery_Side_Outlet_Node
```

And, an IDF example showing how it is used:

```
GENERATOR:DIESEL, Cat Diesel,
        50000,                            !Rated Power Output
        Generator Diesel Electric Node,   !Electric Circuit Node
        .15,                              !Min Part Load Ratio
        1.0,                              !Max Part Load Ratio
        .65,                              !Opt Part Load Ratio
        BG Shaft Power Curve,
        BG Recovery Jacket Heat Curve,
        BG Recovery Lube Heat Curve,
        BG Total Exhaust Energy Curve,
        BG Exhaust Temperature Curve,
        0.00952329, 0.9,        !UA to Capacity Ratio Coeffs        !Diesel Engine Capacity
        1.4644,                 !Maximum Exhaust Flow per KW Diesel Power Out
        150,                    !Design Min. exhaust temp.(Steam Saturation Temperature) (C)
        10700,                  !Fuel Heating Value (W-hours/L)
        0.00001,                 !Design heat recovery water flow rate (m3/s)
        Cat Diesel Heat Rec Inlet Node, Cat Diesel Heat Rec Outlet Node;
```

```
    CURVE:QUADRATIC, BG Shaft Power Curve,
        0.09755, 0.6318, -0.4165;
    CURVE:QUADRATIC, BG Recovery Jacket Heat Curve,
         0.25,0,0;
    CURVE:QUADRATIC, BG Recovery Lube Heat Curve,
        0.15,0,0;
    CURVE:QUADRATIC, BG Total Exhaust Energy Curve,
        0.1,0,0;
    CURVE:QUADRATIC, BG Exhaust Temperature Curve,
        425,0,0;
```

Generator:Diesel Outputs

The output variables that are available for the Diesel Generator are:

```
HVAC,Average,Generator Electric Power Produced [W]
HVAC,Sum,Generator Electric Energy Produced [J]
Zone,Meter,ElectricityProduced:Plant [J]
Zone,Meter,ElectricityProduced:Facility [J]
Zone,Meter,Cogeneration:ElectricityProduced [J]

HVAC,Average,Generator Lube Heat Recovery Rate [W]
HVAC,Sum,Generator Lube Heat Recovery [J]

HVAC,Average,Generator Jacket Heat Recovery Rate [W]
HVAC,Sum,Generator Jacket Heat Recovery [J]

HVAC,Average,Generator Exhaust Heat Recovery Rate [W]
HVAC,Sum,Generator Exhaust Heat Recovery [J]

HVAC,Average,Generator Total Heat Recovery Rate [W]
HVAC,Sum,Generator Total Heat Recovery [J]

HVAC,Average,Generator Exhaust Stack Temp [C]

HVAC,Average,Generator Heat Recovery Inlet Temp [C]
HVAC,Average,Generator Heat Recovery Outlet Temp [C]
HVAC,Average,Generator Heat Recovery Mass Flow Rate [kg/s]

HVAC,Average,Generator Diesel Consumption Rate [W]
HVAC,Sum,Generator Diesel Consumption [J]
Zone,Meter,Cogeneration:Diesel [J]
HVAC,Average,Generator Diesel Mass Flow Rate [kg/s]
```

Generator Electric Power Produced [W]

Generator Electric Energy Produced [J]

These outputs are the electric power output from the electric generator. Energy is metered on Cogeneration:ElectricityProduced, ElectricityProduced:Plant, and ElectricityProduced:Facility.

Generator Lube Heat Recovery Rate [W]

Generator Lube Heat Recovery [J]

Generator Jacket Heat Recovery Rate [W]

Generator Jacket Heat Recovery [J]

Generator Exhaust Heat Recovery Rate [W]

Generator Exhaust Heat Recovery [J]

Generator Total Heat Recovery Rate [W]

Generator Total Heat Recovery [J]

For electric generators with heat recovery these outputs are the components of recoverable energy available. For the diesel generator, the following heat recovery components are reported: Lube (engine lubricant), Jacket (engine coolant), Exhaust (engine exhaust), and Total. Generator Lube Heat Recovery, Generator Jacket Heat Recovery, and Generator Exhaust Heat Recovery are metered on HeatRecovery:EnergyTransfer, EnergyTransfer:Plant, and EnergyTransfer:Facility.

Generator Exhaust Stack Temp [C]

This is the exhaust temperature leaving the engine

Generator Heat Recovery Inlet Temp [C]

Generator Heat Recovery Outlet Temp [C]

Generator Heat Recovery Mass Flow Rate [kg/s]

These outputs are the heat recovery inlet and outlet temperatures and flow rate for generators with heat recovery.

Generator Diesel Consumption Rate [W]

Generator Diesel Consumption [J]

Generator Diesel Mass Flow Rate [kg/s]

These outputs are the diesel fuel input to the electric generator. Consumption is metered on Cogeneration:Diesel, Diesel:Plant, and Diesel:Facility.

Generator:Gas Turbine

The basic gas-turbine cycle is the Brayton Cycle or open cycle, which consists of an adiabatic compression, constant pressure heating, and adiabatic expansion. The gas turbine model

uses the electrical load and engine generator size to compute part-load ratios (PLR). Fuel energy input and recoverable lube oil heat are then computed. Finally, the recoverable exhaust heat is calculated.

Gas turbine generators use performance parameters to compute fuel energy consumption as a function of part-load and ambient (entering) air temperature. Recoverable fuel energy equipment, recoverable lube oil heat/fuel energy input equipment performance, total exhaust heat/fuel energy input equipment, exhaust gas temperature/fuel energy input equipment performance parameters are all specified with a quadratic curve fit.

When the heat recovery curve fits = 0.0, this means that no heat recovery is done on the diesel generator exhaust gas; and no heat recovery is specified.

Field: Generator Name

Unique name to identify this Gas Turbine generator.

Field: Rated Power Output

The design nominal capacity of the Gas Turbine Generator in Watts [W].

Field: Electric Circuit Node

This Named node contains where the electric power is put in the program simulation for use by the electric equipment in the Load Center.

Field: Minimum Part Load Ratio

This field contains the minimum allowed operating fraction of full load.

Field: Maximum Part Load Ratio

This field contains the maximum allowed operating fraction of full load.

Field: Opt Part Load Ratio

This alpha field contains the optimal operating fraction of full load. This is the part load ratio that gives the optimal production of electric power with the least amount of fuel usage.

Field: Part Load Based Fuel Input curve

Needs the Quadratic Curve Object to be specified.

Fuel Input = a + b*PLR + c*PLR**2

PLR = Ratio of Generator Load to Rated Power Output. This curve is multiplied to the Temperature Based Fuel Input Curve to determine Fuel Energy In

Field: Temperature Based Fuel Input curve

Needs the Quadratic Curve Object to be specified.

Fuel Input = a + b*AT + c*AT**2 where: AT = Ambient Delta T

PLR = Ratio of Generator Load to Rated Power Output this curve is multiplied to the Temperature Based Fuel Input Curve to determine Fuel Energy In.

Field: Exhaust Flow curve

The Total Exhaust Energy Curve is a quadratic equation that needs to be specified by a curve fit object. Used to calculate the total exhaust heat as a function of part-load ratio.

Field: Part Load Based Exhaust Temperature curve

The Exhaust Temperature Curve is a quadratic equation that needs to be specified by a curve fit object. Used to determine the exhaust gas temperature as a function of part-load ratio.

Field: Temperature Based Exhaust Temperature curve

The Exhaust Temperature Curve is a quadratic equation that needs to be specified by a curve fit object. Used to determine the exhaust gas temperature as a function of part-load ratio.

Field: Heat Recovery Lube Energy curve

This alpha field contains the name of the Recovery Lube Heat curve. The curve itself is specified separately using a curve object (see Curve:Quadratic). The Recovery Lubricant Heat Curve is a quadratic equation that determines the ratio of recovery lube heat to fuel energy. Used to calculate the recoverable lube oil heat as a function of part-load ratio. The defining equation is:

$$RecoveryLubeHeatToFuelRatio = C_1 + C_2 RL + C_3 RL^2$$

where RL is the Ratio of Load to Rated Power Output.

UA Curve

The UA curve applies to the exhaust gas heat exchanger. The curve is an equation that determines the overall heat transfer coefficient for the exhaust gasses with the stack. The heat transfer coefficient ultimately helps determine the exhaust stack temperature. The defining equation is:

$$UAToCapacityRatio = C_1 GeneratorRatedPowerOutput^{C_2}$$

The following two fields contain the coefficients for the equation.

Field: Coefficient1 of UA curve

This numeric field contains the first coefficient for the overall heat transfer coefficient curve.

Field: Coefficient2 of UA curve

This numeric field contains the second (exponential) coefficient for the overall heat transfer coefficient curve.

Field: Maximum Exhaust Flow per KW of Power Output

Maximum exhaust flow per unit capacity for diesel engines. The parameter sets an upper limit on exhaust gas flow and exhaust gas heat recovery for diesel engines. Units: kg/sec per kW capacity

Field: Design Minimum Exhaust Temp (Steam Saturation Temperature)

This is the design engine stack saturated steam temperature in degrees C.

Field: Design Air Inlet Temperature

Design Air Inlet Temperature in degrees C.

Field: Fuel Heating Value

Heating Value of Fuel in KJ/kg

Field: Design heat recovery water volumetric flow rate

Design Water volumetric flow rate through heat recovery loop in m^3/sec.

Field: Heat_Recovery_Side_Inlet_Node

This alpha field contains the identifying name for the Gas Turbine generator heat recovery side inlet node.

Field: Heat_Recovery_Side_Outlet_Node

This alpha field contains the identifying name for the Gas Turbine generator heat recovery side outlet node.

```
GENERATOR:GAS TURBINE,
       \memo This generator model is the empirical model from the Building Loads
       \memo and System Thermodynamics (BLAST) program.  generator performance
       \memo curves are generated by fitting catalog data to second order
       \memo polynomial equations.  Three sets of coefficients are required.
  A1, \field Generator Name
  N1, \field Rated Power Output
  A2, \field Electric Circuit Node
  N2, \field Minimum Part Load Ratio
  N3, \field Maximum Part Load Ratio
  N4, \field Opt Part Load Ratio
  A3, \field Part Load Based Fuel Input curve
       \type object-list
       \object-list QuadraticCurve
       \note curve = a + b*PLR + c*PLR**2
       \note PLR = Ratio of Generator Load to Rated Power Output
       \note this curve is multiplied to the Temperature Based Fuel Input Curve
       \note to determine Fuel Energy In
  A4, \field Temperature Based Fuel Input curve
       \type object-list
       \object-list QuadraticCurve
       \note curve = a + b*AT + c*AT**2
       \note AT = Ambient Delta T
       \note this curve is multiplied to the Part Load Based Fuel Input Curve
       \note to determine Fuel Energy In
  A5, \field Exhaust Flow curve
       \type object-list
       \object-list QuadraticCurve
       \note curve = a + b*AT + c*AT**2
       \note AT = Ambient Delta T
  A6, \field Part Load Based Exhaust Temperature curve
       \type object-list
       \object-list QuadraticCurve
       \note curve = a + b*PLR + c*PLR**2
       \note PLR = Ratio of Generator Load to Rated Power Output
       \note this curve is multiplied to the Temperature Based Exhaust Temperature Curve
       \note to determine Exhaust Temperature
  A7, \field Temperature Based Exhaust Temperature curve
       \type object-list
       \object-list QuadraticCurve
       \note curve = a + b*AT + c*AT**2
       \note AT = Ambient Delta T
       \note this curve is multiplied to the Part Load Based Exhaust Temperatuer Curve
       \note to determine Exhaust Temperature
  A8, \field Heat Recovery Lube Energy curve
       \type object-list
       \object-list QuadraticCurve
       \note curve = a + b*PLR + c*PLR**2
       \note PLR = Ratio of Generator Load to Rated Power Output
  N5, \field Coefficient1 of UA curve
           \note curve = C1 * Rated Power Output**C2
  N6, \field Coefficient2 of UA curve
            \note curve = C1 * Rated Power Output**C2
```

```
  N7, \field Maximum Exhaust Flow per KW of Power Output
       \units
  N8, \field Design Minimum Exhaust Temp (Steam Saturation Temperature)
       \units C
  N9, \field Design Air Inlet Temperature
       \units C
  N10, \field Fuel Heating Value
       \units
  N11, \field Design heat recovery water flow rate
       \units m3/s
  A9 , \field Heat_Recovery_Side_Inlet_Node
  A10 ;\field Heat_Recovery_Side_Outlet_Node
```

And, an IDF example showing how it is used:

```
GENERATOR:GAS TURBINE, Solar Turbine,
        30000,                          !Rated Power Output
        GT gen Electric Node,           !Electric Circuit Node
        .15,                            !Min Part Load Ratio
        1.0,                            !Max Part Load Ratio
        .65,                            !Opt Part Load Ratio
        BG PL Based Fuel Input Curve,
        BG Temp Based Fuel Input Curve,
        BG Exhaust Flow Curve,
        BG PL Based Exhaust Temp Curve,
        BG Temp Based Exhaust Temp Curve,
        BG Tur Recovery Lube Heat Curve,
        0.01907045, 0.9,                !UA Coeffs
        11.72,
        25,                             !Maximum Exhaust Flow per KW Diesel Power Out
        150,                            !Design Steam Saturation Temperature (C)
        10700,                          !Fuel Heating Value (W-hours/L)
        0.00001,                        !Design heat recovery water flow rate (m3/s)
        Solar Turbine Heat Rec Inlet Node, Solar Turbine Heat Rec Outlet Node;
```

```
   CURVE:QUADRATIC,  BG PL Based Fuel Input Curve,
        9.41, -9.48, 4.32;
   CURVE:QUADRATIC,  BG Temp Based Fuel Input Curve,
       1.0044, -0.0008, 0;
   CURVE:QUADRATIC, BG Exhaust Flow Curve,
        0.05, 0.0,0.0;
   CURVE:QUADRATIC,  BG PL Based Exhaust Temp Curve,
        450,0,0;
   CURVE:QUADRATIC,  BG Temp Based Exhaust Temp Curve,
         1.005, 0.0018, 0;
   CURVE:QUADRATIC,  BG Tur Recovery Lube Heat Curve,
         0.223, -0.4, 0.2286;
```

Generator:Gas Turbine Outputs

The output variables that are available for the Gas Turbine Generator are:

```
HVAC,Average,Generator Electric Power Produced [W]
HVAC,Sum,Generator Electric Energy Produced [J]
Zone,Meter,ElectricityProduced:Facility [J]
Zone,Meter,ElectricityProduced:Plant [J]
Zone,Meter,Cogeneration:ElectricityProduced [J]

HVAC,Average,Generator Lube Heat Recovery Rate [W]
HVAC,Sum,Generator Lube Heat Recovery [J]

HVAC,Average,Generator Exhaust Heat Recovery Rate [W]
HVAC,Sum,Generator Exhaust Heat Recovery [J]

HVAC,Average,Generator Total Heat Recovery Rate [W]
HVAC,Sum,Generator Total Heat Recovery [J]

HVAC,Average,Generator Exhaust Stack Temp [C]

HVAC,Average,Generator Heat Recovery Inlet Temp [C]
HVAC,Average,Generator Heat Recovery Outlet Temp [C]
HVAC,Average,Generator Heat Recovery Mass Flow Rate [kg/s]

HVAC,Average,Generator Gas Consumption Rate [W]
Zone,Meter,Cogeneration:Gas [J]
HVAC,Sum,Generator Gas Consumption [J]
HVAC,Average,Generator Gas Mass Flow Rate [kg/s]
```

All of these outputs, except for the gas use outputs, are described above under "Generator:Diesel Outputs."

Generator Gas Consumption Rate [W]

Generator Gas Consumption [J]

Generator Gas Mass Flow Rate [kg/s]

These outputs are the natural gas fuel input to the electric generator. Consumption is metered on Cogeneration:Gas, Gas:Plant, and Gas:Facility.

Group – Photovoltaics

The photovoltaics group consists of one object as shown below. This object links to the TRNSYS program (Wintel platforms only) and performs a pre-calculation using the standard EnergyPlus weather file data. The screen will display the online plotting of the TRNSYS calculation progress (see field Online Graphics below for options). The calculations are then integrated into the standard EnergyPlus output scheme. In addition, the **eplusout.trn** file will show the listing results from the TRNSYS calculations.

In addition to the fields below, EnergyPlus calculates the "degrees east of the standard meridian" so that the correct solar time can be calculated in TRNSYS.

Photovoltaics

Field: Array Name

This field is the name of the PhotoVoltaic (PV) array. The name is only used as an identifier.

Field: Array Type

This field is the technology of the PV array – for example Crystalline, Amorphous Silicon, Copper Indium Diselenide. The technology name is only used as an identifier.

Field: January Average Ground Reflectance

This field is a decimal number between 0.0 and 1.0 and is used to characterize the average reflectivity of the ground in January. The ground reflectance is interpolated during the month.

Field: February Average Ground Reflectance

This field is a decimal number between 0.0 and 1.0 and is used to characterize the average reflectivity of the ground in February. The ground reflectance is interpolated during the month.

Field: March Average Ground Reflectance

This field is a decimal number between 0.0 and 1.0 and is used to characterize the average reflectivity of the ground in March. The ground reflectance is interpolated during the month.

Field: April Average Ground Reflectance

This field is a decimal number between 0.0 and 1.0 and is used to characterize the average reflectivity of the ground in April. The ground reflectance is interpolated during the month.

Field: May Average Ground Reflectance

This field is a decimal number between 0.0 and 1.0 and is used to characterize the average reflectivity of the ground in May. The ground reflectance is interpolated during the month.

Field: June Average Ground Reflectance

This field is a decimal number between 0.0 and 1.0 and is used to characterize the average reflectivity of the ground in June. The ground reflectance is interpolated during the month.

Field: July Average Ground Reflectance

This field is a decimal number between 0.0 and 1.0 and is used to characterize the average reflectivity of the ground in July. The ground reflectance is interpolated during the month.

Field: August Average Ground Reflectance

This field is a decimal number between 0.0 and 1.0 and is used to characterize the average reflectivity of the ground in August. The ground reflectance is interpolated during the month.

Field: September Average Ground Reflectance

This field is a decimal number between 0.0 and 1.0 and is used to characterize the average reflectivity of the ground in September. The ground reflectance is interpolated during the month.

Field: October Average Ground Reflectance

This field is a decimal number between 0.0 and 1.0 and is used to characterize the average reflectivity of the ground in October. The ground reflectance is interpolated during the month.

Field: November Average Ground Reflectance

This field is a decimal number between 0.0 and 1.0 and is used to characterize the average reflectivity of the ground in November. The ground reflectance is interpolated during the month.

Field: December Average Ground Reflectance

This field is a decimal number between 0.0 and 1.0 and is used to characterize the average reflectivity of the ground in December. The ground reflectance is interpolated during the month.

Field: Inverter Efficiency

This field is a decimal number between 0.0 and 1.0 which indicates the efficiency with which the inverter connected to the PV array converts the DC voltage delivered by the array to an AC voltage.

Field: Maximum Inverter Capacity

This field is the capacity of the inverter (in W). If the PV array produces more power than the capacity of the inverter, the inverter will automatically 'dump' the excess power without any warnings.

Note – a warning message will be produced if the inverter capacity looks like it will be exceeded. For example:

** Warning ** Inverter Capacity for PV=EASTARRAY is exceeded by 3201.65%

Field: Array Slope

This field is an angle (horizontal = 0, vertical = 90) which indicates the slope of the PV array.

Field: Array Azimuth

This field is an angle which indicates the direction that the PV array points. If the array faces due south, the azimuth is 0. If the array faces due west, the azimuth is 90, if the array faces due east, the azimuth is –90 and if the array faces north, the azimuth is +/– 180.

Field: Short Circuit Current

This field is the short circuit current (in Amps) for an individual module in the PV array at reference conditions.

Field: Open Circuit Voltage

This field is the open circuit voltage (in Volts) for an individual module in the PV array at reference conditions.

Field: Reference Temperature

This field is the ambient temperature (in Kelvin) at reference conditions. The value is usually 298K

Field: Reference Insolation

This field is the radiation level (in W/m^2) at reference conditions. The value is usually 1000 W/m^2.

Field: Voltage at Maximum Power

This field is module voltage (in Volts) at the maximum power point and reference conditions.

Field: Current at Maximum Power

This field is module current (in Amps) at the maximum power point and reference conditions.

Field: Temperature Coefficient of Short Circuit Current

This field accounts for the fact that the module short circuit current is temperature dependent. The coefficient is given in Amps/Kelvin.

Field: Temperature Coefficient of Open Circuit Voltage

This field accounts for the fact that the module open circuit voltage is temperature dependent. The coefficient is given in Volts/Kelvin.

Field: Number of Cells in Series

This field is an integer representing the number of individual cells wires in series to make up a single module. The typical number for a 12V crystalline silicon PV module is 36.

Field: Number of Modules in Parallel

This field is the number of modules wired in parallel to form an array that generates the desired current.

Field: Number of Modules in Series

This field is the number of modules wired in series to form an array that generates the desired voltage.

Field: NOCT Test Cell Temperature

This field is the cell temperature (in Kelvin) from the Nominal Operating Cell Temperature (NOCT) test.

Field: NOCT Test Ambient Temperature

This field is the ambient temperature (in Kelvin) from the Nominal Operating Cell Temperature (NOCT) test. The value is usually 293 (degrees Kelvin).

Field: NOCT Test Insolation

This field is the insolation level (in W/m^2) from the Nominal Operating Cell Temperature (NOCT) test. The value is usually 800 W/m^2.

Field: Active Module Area

This field is the active area of the PV module in m^2.

Field: tau-alpha product

This field indicates the transmittance-absorptance product at normal incidence angles for the PV modules. If the $\tau\alpha$ product is positive, that value will be used for all angles of incidence. If the value specified is negative, then the magnitude of the given value will be used for normal incidence and the Incidence Angle Modifier (IAM) correlation will be used for all other angles.

Field: Semiconductor Bandgap

This field is the semiconductor bandgap for the PV material. The bandgap for silicon is 1.12 eV (electron volts).

Field: Slope of IV Curve at Short-circuit Current Condition

This field is the slope (in Amps/Volt) of the IV (current voltage) curve at the short-circuit condition. If this value is < 0, the 5 parameter thin-film/amorphous silicon model will be used. If the value is > 0, the four parameter model for single / poly crystalline modules will be used.

Field: Online Graphics

If the value of this field is greater than 0, the online graphics for the PV simulation will be displayed. If it is negative, the online graphics will be replaced by a progress bar.

Field: Online Plot Axis Minimum

This field contains the minimum axis value (in Watts) for the PV online plot.

Field: Online Plot Axis Maximum

This field contains the maximum axis value (in Watts) for the PV online plot.

Field: Incidence Angle Modifier

This field is reserved for future use.

Field: Tracking

This field is reserved for future use.

```
PHOTOVOLTAICS,
   A1 , \field Array Name
   A2 , \field Array Type
  N1 , \field January Ground Reflectance
        \default 0.6
        \type real
        \minimum 0.0
        \maximum 1.0
        \units dimensionless
   N2 , \field February Ground Reflectance
        \default 0.6
        \type real
        \minimum 0.0
        \maximum 1.0
        \units dimensionless
   N3 , \field March Ground Reflectance
        \default 0.4
        \type real
        \minimum 0.0
        \maximum 1.0
        \units dimensionless
   N4 , \field April Ground Reflectance
        \default 0.3
        \type real
        \minimum 0.0
        \maximum 1.0
        \units dimensionless
   N5 , \field May Ground Reflectance
        \default 0.2
        \type real
        \minimum 0.0
        \maximum 1.0
        \units dimensionless
   N6 , \field June Ground Reflectance
        \default 0.2
        \type real
        \minimum 0.0
        \maximum 1.0
        \units dimensionless
   N7 , \field July Ground Reflectance
        \default 0.2
        \type real
        \minimum 0.0
        \maximum 1.0
        \units dimensionless
   N8 , \field August Ground Reflectance
        \default 0.2
        \type real
        \minimum 0.0
        \maximum 1.0
        \units dimensionless
   N9 , \field September Ground Reflectance
         \default 0.2
         \type real
         \minimum 0.0
         \maximum 1.0
         \units dimensionless
```

```
N10 , \field October Ground Reflectance
      \default 0.2
      \type real
      \minimum 0.0
      \maximum 1.0
      \units dimensionless
N11 , \field November Ground Reflectance
      \default 0.2
      \type real
      \minimum 0.0
      \maximum 1.0
      \units dimensionless
N12 , \field December Ground Reflectance
      \default 0.4
      \type real
      \minimum 0.0
      \maximum 1.0
      \units dimensionless
N13 , \field Inverter Efficiency
      \default 0.95
      \type real
      \minimum 0.0
      \maximum 1.0
      \units dimensionless
N14 , \field Maximum Inverter Capacity
      \default 10000
      \type real
      \units W
N15, \field Array Slope
      \default 45
      \type real
      \units deg
N16, \field Array Azimuth
      \default 0.0
      \type real
      \units deg
N17, \field Short Circuit Current
      \default 6.5
      \type real
      \units A
N18, \field Open Circuit Voltage
      \default 21.6
      \type real
      \units V
N19, \field Reference Temperature
      \default 298
      \type real
      \units K
N20, \field Reference Insolation
      \default 1000
      \type real
      \units W/m2
N21, \field Voltage at Max Power
      \default 17
      \type real
      \units V
N22 , \field Current at Max Power
      \default 5.9
      \type real
      \units A
N23 , \field Temperature Coef. of Isc
      \default -0.079
      \type real
      \units A/K
N24 , \field Temperature Coef. of Voc
      \default 0.02
      \type real
      \units V/K
N25 , \field Number of Cells in Series
      \default 36
      \type integer
```

```
       \minimum 0
       \units dimensionless
N26 , \field Number of Modules in Parallel
       \default 1
       \type integer
       \units dimensionless
N27 , \field Number of Modules in Series
       \default 1
       \type integer
       \units dimensionless
N28 , \field NOCT Test Cell Temperature
       \default 313
       \type real
       \units K
N29 , \field NOCT Test Ambient Temperature
       \default 293
       \type real
       \units K
N30 , \field NOCT Test Insolation
       \default 800
       \type real
       \units W/m2
N31 , \field Active Area
       \default 0.89
       \type real
       \units m2
N32 , \field tau-alpha Product
       \default 0.95
       \type real
       \minimum 0.0
       \maximum 1.0
       \units dimensionless
N33 , \field Semiconductor Bandgap
       \default 1.12
       \type real
       \units eV
N34 , \field Slope of IV Curve at Short Circuit
       \default 0.0
       \type real
       \maximum 0.0
       \units V/A
N35 , \field Suppress TRNSYS Online Plot
       \default 1
       \type integer
       \units dimensionless
N36 , \field PV Plot Axis Minimum
       \default -10.0
       \type real
       \units W
N37 , \field PV Plot Axis Maximum
       \default 5000.0
       \type real
       \units W
A3 , \field Incidence Angle Modifier
      \type alpha
A4 ; \field Tracking
      \type alpha
```

An IDF example:

```
PHOTOVOLTAICS,
 Zone1PV,     !Array Name
 Crystalline, !Array Type
 0.600,     !January Ground Reflectance
 0.600,     !February Ground Reflectance
 0.400,     !March Ground Reflectance
 0.300,     !April Ground Reflectance
 0.200,     !May Ground Reflectance
 0.200,     !June Ground Reflectance
 0.200,     !July Ground Reflectance
 0.200,     !August Ground Reflectance
 0.200,     !September Ground Reflectance
 0.200,     !October Ground Reflectance
 0.300,     !November Ground Reflectance
 0.400,     !December Ground Reflectance
```

```
 0.930,     !Inverter Efficiency
 10000.00,  !Maximum Inverter Capacity
 43.0,      !Array Slope
 0.0,       !Array Azimuth
 6.5,       !Short Circuit Current
 21.6,      !Open Circuit Voltage
 298,       !Reference Temperature
 1000.0,    !Reference Insolation
 17,        !Voltage at Max Power
 5.9,       !Current at Max Power
 -0.079,    !Temperature Coef. of Isc
 0.02,      !Temperature Coef. of Voc
 36,        !Number of Cells in Series
 2,         !Number of Modules in Parallel
 3,         !Number of Modules in Series
 313,       !NOCT Test Cell Temperature
 293,       !NOCT Test Ambient Temperature
 800.0,     !NOCT Test Insolation
 0.89,      !Active Area
 0.95,      !tau-alpha Product
 1.12,      !Semiconductor Bandgap
 0,         !Slope of IV Curve at Short Circuit
 1,         !1=display online plot/-1=supress plot
 -10,       !pv plot axis minimum
 5000,      !pv plot axis maximum
 Y,         !Incidence Angle Modifier Correlation
 Fixed;     !Tracking
```

PhotoVoltaics Outputs

```
Zone,Average,PV Inverter Electric Power Delivered[W]
Zone,Sum,PV Inverter Electric Energy Delivered[J]
Zone,Meter,ElectricityProduced:Facility [J]
Zone,Meter,ElectricityProduced:Plant [J]
Zone,Meter,Photovoltaic:ElectricityProduced [J]

Zone,Average,PV Array Electric Power Produced[W]
Zone,Sum,PV Array Electric Energy Produced[J]

Zone,Average,PV Array Max Power Produced[W]
```

PV Inverter Electric Power Delivered[W]

PV Inverter Electric Energy Delivered[J]

These outputs are the useable power delivered by the PV system and will be limited by the capacity of the inverter if the array itself produced more power than the inverter could handle. Energy is metered on Photovoltaic:ElectricityProduced, ElectricityProduced:Plant, and ElectricityProduced:Facility.

PV Array Electric Power Produced[W]

PV Array Electric Energy Produced[J]

These outputs are the electric power delivered to the inverter by the PV array.

PV Array Max Power Produced[W]

This is the PV array power at the maximum power point along the IV (current vs. voltage) curve.

Group – Performance Curves

This group of objects consists of polynomial curves which are used to characterize the performance of HVAC equipment. The curves are input, stored, and evaluated entirely within the CurveManager module. The curves are usually derived from fits or regressions to data covering a limited range. Results for independent variable values outside this range are likely to be invalid, so curve input always contains a range of validity (maximum and minimum permitted values) for each independent variable. No error or warning message is issued if an independent variable is outside the range. Instead, the curve manager uses the minimum value if an independent variable is less than the minimum, and the maximum if a variable exceeds the maximum.

Curve:Quadratic

Input for a quadratic curve consists of the curve name, the three coefficients, and the maximum and minimum valid independent variable values. The Input Data Dictionary description is shown below.

Field: Name

A user assigned unique name for an instance of a quadratic curve. When a curve is used, it is referenced by this name.

Field: Coeff1

The constant coefficient (C_1) in the equation: $y = C_1 + C_2 \cdot x + C_3 \cdot x^2$

Field: Coeff2

The linear coefficient (C_2) in the equation: $y = C_1 + C_2 \cdot x + C_3 \cdot x^2$

Field: Coeff3

The quadratic coefficient (C_3) in the equation: $y = C_1 + C_2 \cdot x + C_3 \cdot x^2$

Field: minimum value of x

The minimum allowable value of x. Values of x less than the minimum will be replaced by the minimum.

Field: maximum value of x

The maximum allowable value of x. Values of x greater than the maximum will be replaced by the maximum.

```
CURVE:QUADRATIC,
  A1 , \field Name
       \type alpha
       \reference QuadraticCurves
       \note curve = C1 + C2*x + C3*x**2
  N1 , \field Coeff1
       \type real
  N2 , \field Coeff2
       \type real
  N3 , \field Coeff3
       \type real
  N4 , \field minimum value of x
       \type real
  N5 ; \field maximum value of x
       \type real
```

Following is an example input.

```
CURVE:QUADRATIC,
       WindACCBFFFF, ! name
       -2.277,       ! coeff1
       5.2114,       ! coeff2
       -1.9344,      ! coeff3
       0.0,          ! min
       1.0;          ! max
```

Curve:Cubic

Input for a cubic curve consists of the curve name, the 4 coefficients, and the maximum and minimum valid independent variable values. The Input Data Dictionary description is shown below.

Field: Name

A user assigned unique name for an instance of a cubic curve. When a curve is used, it is referenced by this name.

Field: Coeff1

The constant coefficient (C_1) in the equation: $y = C_1 + C_2 \cdot x + C_3 \cdot x^2 + C_4 \cdot x^3$

Field: Coeff2

The linear coefficient (C_2) in the equation: $y = C_1 + C_2 \cdot x + C_3 \cdot x^2 + C_4 \cdot x^3$

Field: Coeff3

The quadratic coefficient (C_3) in the equation: $y = C_1 + C_2 \cdot x + C_3 \cdot x^2 + C_4 \cdot x^3$

Field: Coeff4

The cubic coefficient (C_4) in the equation: $y = C_1 + C_2 \cdot x + C_3 \cdot x^2 + C_4 \cdot x^3$

Field: minimum value of x

The minimum allowable value of x. Values of x less than the minimum will be replaced by the minimum.

Field: maximum value of x

The maximum allowable value of x. Values of x greater than the maximum will be replaced by the maximum.

```
CURVE:CUBIC,
  A1 , \field Name
       \type alpha
       \reference CubicCurves
       \note curve = C1 + C2*x + C3*x**2 + C4*x**3
  N1 , \field Coeff1
       \type real
  N2 , \field Coeff2
       \type real
  N3 , \field Coeff3
       \type real
  N4 , \field Coeff4
       \type real
  N5 , \field minimum value of x
       \type real
  N6 ; \field maximum value of x
       \type real
```

Following is an input example.

```
CURVE:CUBIC,
       WindACEIRFPLF, ! name
       .00000273404,  ! coeff1
       1.05259,       ! coeff2
       -.0552087,     ! coeff3
       .00262236,     ! coeff4
       0.0, ! min
       1.1; ! max
```

Curve:Biquadratic

This curve is a function of two independent variables. Input consists of the curve name, the six coefficients, and min and max values for each of the independent variables. The following shows the Input Data Dictionary definition of the object.

Field: Name

A user assigned unique name for an instance of a biquadratic curve. When a curve is used, it is referenced by this name.

Field: Coeff1

The constant coefficient (C_1) in the equation: $z = C_1 + C_2 \cdot x + C_3 \cdot x^2 + C_4 \cdot y + C_5 \cdot y^2 + C_6 \cdot x \cdot y$

Field: Coeff2

The coefficient C_2 in the equation: $z = C_1 + C_2 \cdot x + C_3 \cdot x^2 + C_4 \cdot y + C_5 \cdot y^2 + C_6 \cdot x \cdot y$

Field: Coeff3

The coefficient C_3 in the equation: $z = C_1 + C_2 \cdot x + C_3 \cdot x^2 + C_4 \cdot y + C_5 \cdot y^2 + C_6 \cdot x \cdot y$

Field: Coeff4

The coefficient C_4 in the equation: $z = C_1 + C_2 \cdot x + C_3 \cdot x^2 + C_4 \cdot y + C_5 \cdot y^2 + C_6 \cdot x \cdot y$

Field: Coeff5

The coefficient C_5 in the equation: $z = C_1 + C_2 \cdot x + C_3 \cdot x^2 + C_4 \cdot y + C_5 \cdot y^2 + C_6 \cdot x \cdot y$

Field: Coeff6

The coefficient C_6 in the equation: $z = C_1 + C_2 \cdot x + C_3 \cdot x^2 + C_4 \cdot y + C_5 \cdot y^2 + C_6 \cdot x \cdot y$

Field: minimum value of x

The minimum allowable value of x. Values of x less than the minimum will be replaced by the minimum.

Field: maximum value of x

The maximum allowable value of x. Values of x greater than the maximum will be replaced by the maximum

Field: minimum value of y

The minimum allowable value of y. Values of y less than the minimum will be replaced by the minimum

Field: maximum value of y

The maximum allowable value of y. Values of y greater than the maximum will be replaced by the maximum

```
CURVE:BIQUADRATIC,
  A1 , \field Name
       \type alpha
       \reference BiquadraticCurves
       \note curve = C1 + C2*x + C3*x**2 + C4*y + C5*y**2 + C6*x*y
  N1 , \field Coeff1
       \type real
  N2 , \field Coeff2
       \type real
  N3 , \field Coeff3
       \type real
  N4 , \field Coeff4
       \type real
  N5 , \field Coeff5
       \type real
  N6 , \field Coeff6
       \type real
  N7 , \field minimum value of x
       \type real
  N8 , \field maximum value of x
       \type real
  N9 , \field minimum value of y
       \type real
  N10; \field maximum value of y
       \type real
```

Below is an example input.

```
CURVE:BIQUADRATIC,
       WindACCoolCapFT, ! name
       0.942587793,     ! coeff1
       0.009543347,     ! coeff2
       0.000683770,     ! coeff3
       -0.011042676,    ! coeff4
       0.000005249,     ! coeff5
       -0.000009720,    ! coeff6
       15., 22., ! min and max of first independent variable
       29., 47.; ! min and max of second independent variable
```

Group – Fluid Properties

The Fluid Property routines in EnergyPlus have been designed for ease of use and to allow users to add refrigerant and glycol data to the input file without having to make any changes to the program code. Fluid properties are calculated by interpolating the tabulated data in the input file. The main input requirement input is that in order to add a new fluid, a user must enter a full set of data. The user may determine the interval between data points according to

the desired accuracy and range required. Data for a number of common fluids are available in the required format so that the user may append this data to their input file.

Each fluid is categorized as either a 'Refrigerant' or 'Glycol'. Refrigerant data is further categorized as either saturated or superheated. Saturated refrigerant data is indexed, in the input data, according to pressure and temperature i.e. the specific heat, density, enthalpy in the input data are given for a given combination of pressure and temperature. Saturated refrigerant data is indexed according to pressure and quality. In the case of saturated pressure data only a temperature index is used. Glycol data is indexed in the input data according to temperature and concentration. The data structure for each property is essentially two-dimensional (a matrix).

In most cases there will be combinations of index variable (e.g. some combination of pressure and temperature) at which either no data is available, or the property data is invalid/irrelevant. For example, in the superheated refrigerant data, some combinations of temperature and pressure may correspond to a state in the saturated rather than superheated region. Similarly, in the case of glycols there may be some combinations of temperature and concentration that would correspond to the frozen state. In these cases, and where data is just not available, a zero should be present in the data at these points to indicate an invalid condition. EnergyPlus uses the presence of zeros to detect invalid conditions and give warning messages.

Note that binary fluids (e.g. water) that do not have properties that vary with concentration can also be specified in the input data as a 'glycol'. This is done by entering one set of data with a specified concentration of zero, and a second set of data with a specified concentration of one. This ensures that the same property value is calculated for any given concentration.

FluidNames

The names, of each fluid for which property data is given in the user input, have to be specified in a FluidNames data object. If data is to be included for a given fluid, either a refrigerant or a glycol, then its name must be included in the FluidNames data.

Field: Fluid Name

Each fluid name is a unique identifier that will be used in conjunction with the data statements described later in this section. The fluid name is also used in the loop data objects. This list is simply a list of available fluids present in the input data file.

Field: Fluid Type

Each fluid name must be identified by type - either REFRIGERANT or GLYCOL. This designation determines what type of data EnergyPlus expects for the fluid name. If the fluid name is defined as a REFRIGERANT, the user must supply valid data for pressure, enthalpy, specific heat, and density in the saturated region and enthalpy and density in the superheated region. If the fluid name is defined as a GLYCOL, the user must supply valid data for specific heat at various concentrations (percentage of non-water liquid).

```
FluidNames,
       \unique-object
       \memo list of potential fluid names/types in the input file, max of 10
  A1,  \field fluid name 1
       \type alpha
  A2,  \field type of fluid for fluid name 1
       \type choice
       \key REFRIGERANT
       \key GLYCOL
  A3,  \field fluid name 2
       \type alpha
  A4,  \field type of fluid for fluid name 2
       \type choice
       \key REFRIGERANT
       \key GLYCOL
  . . . same thing repeated over and over again . . .
  A19, \field fluid name 10
       \type alpha
  A20; \field type of fluid for fluid name 10
       \type choice
       \key REFRIGERANT
       \key GLYCOL
```

An example of this statement in an input data file is:

```
FluidNames,
  R11, REFRIGERANT,
  R12, REFRIGERANT,
  R22, REFRIGERANT,
  NH3, REFRIGERANT,
  Steam, REFRIGERANT,
  EthyleneGlycol, GLYCOL,
  PropyleneGlycol, GLYCOL;
```

FluidPropertyTemperatures

It is assumed that all fluid properties vary with temperature. A common set of temperatures is required for each set of fluid property data. Fluid property data supplied by the user must correspondingly be given at these temperatures. Since in most cases, refrigerant data can be specified at a common set of temperatures, a single set of 'FluidPropertyTemperatures' can be referenced by a number of sets of property data. This provides a more compact input structure and avoids listing the temperatures multiple times. In the case of glycol data the same set of temperatures have to be used for each set of data at a given concentration. Units for the temperatures are degrees Celsius.

Field: Temperature List Name

This field is simply an unique identifier name that is used to cross reference the list of temperatures with a specific list of fluid property data. A single temperature list can be used for more than one thermal property or fluid. For example, the same temperature list can be used for the superheated enthalpy of a refrigerant and the specific heat of a glycol if appropriate.

Field(s) 1-250: Temperature

These fields (up to 250) are the temperatures at which the data for the thermal properties are to be expected. Temperatures are assumed to be in ascending order in units of Celsius.

```
FluidPropertyTemperatures,
      \memo property values for fluid properties
      \memo list of up to 250 temperatures, note that number of property
      \memo values must match the number of properties
      \memo in other words, there MUST be a one-to-one correspondance between
      \memo the property values in this list and
      \memo the actual properties list in other syntax
      \units degrees C (for all temperature inputs)
  A1, \field temperature list name
      \type alpha
  N1, \field temperature 1
      \type real
  N2, \field temperature 2
      \type real
  . . . same thing repeated over and over again . . .
  N250; \field temperature 250
        \type real
```

An example of this statement in an input data file is:

```
FluidPropertyTemperatures,
      R11Temperatures,
      -70,-65,-60,-55,-50,-45,-40,-35,-30,-25,-20,-15,-10,-5,0,2,4,6,8,10,12,
      14,16,18,20,22,24,26,28,30,32,34,36,38,40,42,44,46,48,50,55,60,65,70,
      75,80,85,90,95,100,105,110,115,120,125,130,135,140,145,150,155,160,
      165,170,175,180,185,190,198;
```

FluidPropertySaturated

Refrigerant property data for the saturated region is entered with the following syntax. For each set of property data a unique name, the type of property, phase and the corresponding list of temperatures have to be specified along with the property values.

Field: Fluid Name

This name identifies the fluid for which data follows in the remaining syntax. This fluid name must also be given in the fluid names list (ref: FluidNames) as a REFRIGERANT.

Field: Fluid Property Type

This field identifies the fluid property for which data is being entered with this statement. The options for the saturated region are ENTHALPY, DENSITY, SPECIFICHEAT, and PRESSURE. The units for these properties are J/kg, kg/m^3, J/kg-K and Pa, respectively.

Field: Fluid Phase

In the saturated region, each property has two values: one for the saturated liquid state and one for the saturated gaseous state. Accordingly, the phase for which the saturated property data applies is specified as either FLUID or FLUIDGAS. Data for each phase are required and are interpolated according to quality. However, in the case of saturated pressure data values for only one phase are required (i.e. can be specified with phase specified as either FLUID or FLUIDGAS, as this is irrelevant).

Field: Temperatures List Name

This name refers to the corresponding list of temperatures (ref: FluidPropertyTemperatures). Each temperature in the temperature list corresponds to a data item found in the remaining fields of this syntax. The first temperature in the temperature list corresponds to the first fluid property value, the second temperature in the temperature list corresponds to the second fluid property value, etc.

Field(s) 1-250: Fluid Property Value

These fields (up to 250) are the values of the thermal property specified in the fluid property type field for the phase specified in the fluid phase field. The temperature list specified in the temperature list name field links the data with the corresponding temperatures.

```
FluidPropertySaturated,
      \memo fluid properties for the saturated region
  A1, \field fluid name (R11, R12, etc.)
      \reference FluidNames
  A2, \field fluid property type
      \note ENTHALPY Units are J/kg
      \note DENSITY Units are kg/m3
      \note SPECIFICHEAT Units are J/kg-K
      \note PRESSURE Units are Pa
      \type choice
      \key ENTHALPY     ! Units are J/kg
      \key DENSITY      ! Units are kg/m3
      \key SPECIFICHEAT ! Units are J/kg-K
      \key PRESSURE     ! Units are Pa
  A3, \field fluid phase
      \note FLUID=saturated fluid
      \note FLUIDGAS=difference between saturated fluid and saturated vapor
      \type choice
      \key FLUID        ! saturated fluid
      \key FLUIDGAS     ! difference between saturated fluid and saturated vapor
  A4, \field temperatures list name
      \reference FluidPropertyTemperatures
  N1, \field property value 1
      \type real
  N2, \field property value 2
      \type real
  . . . same thing repeated over and over again . . .
  N250; \field property value 250
        \type real
```

An example of this statement in an input data file is:

```
FluidPropertySaturated,
      R11,ENTHALPY,FLUID,R11Temperatures, ! Enthalpy in J/kg
      153580,154600,156310,158580,161300,164380,167740,171330,175100,179020,183060,
      187190,191400,195680,200000,201740,203490,205240,207000,208770,210530,212310,
      214080,215870,217650,219860,221230,223030,224830,226630,228860,230250,232060,
      233860,235700,237520,239350,241180,243010,246350,249450,254080,258730,263480,
      268110,272860,277000,282410,287240,292120,297030,302000,307090,312080,317210,
      322400,327670,333020,338460,344010,349680,355500,361480,367690,374100,381060,
      388850,397280,426300;
```

FluidPropertySuperheated

The format of the data for the superheated region is similar to that of the saturated region but with the addition of the pressure for which each set of property values applies. A single temperature specification (Ref: FluidPropertyTemperatures) is required for each set of property data at a number of pressures.

Field: Fluid Name

This name identifies the fluid for which data follows in the remaining syntax. This fluid name must show up in the fluid names list (ref: FluidNames) as a REFRIGERANT.

Field: Fluid Property Type

This field identifies the fluid property for which data is being entered with this statement. The options for the superheated region are ENTHALPY and DENSITY. The units for these properties are J/kg and kg/m^3, respectively.

Field: Temperatures List Name

This name refers to the corresponding list of temperatures (ref: FluidPropertyTemperatures). Each temperature in the temperature list corresponds to a given property data item at each pressure. The first temperature in the temperature list corresponds to the first fluid property value, the second temperature in the temperature list corresponds to the second fluid property value, etc.

Field: Pressure

In the superheated region, each fluid property is indexed according to temperature and pressure. Thus, a pressure must be listed for each set of property values. The units for pressure are Pascals (Pa). Lists of properties are various pressures and temperatures form a two-dimensional table from which EnergyPlus interpolates to find the property value at a specified temperature and pressure.

Field(s) 1-250: Fluid Property Value

These fields (up to 250) are the values of the thermal property specified in the fluid property type field for the phase specified in the fluid phase field. The temperature list specified in the temperature list name field links the data with the corresponding temperatures.

```
FluidPropertySuperheated,
      \memo fluid properties for the saturated region
  A1, \field fluid name (R11, R12, etc.)
      \reference FluidNames
  A2, \field fluid property type
      \type choice
      \note ENTHALPY Units are J/kg
      \note DENSITY Units are kg/m3
      \note SPECIFICHEAT Units are J/kg-K (Currently this data is not used, entered, or expected)
      \type choice
      \key ENTHALPY     ! Units are J/kg
      \key DENSITY      ! Units are kg/m3
      \key SPECIFICHEAT ! Units are J/kg-K (Currently this data is not used, entered, or expected)
  A3, \field temperatures list name
      \reference FluidPropertyTemperatures
  N1, \field pressure
      \memo pressure for this list of properties
      \type real
      \units Pa
      \minimum> 0.0
  N2, \field property value 1
      \type real
  N3, \field property value 2
      \type real
  . . . same thing repeated over and over again . . .
  N251; \field property value 250
        \type real
```

An example of this statement in an input data file is:

```
FluidPropertySuperheated,
    R11,DENSITY,SuperR11Temperatures, ! Density in kg/m^3
    62000., !Pressure = 62000Pa
    0,0,0,0,0,0,0,0.0139,0.0134,0.0129,0.0124,0.012,0.0116,0.0112,0.0109,0.0105,
    0.0102,0.0099,0.0097,0.0094,0.0092,0.0089,0,0,0,0,0,0,0,0,0,0;
```

Glycol Fluid Type

A full data set for a glycol fluid type in EnergyPlus includes: a temperature list and lists of values for specific heat at a given concentration. Data have to be given for at least two different concentrations. The syntax lines for the property value lists are described below.

FluidPropertyConcentration

The format of the data for the glycols is similar to that of superheated refrigerants except that data at a number of concentrations is given, rather than pressures. The concentration is listed before the rest of the data and is normalized (i.e. in the range 0.0 to 1.0, rather than a percentage). Note that glycol solutions are assumed to exist in liquid form only in EnergyPlus.

Field: Fluid Name

This name identifies the fluid for which data follows in the remaining syntax. This fluid name must show up in the fluid names list (ref: FluidNames) as a GLYCOL.

Field: Fluid Property Type

This field identifies the fluid property for which data is being entered with this statement. The only current option for glycols is SPECIFICHEAT with units of J/kg-K.

Field: Temperatures List Name

This name refers to the corresponding list of temperatures (ref: FluidPropertyTemperatures). Each temperature in the temperature list corresponds to a data item found in the remaining fields of this syntax. The first temperature in the temperature list corresponds to the first fluid property value, the second temperature in the temperature list corresponds to the second fluid property value, etc.

Field: Concentration

A concentration must be listed for the values of specific heat that follow. Lists of properties are various concentrations and temperatures form a two-dimensional table from which EnergyPlus interpolates to find the property value at a specified temperature and concentration. Concentrations are specified in a normalized form (i.e. in the range 0.0 to 1.0, rather than a percentage)

Field(s) 1-250: Fluid Property Value

These fields (up to 250) are the values of the thermal property specified in the fluid property type field for the phase specified in the fluid phase field. The temperature list specified in the temperature list name field links the data with the corresponding temperatures.

```
FluidPropertyConcentration,
      \memo fluid properties for water/other fluid mixtures
  A1, \field fluid name (ethylene glycol, etc.)
      \reference FluidNames
  A2, \field fluid property type
      \type choice
      \note SPECIFICHEAT Units are J/kg-K
      \key SPECIFICHEAT ! Units are J/kg-K
  A3, \field temperatures list name
      \reference FluidPropertyTemperatures
  N1, \field concentration
      \memo glycol concentration for this list of properties
      \type real
      \units normalized (as a real decimal)
      \minimum 0.0
      \maximum 1.0
  N2, \field property value 1
      \type real
  N3, \field property value 2
      \type real
  . . . same thing repeated over and over again . . .
  N251; \field property value 250
        \type real
```

An example of this statement in an input data file is:

```
FluidPropertyConcentration,
     PropyleneGlycol,SPECIFICHEAT ,GlycolTemperatures, ! Spec. heat in J/kg-K
     0.8, ! Concentration
     2572,2600,2627,2655,2683,2710,2738,2766,2793,2821,2849,2876,2904,2931,2959,
     2987,3014,3042,3070,3097,3125,3153,3180,3208,3236,3263,3291,3319,3346,3374,
     3402,3429,3457;
```

Input for Output

Several items are used to specify what will appear in the output file(s). The output is described in the next section of this document.

Group – Report

Report

Several reports have been installed in EnergyPlus. They are accessed by the Report object.

```
Report,
  A1 , \field Type_of_Report
       \type choice
       \key Variable Dictionary
       \key Surfaces
       \key Construction
  A2 ; \field Name_of_Report
       \note only applicable to key=Surfaces
       \type choice
       \key DXF
       \key LINES
       \key DETAILS
       \key Vertices
       \key DetailsWithVertices
```

Field: Type_of_Report

Currently there are three values which satisfy this alpha field: Surfaces, Construction, and Variable Dictionary. These are described in the paragraphs following the Name_of_Report field.

Field: Name_of_Report

This alpha field is only used for the "Surface" type report and can be either DXF or Lines. These reports are described in the next few paragraphs.

Type_of_Report = Surfaces

Surfaces can be reported in several ways:

Surfaces Report: DXF

```
Report, Surfaces, DXF;
```

The above IDF specification will produce a DXF file (**eplusout.dxf**) of the surfaces in the IDF file. Several software programs can render this file into something viewable. For example:

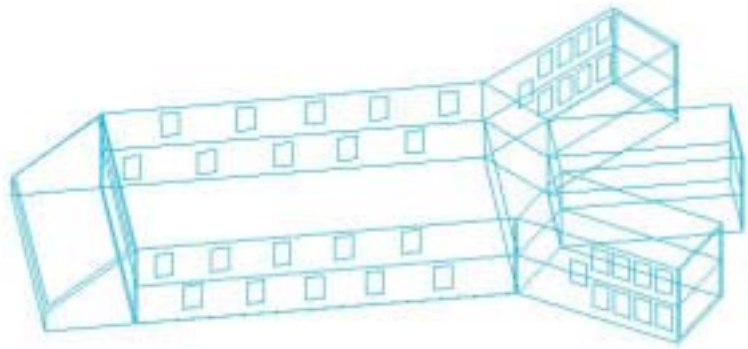

Figure 72. Example building from DXF report.

Surfaces Report: Lines

```
Report, Surfaces, lines;
```

The above IDF line will produce a simple file of line segments that constitute the surfaces in the IDF file.

The following shows an excerpt of "lines" report (**eplusout.sln**) for a single surface. It gives the coordinates in the "standard" EnergyPlus fashion (that is, UpperLeftCorner first and proceeding around, in this case, the four vertices in the surface.

```
      0.00,      0.00,      4.57,      0.00,      0.00,      0.00
      0.00,      0.00,      0.00,     15.24,      0.00,      0.00
     15.24,      0.00,      0.00,     15.24,      0.00,      4.57
     15.24,      0.00,      4.57,      0.00,      0.00,      4.57
```

Surfaces Report: Details

This report (in **eplusout.eio**) contains details about each surface – including surface name, zone Location, area, approximate height and width, tilt, outward facing angle. Specific details on this report can be found in the Output Details and Examples document.

Surfaces Report: Vertices

This report (in **eplusout.eio**) contains the vertices of each surface along with surface name and other information. Specific details on this report can be found in the Output Details and Examples document.

Surfaces Report: DetailsWithVertices

This report (in **eplusout.eio**) is the combination of the two preceding reports (details and vertices). Specific details on this report can be found in the Output Details and Examples document.

Type_of_Report = Variable Dictionary

This report (**eplusout.rdd**) may be necessary before you can ask for specific output variables. Variables available, to some extent, depend on the simulation input. Variables are "set up" during the initial "get input" processing done within the modules. Therefore, an item that is specific to a certain type of coil would not be available if that coil were not used during the simulation. This command will produce a list of variables available for reporting.

```
Report, Variable Dictionary;
```

An example of the results:

```
Program Version,EnergyPlus <version number indicated>
 Var Type,Var Report Type,Variable Name [Units]
Zone,Average,Outdoor Dry Bulb [C]
Zone,Average,Outdoor Barometric Pressure [Pa]
Zone,Average,Outdoor Wet Bulb [C]
Zone,Average,Outdoor Humidity Ratio [kgWater/kgAir]
Zone,Average,Wind Speed [m/s]
Zone,Average,Wind Direction [degree]
Zone,Average,Sky Temperature [C]
Zone,Average,Diffuse Solar [W/m2]
Zone,Average,Direct Solar [W/m2]
Zone,Average,Ground Reflected Solar [W/m2]
Zone,Average,Ground Temperature [C]
Zone,Average,Outdoor Dew Point [C]
Zone,Average,Outdoor Enthalpy [J/kg]
Zone,Average,Outdoor Relative Humidity [%]
Zone,Average,Outdoor Air Density [kg/m3]
Zone,Average,Solar Azimuth Angle [degree]
Zone,Average,Solar Altitude Angle [degree]
Zone,Average,Solar Hour Angle [degree]
Zone,Average,Zone Transmitted Solar[W]
Zone,Average,Zone Window Heat Gain[W]
Zone,Average,Zone Window Heat Loss[W]
Zone,Average,Surface Ext Sunlit Area [m2]
Zone,Average,Surface Ext Sunlit Fraction []
Zone,Average,Surface Ext Solar Incident[W/m2]
Zone,Average,Surface Ext Solar Beam Incident[W/m2]
Zone,Average,Surface Ext Solar Sky Diffuse Incident[W/m2]
Zone,Average,Surface Ext Solar Ground Diffuse Incident[W/m2]
Zone,Average,Surface Ext Solar Beam Cosine Of Incidence Angle[]
Zone,Average,SUMHAT[J]
Zone,Average,Mean Radiant Temperature[C]
Zone,Sum,Zone-Total Latent Gain[J]
Zone,Sum,Zone-Total Radiant Heat Gain[J]
Zone,Sum,Zone-Total Convective Heat Gain[J]
Zone,Sum,Zone-Total Lost Heat Gain[J]
Zone,Sum,Zone-Total Electric Consumption[J]
Zone,Sum,Zone-Total Visible Heat Gain[J]
Zone,Average,People-Number of Occupants[]
Zone,Sum,People-Radiant Heat Gain[J]
Zone,Sum,People-Convective Heat Gain[J]
Zone,Sum,People-Sensible Heat Gain[J]
Zone,Sum,People-Latent Heat Gain[J]
Zone,Sum,Lights-Return Air Heat Gain[J]
Zone,Sum,Lights-Radiant Heat Gain[J]
Zone,Sum,Lights-Convective Heat Gain[J]
Zone,Sum,Lights-Visible Heat Gain[J]
Zone,Sum,Lights-Total Heat Gain[J]
```

```
Zone,Meter,Electricity:Facility [J]
Zone,Meter,Electricity:Building [J]
Zone,Meter,Electricity:Zone:RESISTIVE ZONE [J]
Zone,Meter,Electricity:Zone:EAST ZONE [J]
Zone,Meter,Electricity:Zone:NORTH ZONE [J]
Zone,Meter,GeneralLights:Electricity [J]
Zone,Meter,GeneralLights:Electricity:Zone:RESISTIVE ZONE [J]
Zone,Meter,GeneralLights:Electricity:Zone:EAST ZONE [J]
Zone,Meter,GeneralLights:Electricity:Zone:NORTH ZONE [J]
Zone,Sum,Lights-Electric Consumption[J]
Zone,Sum,Electric Eq-Total Heat Gain[J]
Zone,Sum,Electric Eq-Radiant Heat Gain[J]
Zone,Sum,Electric Eq-Convective Heat Gain[J]
Zone,Sum,Electric Eq-Latent Heat Gain[J]
Zone,Sum,Electric Eq-Lost Heat Gain[J]
Zone,Meter,ZoneSource:Electricity [J]
Zone,Sum,Electric Eq-Consumption[J]
Zone,Average,Mean Air Temperature[C]
HVAC,Sum,Zone/Sys Sensible Heating Energy[J]
HVAC,Sum,Zone/Sys Sensible Cooling Energy[J]
HVAC,Average,Zone/Sys Sensible Heating Rate[W]
HVAC,Average,Zone/Sys Sensible Cooling Rate[W]
HVAC,Average,Zone/Sys Air Temp[C]
HVAC,Average,Zone Air Humidity Ratio[]
HVAC,Sum,HVACManage Iterations
HVAC,Sum,Direct Air Sensible Heating Energy[J]
HVAC,Sum,Direct Air Sensible Cooling Energy[J]
HVAC,Average,Direct Air Sensible Heating Rate[W]
HVAC,Average,Direct Air Sensible Cooling Rate[W]
HVAC,Sum,Baseboard Energy[J]
HVAC,Average,Baseboard Rate[W]
HVAC,Sum,Max SimAir Iterations
HVAC,Average,Fan Power[W]
HVAC,Average,Fan Delta Temp[C]
HVAC,Sum,Fan Energy[J]
HVAC,Sum,Total Water Coil Energy[J]
HVAC,Sum,Sensible Water Coil Energy[J]
HVAC,Average,Total Water Coil Rate[W]
HVAC,Average,Sensible Water Coil Rate[W]
HVAC,Average,Plant Loop Cooling Demand[W]
HVAC,Average,Plant Loop Heating Demand[W]
HVAC,Average,Plant Loop InletNode Flowrate[kg/s]
HVAC,Average,Plant Loop InletNode Temperature[C]
HVAC,Average,Plant Loop OutletNode Temperature[C]
HVAC,Average,Debug Unmet Plant Loop Demand[W]
HVAC,Average,Debug Plant Loop RemDemand[W]
HVAC,Average,Debug Plant Loop Bypass Fraction
HVAC,Average,Debug SSInletNode Flowrate[kg/s]
HVAC,Average,Debug SSInletNode Temperature[C]
HVAC,Average,Debug SSOutletNode Flowrate[kg/s]
HVAC,Average,Debug SSOutletNode Temperature[C]
HVAC,Sum,Variable Speed Pump Energy[J]
HVAC,Average,Variable Speed Pump Power[W]
HVAC,Average,Variable Speed Pump Shaft Power[W]
HVAC,Average,Variable Speed Pump Heat To Fluid[W]
HVAC,Average,Variable Speed Pump Outlet Temp[C]
HVAC,Average,Variable Speed Pump Mass Flow Rate[kg/s]
HVAC,Sum,Chiller Energy[J]
HVAC,Average,Chiller Evap Heat Trans Rate[W]
HVAC,Sum,Chiller Evap Heat Trans [J]
HVAC,Average,Chiller Evap Water Inlet Temp[C]
HVAC,Average,Chiller Evap Water Outlet Temp[C]
HVAC,Average,Chiller Evap Water mass flow rate[kg/s]
HVAC,Average,Chiller Cond Heat Trans Rate[W]
HVAC,Sum,Chiller Cond Heat Trans [J]
HVAC,Average,Chiller Cond Water Inlet Temp[C]
HVAC,Average,Chiller Cond Water Outlet Temp[C]
HVAC,Average,Chiller Cond Water mass flow rate[kg/s]
HVAC,Average,Chiller Power[W]
HVAC,Sum,Purchased Chilled Water Energy[J]
HVAC,Average,Purchased Chilled Water Rate[W]
```

```
HVAC,Average,Purchased Cooling Rate[W]
HVAC,Average,Purchased Cooling Inlet Temp[C]
HVAC,Average,Purchased Cooling Outlet Temp[C]
HVAC,Average,Purchased Cooling Mass Flow Rate[kg/s]
HVAC,Sum,Purchased Hot Water Energy[J]
HVAC,Average,Purchased Hot Water Rate[W]
HVAC,Average,Purchased Heating Rate[W]
HVAC,Average,Purchased Heating Inlet Temp[C]
HVAC,Average,Purchased Heating Outlet Temp[C]
HVAC,Average,Purchased Heating Mass Flow Rate[kg/s]
HVAC,Average,Condenser Loop Inlet Temperature [C]
HVAC,Average,Condenser Loop Outlet Temperature [C]
HVAC,Average,Condenser Loop Bypass Fraction
HVAC,Average,Single-Speed Tower Water Inlet Temp[C]
HVAC,Average,Single-Speed Tower Water Outlet Temp[C]
HVAC,Average,Single-Speed Tower Water Mass Flow Rate[kg/s]
HVAC,Average,Single-Speed Tower Heat Transfer[W]
HVAC,Average,Single-Speed Tower Fan Electric Power[W]
HVAC,Sum,Single-Speed Tower Fan Electric Consumption[J]
HVAC,Average,System Node Temp[C]
HVAC,Average,System Node MassFlowRate[kg/s]
HVAC,Average,System Node Humidity Ratio
Zone,Average,FangerPMV
Zone,Average,PiercePMVET
Zone,Average,PiercePMVSET
Zone,Average,PierceDISC
Zone,Average,PierceTSENS
Zone,Average,KsuTSV
```

"**Zone**" variables are calculated and can be reported after each Zone/Heat Balance timestep (ref: TimeSteps in Hour command). "**HVAC**" variables are calculated and can be reported with each variable HVAC timestep. "Average" variables will be averaged over the time interval being reported whereas "sum" variables are summed over that time interval.

Type_of_Report = Constructions

This is one of the reports that will appear in the "**eplusout.eio**" file. It will show the calculated conduction transfer functions for each construction. It also includes similar details about the windows. Specific details on this report can be found in the Output Details and Examples document.

```
Report,Constructions;
```

And the example output:

```
! <Construction>,Construction Name,#Layers,#CTFs,Thermal Conductance {w/m2-K},
!OuterThermalAbsorptance,InnerThermalAbsorptance,OuterSolarAbsorptance,InnerSolarAbsorptance,Roughness
! <Material>,Material Name,Thickness {m},Conductivity {w/m-K},Density {kg/m3},
!Specific Heat {J/kg-K},Resistance {m2-K/w}
! <CTF>,Time,Outside,Cross,Inside,Flux (except final one)
 Construction,R13WALL,   1,   1,   0.900,   0.900,   0.750,   0.750,Rough
 Material,R13LAYER,  0.0000,     0.000E+00,      0.000,        0.000,       2.291
 CTF,   1,       0.0000000    ,       0.0000000    ,       0.0000000    ,       0.0000000
 CTF,   0,      0.43649727    ,      0.43649727    ,      0.43649727
```

Report Variable

As shown above in the report variable dictionary, there are many variables available for reporting.

```
Report Variable,
       \note each Report Variable command picks variables to be put onto the standard output file (.eso)
       \note some variables may not be reported for every simulation
  A1 , \field Key_Value
       \note use '*' (without quotes) to apply this variable to all keys
  A2 , \field Variable_Name
  A3 , \field Reporting_Frequency
       \type choice
       \key detailed
       \key timestep
       \key hourly
       \key daily
       \key monthly
       \key runperiod
  A4 ; \field Schedule_Name
```

Each Report Variable object causes a specific number assignment for outputs. For example, you could request separate reporting for the outside temperature:

```
report variable,*,outdoor dry bulb,timestep;
report variable,*,outdoor dry bulb,hourly;
report variable,*,outdoor dry bulb,monthly;
```

And the following would appear in the standard output file:

```
6,2,Environment,Outdoor Dry Bulb [C] !TimeStep
7,2,Environment,Outdoor Dry Bulb [C] !Hourly
8,2,Environment,Outdoor Dry Bulb [C] !Monthly [Value,Min,Day,Hour,Minute,Max,Day,Hour,Minute]
```

Item # 6 will be listed following the TimeStep timestamp for each timestep. Item #7 will be listed following an hourly timestamp. And item #8 will be listed following a monthly timestamp and has additional fields (because it is an "average" variable) that show the minimum and maximum values with identifying times for those minimum and maximum. An excerpt will illustrate:

```
     2,  1, 7,21, 0, 1, 0.00,15.00,Monday - timestep timestamp
6,17.08889
48,21.39851
49,0.0000000E+00
53,0.0000000E+00
60,21.87214
     2,  1, 7,21, 0, 1, 0.00,60.00,Monday - hourly timestamp
7,16.75555
     4,  1, 7 - monthly timestamp
8,22.77037,15.00000,21, 4,60,32.77778,21,14,60
```

To interpret, the first value (#6) is 17.09°C, #7 is 16.76°C (average for the hour), and #8 is 22.77°C, the average for the month with the low (minimum) of 15°C occurring on 7/21 4:60 (or 5:00) and the high (maximum) occurring on 7/21 14:60 (or 15:00).

Field: Key_Value

This alpha field can be used to make a specific reference for reporting. In addition to the generic variable names listed in the Report Variable Dictionary for the input file, variables will also have a key designator (such as Zone name or Surface name). You can reference the standard output file (**eplusout.eso**) to see just how these look.

```
41,2,ZN001:WALL004,Surface Inside Temperature[C]
42,2,ZN001:WALL004,Surface Outside Temperature[C]
43,2,ZN001:WALL004,Surface Int Convection Coeff[W/m2-K]
44,2,ZN001:WALL004,Surface Ext Convection Coeff[W/m2-K]
46,2,ZONE ONE,Mean Radiant Temperature[C]
47,2,ZONE ONE,Zone-Total Latent Gain[J]
```

```
51,2,ZONE ONE,Zone-Total Electric Consumption[J]
58,2,ZONE ONE,Zone/Sys Air Temp[C]
```

For example, in the previous block, the key for the surface variables is **ZN001:WALL004** whereas the key for the zone variables is **ZONE ONE** (note that the space is required and significant for this key).

You can have all keys listed in the standard output file by putting a "*" in this field or you can have specific items listed by putting in a key value.

Field: Variable_Name

This alpha field is the variable name (you don't have to put on the units) that is shown in the Report Variable Dictionary file.

Field: Reporting_Frequency

This field specifies how often the variable will be listed in the output file. "**Detailed**" will list the value each calculation step (i.e. Zone or HVAC). "**TimeStep**" will be the same as "detailed" for Zone valued variables and will be aggregated to the Zone timestep (i.e. TimeStep in Hour value) for HVAC variables. "**Hourly**" will aggregate the value to the hour. "**Daily**" will aggregate to the day (i.e. one value per day). "**Monthly**" will aggregate to the month (i.e. one value per month). "**RunPeriod**" will aggregate to the runperiod specified (each Design Day is a run period as is each runperiod object).

Field: Schedule_Name

The final field is a schedule name. This can be used to limit the number of lines that appear in your output file. For example, a schedule such as "ON PEAK" or "OFF PEAK" could provide a slice of values. Or, a seasonal schedule could be devised. The report variable will be active during any hour in which the schedule value is >0. For daily, monthly, and environment reporting frequencies, the aggregate value will be only for active schedule hours. Summed variables will report the sum for the active hours only. Averaged variables will report the average during the active hours only. If Schedule_Name is omitted, the report variable will be active for all hours.

Other IDF examples:

```
Report Variable, * , Mean Air Temperature, hourly;
Report Variable, * , Mean Radiant Temperature, timestep;
Report Variable, * , Zone/Sys Sensible Heating Energy, hourly;
Report Variable, * , Zone/Sys Sensible Cooling Energy, hourly;
Report Variable, * , Zone/Sys Air Temp, hourly;
```

Report Meter

Appropriate variables are grouped onto "meters" for reporting purposes. These values are put onto the eplusout.mtr file. This file has the same structure as the eplusout.eso file.

Field: Meter_Name

Meter names applicable for the simulation are shown on the Report Variable Dictionary file described earlier. A snipped from that file will illustrate:

```
Zone,Meter,Electricity:Facility [J]
Zone,Meter,Electricity:Building [J]
Zone,Meter,Electricity:Zone:RESISTIVE ZONE [J]
Zone,Meter,Electricity:Zone:EAST ZONE [J]
Zone,Meter,Electricity:Zone:NORTH ZONE [J]
Zone,Meter,GeneralLights:Electricity [J]
Zone,Meter,GeneralLights:Electricity:Zone:RESISTIVE ZONE [J]
Zone,Meter,GeneralLights:Electricity:Zone:EAST ZONE [J]
Zone,Meter,GeneralLights:Electricity:Zone:NORTH ZONE [J]
```

Meter names are of two forms: <FuelType>:<name> or <EndUseType>:<FuelType>:<name>. The user requests reporting by either specifying the full name above (without Units) or a "wildcard" represntation of that name (to obtain all meters of a type). For example, entering "Electricity:*" for the meter name will report on all the Electricity: meters (Electricity:Facility, Electricity:Building, Electricity:Zone:Resistive Zone, Electricity:Zone:East Zone, Electricity:North Zone in the example above). Both the fuel types and enduse types are set within the program by the developers. Current Fuel types are shown in the table below:

Table 14. Table of Metered Fuel Types

Energy/Fuel Type
Electricity
Gas
Coal
FuelOil#1
FuelOil#2
Propane
Water

The end use types are shown in the following table:

Table 15. End Use Category Types

End Use Types
GeneralLights
TaskLights
ExteriorLights
Heating
Cooling
DHW
Cogeneration
ExteriorEquipment
ZoneSource
PurchasedHotWater
PurchasedChilledWater

Specific meter types are then used for grouping the fuel type meters:

Table 16. Overall Meter Types

Meters
Facility
Building
Zone
System
Plant

Facility meters contain all the energy of a fuel type. Building meters contain the sum of each zone's energy. System meters contain the energy from the system components. Plant meters contain the energy from the plant equipments.

Thus, the following relationships should be observed:

$$Facility = \sum \left(Building + System + Plant + Exterior \right)$$

$$Building = \sum_{1}^{NumberOfZones} Zone$$

Further descriptions of Metering is contained in the "Getting Started" document.

Field: Reporting_Frequency

Similar to the report variables, meters can be reported at different frequencies. Their resolution is the Zone Time Step interval (Number of Time steps input). For this frequency, the elemental value of the meter will be reported. For more inclusive frequencies, the summed value along with the maximum and minimum values for the time interval will be reported.

The IDD definition for the Report Meter object is:

```
Report Meter,
  A1 , \field Meter_Name
       \note Form is EnergyUseType:..., e.g. Electricity:* for all Electricity meters
       \note or EndUse:..., e.g. GeneralLights:* for all General Lights
  A2 ; \field Reporting_Frequency
       \type choice
       \key timestep
       \key hourly
       \key daily
       \key monthly
       \key runperiod
```

An example of specifying in the IDF:

```
Report Meter,Electricity:*,Environment;
Report Meter,ExteriorEquipment*,Environment;
```

Report PollutionCalculation

The Pollution Calculation Report is an object that triggers the necessary Facility meters to be reported and the Pollutants resulting from these on and off-site energy consumptions are triggered and reported. These values are put onto the eplusout.mtr file. Facility meters contain all the energy of a fuel type. Thus, the following relationships should be observed:

$$Facility = \sum \left(Building + System + Plant + Exterior \right)$$

Information regarding how the coefficients are derived and applied can be found in the Engineering Document.

Users will input the pollution factors for each Fuel Type, most of which can be found in the PollutionCoefficients.idf Reference Data Set, and they are sets of 6 factors for each fuel type all with units of [kg/J]. For example Natural Gas:

Nat Gas CO2, Nat Gas SO2, Nat Gas Nox, Nat Gas CO, Nat Gas HydroCarbon, Nat Gas Particulate Matter.

This is the same for each Fuel Type: Natural Gas, Residual Oil, Distillate Oil, Coal, Off-Site Electricity, Gasoline, and Propane. For Purchased Heating and Cooling there are 2 fields that help in the conversion of heating energy to Natural Gas and cooling energy to Electricity. The energy is obtained internally from the following facility meters:

Electricity:Facility	Diesel:Facility
PurchasedCooling:Facility	PurchasedHeating:Facility
Gas:Facility	GASOLINE:Facility
COAL:Facility	FuelOil#1:Facility
FuelOil#2:Facility	Propane:Facility
ElectricityProduced:Facility	

For the pollutant calculation only the total off-site or purchased electric energy is calculated using the Electricity Factors. The Off-Site Electricity = Electricity:Facility - ElectricityProduced:Facility, the pollutants for the fuel type used by the generator will be calculated, for example Diesel, in these cases.

Field: Reporting_Frequency

Similar to the report variables and meters the pollution calculations can be reported at different frequencies. Their resolution is the Zone Time Step interval (Number of Time steps input). For this frequency, the elemental value of the Pollution Calculation will be reported. For more inclusive frequencies, the summed value along with the maximum and minimum values for the time interval will be reported.

FieldSet (CO2, SO2, Nox, CO, HydroCarbon, Particulate Matter)

For each fuel type, a set of the six referenced coefficients are required. These are detailed here and then the order of fuel types is shown.

Field: <Fuel Type> CO2

The Pollution coefficient for the fuel for conversion to the kilograms of Carbon Dioxide (CO_2), released in the atmosphere as pollution. The units are in kilograms per Joule.

Field: <Fuel Type> SO2

The Pollution coefficient for the fuel for conversion to the kilograms of Sulfur Dioxide (SO_2), released in the atmosphere as pollution. The units are in kilograms per Joule.

Field: <Fuel Type> NOx

The Pollution coefficient for the fuel for conversion to the kilograms of Nitrogen Oxides (NO_x), released in the atmosphere as pollution. The units are in kilograms per Joule.

Field: <Fuel Type> CO

The Pollution coefficient for the fuel for conversion to the kilograms of Carbon Monoxide (CO), released in the atmosphere as pollution. The units are in kilograms per Joule.

Field: <Fuel Type> HydroCarbon

The Pollution coefficient for the fuel for conversion to the kilograms of Hydrocarbons (HC), released in the atmosphere as pollution. The units are in kilograms per Joule.

Field: <Fuel Type> Particulate Matter

The Pollution coefficient for the fuel for conversion to the kilograms of Particulate Matter (PM), released in the atmosphere as pollution. The units are in kilograms per Joule.

Where the fuels are:

- Natural Gas

- Residual Oil
- Distillate Oil
- Coal
- Electricity
- Gasoline
- Propane

Field: Purchased Heating Efficiency

The Purchased Heating Efficiency is used to convert the purchased heating energy to Natural Gas for the pollution calculation. The efficiency is a number between 0 and 1 and divided into the purchased heating energy and the default is 0.3.

Field: Purchased Cooling COP

The Purchased Cooling COP is used to convert the purchased cooling energy to electricity for the pollution calculation. The Coefficient of Performance (COP) is a number greater than 0 and divided into the purchased cooling energy with a default of 3.0.

The IDD definition for the Report PollutionCalculation object is:

```
Report PollutionCalculation,
  A1 , \field Reporting_Frequency
       \type choice
       \key timestep
       \key hourly
       \key daily
       \key monthly
       \key runperiod
   \memo for each fuel -- 6 coefficients are entered
   \memo fuels are Nat Gas; Resid Oil; Distil Oil; Coal; Electricity; Gasoline
   \memo and coefficients are required for CO2; SO2; NOx' CO; HydroCarbon; Particulate Matter
  N1, \field Nat Gas CO2
      \units kg/J
  N2, \field Nat Gas SO2
      \units kg/J
  N3, \field Nat Gas NOx
      \units kg/J
  N4, \field Nat Gas CO
      \units kg/J
  N5, \field Nat Gas HydroCarbon
      \units kg/J
  N6, \field Nat Gas Particulate Matter
      \units kg/J
```

```
N7, \field Resid Oil CO2
    \units kg/J
N8, \field Resid Oil SO2
    \units kg/J
N9, \field Resid Oil NOx
    \units kg/J
N10,\field Resid Oil CO
    \units kg/J
N11,\field Resid Oil HydroCarbon
    \units kg/J
N12,\field Resid Oil Particulate Matter
    \units kg/J
N13,\field Distil Oil CO2
    \units kg/J
N14,\field Distil Oil SO2
    \units kg/J
N15,\field Distil Oil NOx
    \units kg/J
N16,\field Distil Oil CO
    \units kg/J
N17,\field Distil Oil HydroCarbon
    \units kg/J
N18,\field Distil Oil Particulate Matter
    \units kg/J
N19,\field Coal CO2
    \units kg/J
N20,\field Coal SO2
    \units kg/J
N21,\field Coal NOx
    \units kg/J
N22,\field Coal CO
    \units kg/J
N23,\field Coal HydroCarbon
    \units kg/J
N24,\field Coal Particulate Matter
    \units kg/J
N25,\field Electricity CO2
    \units kg/J
N26,\field Electricity SO2
    \units kg/J
N27,\field Electricity NOx
    \units kg/J
N28,\field Electricity CO
    \units kg/J
N29,\field Electricity HydroCarbon
    \units kg/J
N30,\field Electricity Particulate Matter
    \units kg/J
N31,\field Gasoline CO2
    \units kg/J
N32,\field Gasoline SO2
    \units kg/J
N33,\field Gasoline NOx
    \units kg/J
N34,\field Gasoline CO
    \units kg/J
N35,\field Gasoline HydroCarbon
    \units kg/J
N36,\field Gasoline Particulate Matter
    \units kg/J
N37,\field Propane CO2
    \units kg/J
N38,\field Propane SO2
    \units kg/J
N39,\field Propane SO2
    \units kg/J
N40,\field Propane SO2
    \units kg/J
N41,\field Propane SO2
    \units kg/J
```

```
  N42,\field Propane SO2
      \units kg/J
  N43,\field Purchased Heating Efficiency
      \note Purchased Heating Efficiency used when converted to Natural Gas
      \default 0.3
  N44;\field Purchased Cooling COP
      \note Purchased Cooling COP used when converted to Electricity
      \default 3.0
```

An example of specifying in the IDF:

```
  Report PollutionCalculation,
    monthly,
    4.9441097E-08,2.5150471E-13,5.8899394E-11,1.4617368E-11,2.4935510E-
13,1.2897677E-12, !Coeffs for Natural Gas
    7.3086839E-08,4.4998707E-10,1.5763971E-10,1.4329320E-11,3.6685294E-
12,3.7261390E-11, !Coeffs for Residual Oil
    7.3086839E-08,2.3766851E-10,6.0552446E-11,1.5138004E-11,1.7540841E-
13,6.0554596E-12, !Coeffs for DistOil
    8.5984516E-08,1.2658641E-09,2.5107479E-10,8.9664654E-11,1.7927772E-
12,1.2897677E-11, !Coeffs for Coal
    1.2241616E-07,2.8890798E-09,4.2562336E-10,1.7196903E-11,4.2992258E-
12,6.0189162E-11, !Coeffs for Elec in Illinois
    0.0,0.0,0.0,0.0,0.0,0.0, !Coeffs for Gasoline
    0.0,0.0,0.0,0.0,0.0,0.0, !Coeffs for Propane
    0.3,  ! Purchased Heating Efficiency
    3.0;  ! Purchased Cooling COP
```

And the following would appear in the standard meter output file:

```
378,1,Electricity:Facility [J] !Monthly [Value,Min,Day,Hour,Minute,Max,Day,Hour,Minute]
622,1,Diesel:Facility [J] !Monthly [Value,Min,Day,Hour,Minute,Max,Day,Hour,Minute]
766,1,Gas:Facility [J] !Monthly [Value,Min,Day,Hour,Minute,Max,Day,Hour,Minute]
721,1,ElectricityProduced:Facility [J] !Monthly [Value,Min,Day,Hour,Minute,Max,Day,Hour,Minute]
1107,1,CO2 Pollution [kg] !Monthly [Value,Min,Day,Hour,Minute,Max,Day,Hour,Minute]
1112,1,SO2 Pollution [kg] !Monthly [Value,Min,Day,Hour,Minute,Max,Day,Hour,Minute]
1117,1,NOx Pollution [kg] !Monthly [Value,Min,Day,Hour,Minute,Max,Day,Hour,Minute]
1122,1,CO Pollution [kg] !Monthly [Value,Min,Day,Hour,Minute,Max,Day,Hour,Minute]
1127,1,HydroCarbon Pollution [kg] !Monthly [Value,Min,Day,Hour,Minute,Max,Day,Hour,Minute]
1132,1,ParticulateMatter Pollution [kg] !Monthly [Value,Min,Day,Hour,Minute,Max,Day,Hour,Minute]
1137,1,TotalCarbonEquiv Pollution [kg] !Monthly [Value,Min,Day,Hour,Minute,Max,Day,Hour,Minute]
```

What shows up in the output are the Energy Meters that were utilized in this particular input file, the 6 pollutants, and the Total Carbon Equivalent. They show up in the meter output file in the following format and can be processed with a post processing program such as ReadVarsEso.exe to create a *.csv file.

```
  1,CHICAGO IL TMY2-94846 WMO#=725300,  41.78, -87.75,  -6.00, 190.00
  4,  31, 1
378,9.5340757E+10,738861.5, 1,18,01:10,1.4980187E+08,28,15,01:10
622,1.6052676E+11,0.0000000E+00, 1, 1,01:10,9.5892616E+07, 1,18,01:10
721,1.0043865E+11,1.8000000E+07, 1, 1,01:10,3.0000006E+07,21,18,01:10
766,2.1437527E+11,0.0000000E+00, 1,10,01:10,7.6836624E+07, 1, 8,01:10
1107,28913.67,3.798886, 1, 1,01:10,21.67417,28,15,01:10
1112,193.5651,1.9324769E-05, 1, 1,01:10,0.3689078,28,15,01:10
1117,45.23327,4.5256293E-03, 1, 1,01:10,5.6797009E-02,28,15,01:10
1122,6.488172,1.1231489E-03, 1, 1,01:10,3.5118437E-03,28,15,01:10
1127,0.3128079,1.6820368E-05, 1,10,01:10,5.3187570E-04,28,15,01:10
1132,4.485346,9.9101373E-05, 1, 1,01:10,7.7914479E-03,28,15,01:10
1137,11651.32,1.412970, 1, 1,01:10,10.63756,28,15,01:10
  4,  59, 2
378,8.4481188E+10,738861.5, 1,19,01:10,1.4466824E+08, 5,15,01:10
622,1.4499168E+11,0.0000000E+00, 1, 1,01:10,9.5892616E+07, 4,18,01:10
721,9.0719379E+10,1.8000000E+07, 1, 1,01:10,3.0000006E+07,12,18,01:10
766,1.9362821E+11,0.0000000E+00, 1,10,01:10,7.6836624E+07, 1, 8,01:10
```

```
1107,25977.31,3.798886, 1, 1,01:10,21.04573, 5,15,01:10
1112,171.5703,1.9324769E-05, 1, 1,01:10,0.3540764, 5,15,01:10
1117,40.37542,4.5256293E-03, 1, 1,01:10,5.4612014E-02, 5,15,01:10
1122,5.840893,1.1231489E-03, 1, 1,01:10,3.4235611E-03, 5,15,01:10
1127,0.2776805,1.6820368E-05, 1,10,01:10,5.0980505E-04, 5,15,01:10
1132,3.983269,9.9101373E-05, 1, 1,01:10,7.4824588E-03, 5,15,01:10
1137,10446.08,1.412970, 1, 1,01:10,10.28436, 5,15,01:10
```

You then need to process the **eplusout.mtr** into csv form to make it more readable. This is done automatically by the Run Eplus batch files or the EP-Launch program. Shown here after processing:

Date/Time	Electricity :Facility [J](Monthly)	Diesel:Facility [J](Monthly)	Gas:Facility [J](Monthly)	Electricity Produced: Facility [J](Monthly)	CO2 Pollution [kg](Monthly)	SO2 Pollution [kg](Monthly)	NOx Pollution [kg](Monthly)	CO Pollution [kg](Monthly)	HydroCarbon Pollution [kg](Monthly)	ParticulateMatter Pollution [kg](Monthly)	TotalCarbonEquiv Pollution [kg](Monthly)
January	9.46E+10	1.61E+11	2.14E+11	1E+11	29069.57	197.0005	45.74056	6.50881	0.317915	4.556772	11732.95
February	8.39E+10	1.45E+11	1.94E+11	9.07E+10	26086.25	174.1339	40.75393	5.856294	0.281491	4.036584	10506.96
November	8.82E+10	1.55E+11	2.07E+11	9.72E+10	27784.19	182.6693	43.08996	6.25137	0.29579	4.243604	11164.51
December	9.4E+10	1.61E+11	2.14E+11	1E+11	29007.96	195.783	45.56119	6.501563	0.316103	4.531406	11703.95

Figure 73. Pollution Report after Processing

Output

EnergyPlus produces several output files as shown in the section on "Running EnergyPlus". This section will discuss the data contained in the "standard" output files (**eplusout.eso, eplusout.mtr**). They, too, have data dictionaries but unlike the input files, the output data dictionary is contained within the output file. Thus, the basic structure of the standard output file is:

```
Data Dictionary Information
End of Data Dictionary
Data
…
Data
End of Data
```

As with the IDF structure, there are rules associated with the interpretation of the standard output data dictionary. These rules are summarized as follows:

- The first item on each line is an integer which represents the "report code". This "report code" will be listed in the data section where it will also be the first item on each line, identifying the data. Only 2 lines in the output file will not have an integer as the first item ("End of Data Dictionary" and "End of Data" lines).
- The second item on each line is also an integer. This integer corresponds to the number of items left on the dictionary line. Each string consists of a variable name and units in square brackets. Square brackets are required for all strings. If there are no units associated with a particular variable, then there are no characters between the brackets.

Six standard items appear at the start of every EnergyPlus Standard Output File Data Dictionary:

```
Program Version,EnergyPlus <version number indicated>
  1,5,Environment Title[],Latitude[degrees],Longitude[degrees],Time Zone[],Elevation[m]
  2,6,Day of Simulation[],Month[],Day of Month[],DST Indicator[1=yes 0=no],Hour[],StartMinute[],EndMinute[],DayType
  3,3,Cumulative Day of Simulation[],Month[],Day of Month[],DST Indicator[1=yes 0=no],DayType  ! When Daily Report
Variables Requested
  4,2,Cumulative Days of Simulation[],Month[]  ! When Monthly Report Variables Requested
  5,1,Cumulative Days of Simulation[] ! When Run Period Report Variables Requested
```

Item 0 is the program version statement.

Item 1 is produced at the beginning of each new "environment" (design day, run period).

Item 2 is produced prior to any variable reported at the timestep or hourly intervals. Hourly intervals will be shown with a start minute of 0.0 and an end minute of 60.0. Timestep intervals will show the appropriate start and end minutes.

Item 3 is produced prior to any variable reported at the daily interval.

Item 4 is produced prior to any variable reported at the monthly interval.

Item 5 is produced prior to any variable reported at the end of the "environment".

Following these five standard lines will be the variables requested for reporting from the input file (ref. Report Variable). For example:

```
6,2,Environment,Outdoor Dry Bulb [C] !Hourly
21,2,ZONE ONE,Mean Air Temperature[C] !Hourly
22,2,ZONE ONE,Zone-Total Latent Gain[J] !Hourly
26,2,ZONE ONE,Zone-Total Electric Consumption[J] !Hourly
```

This example illustrates the non-consecutive nature of the "report codes". Internally, EnergyPlus counts each variable that *could* be reported. This is the assigned "report code". However, the user may not request each possible variable for reporting. Note that, currently, the requested reporting frequency is shown as a comment (!) line in the standard output file.

The data is produced when the actual simulation is performed (after the warmup days). Data output is simpler in format than the data dictionary lines. From the dictionary above:

```
     1,DENVER COLORADO WINTER,  39.75,-104.87,  -7.00,1610.26
     2,  1, 1,21, 0, 1, 0.00,60.00,Monday
6,-17.22222
21,-17.22219
22,0.0000000E+00
26,0.0000000E+00
     2,  1, 1,21, 0, 2, 0.00,60.00,Monday
6,-17.22222
21,-17.22219
22,0.0000000E+00
26,0.0000000E+00
     2,  1, 1,21, 0, 3, 0.00,60.00,Monday
6,-17.22222
21,-17.22219
22,0.0000000E+00
26,0.0000000E+00
…
```

This output file can be easily turned into a form that is read into commonly used spreadsheet programs where it can be further analyzed, graphed, etc.

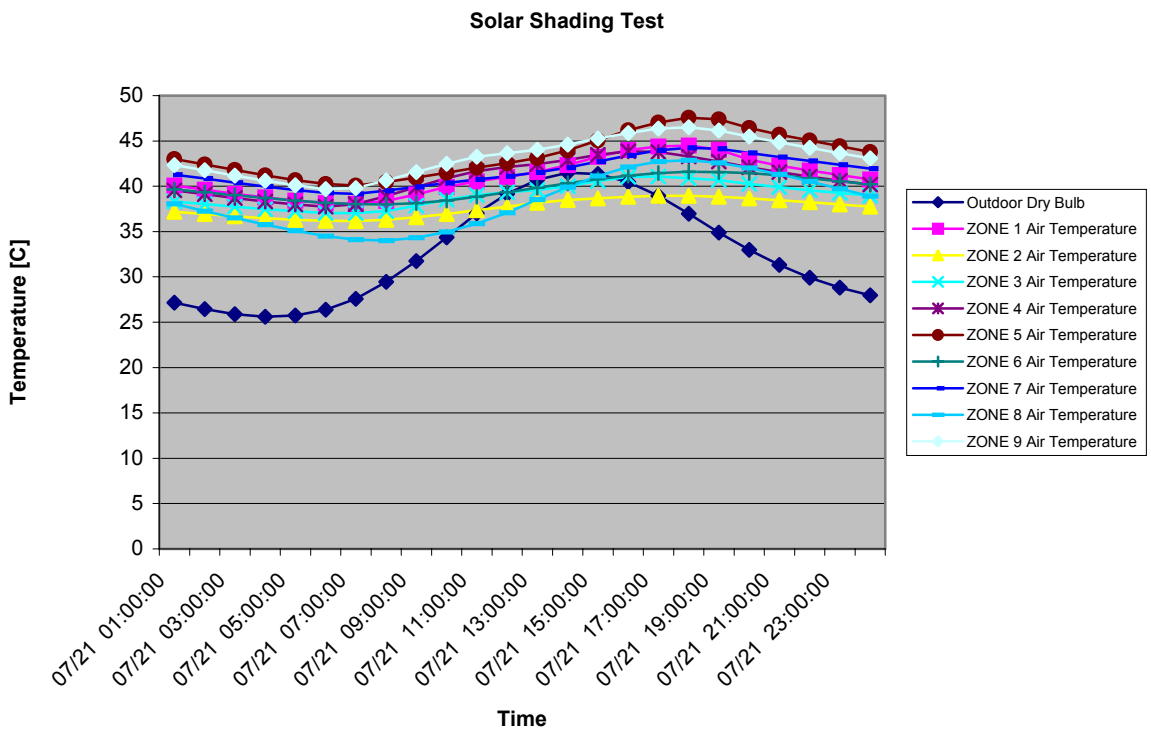

Figure 74. Example Chart from Standard Output File

Using "ReadVarsESO" (Creating Charts, etc. from Output Files)

The ReadVarsESO program is distributed with EnergyPlus as a simple approach to converting the standard output files (**eplusout.eso, eplusout.mtr**) into files that can be put directly into a spreadsheet program and then used to create graphs or do other statistical operations. ReadVarsESO can read the complex output files and sort the data into time-based form but it is not optimized – on a large file, it can take as long to process the output as it did to execute the simulation. There are ways to reduce this time, of course, such as

receiving only daily or monthly outputs rather than the more detailed timestep or hourly outputs. Or, you can schedule the details only for certain time periods, etc. Note that all the **Report Meter** objects are included on the **eplusout.eso** file as well as the **eplusout.mtr** file. If you wish to see only the metered outputs, the **eplusout.mtr** file will typically be a lot smaller (and therefore faster to process) than the **eplusout.eso** file.

The ReadVarsESO program has a very simple set of inputs. However, by default, you will put all the variables listed in the Report Variables (**eplusout.eso**) or Report Meter (**eplusout.mtr**) objects into the appropriate output files. The outputs from ReadVarsESO are limited to 254 variables (Microsoft Excel™ limit). You can tailor how many variables to list by specifying variables for the ReadVarsESO runs.

The program is run automatically from the **EP-Launch** program or the **RunEPlus** batch file (both these methods for executing EnergyPlus are described in the GettingStarted document). These programs use **<filename>.rvi** for input to the ReadVarsESO program executed first after the EnergyPlus execution and **<filename>.mvi** for the second execution. Ostensibly, the .rvi file would apply to the eplusout.eso file and the .mvi would apply to the eplusout.mtr file, BUT the contents of the files actually specify the “**input**” reporting file and the “**output**” reorganized file. Typical contents of an .rvi file are:

Table 17. "RVI" file contents

.rvi line description	Actual .rvi File Contents
Input File	eplusout.eso
Output File	eplusout.csv
Variable Name	Outdoor Dry Bulb
Variable Name	Zone/Sys Air Temp
Variable Name	Zone Air Humidity Ratio
Variable Name	Zone/Sys Sensible Cooling Rate
Variable Name	Zone/Sys Sensible Heating Rate
Variable Name	Zone-Total Latent Gain
Specific Variable Name	COOLING COIL AIR OUTLET NODE,System Node Temp
Specific Variable Name	AIR LOOP OUTLET NODE,System Node Temp
Specific Variable Name	AIR LOOP OUTLET NODE,System Node Humidity Ratio
Specific Variable Name	Mixed Air Node,System Node MassFlowRate
Specific Variable Name	Outside Air Inlet Node,System Node MassFlowRate
Variable Name	Humidifier Water Consumption Rate
Variable Name	Humidifier Electric Power
Variable Name	Zone Air Relative Humidity
Variable Name	Zone/Sys Moisture Load Rate Predicted
Termination Line	0

Note that the first two lines of the file are “input file” (where to read the report variable values from) and “output file” (where to put the reorganized data). ReadVarsESO takes the input stream but recognizes the date/time information and appropriately places the required data onto the “output file”. Following these lines are a list of variables to be culled from the “input file” and placed onto the output file. “Variable Name” will take all variables matching that

description whereas “Specific Variable Name” will only match the full description of the variable. So, in the above example, “Zone/Sys Air Temp” will report air temperatures for all the zones (but available at the HVAC time step if you choose the “detailed” reporting frequency in your input file) but “AIR LOOP OUTLET NODE” and “COOLING COIL AIR OUTLET NODE” will be the only values reported for the “System Node Temp” variable (the node temperature is available for all nodes used in the simulation). The termination line (0) is included to terminate the input to the ReadVarsESO program and begin the scanning.

The output from ReadVarsESO is in the form commonly called “comma de-limited”. This format can be read easily in spreadsheet programs, such as Excel™.

Note as described in the “Input for Output” above, only variables as listed on the **eplusout.rdd** file are available for reporting. If you request others, they will become “Warning” messages in the **eplusout.err** file.

```
** Warning ** The following Report Variables were requested but not generated
**   ~~~   ** because IDF did not contain these elements or misspelled variable name -- check .rdd file
************* Key=*, VarName=SYSTEM SENSIBLE COOLING RATE
```

The above message was generated from an IDF that requested reporting of the “SYSTEM SENSIBLE COOLING RATE” but that variable was not available from the components in the execution.

Weather Data

Weather data in EnergyPlus is a simple text-based format, similar to the input data and output data files. The weather data format includes basic location information in the first eight lines: location (name, state/province/region, country), data source, latitude, longitude, time zone, elevation, peak heating and cooling design conditions, holidays, daylight saving period, typical and extreme periods, two lines for comments, and period covered by the data. The data are also comma-separated and contain much of the same data in the TMY2 weather data set (NREL 1995). EnergyPlus does not require a full year or 8760 (or 8784) hours in its weather files. In fact, EnergyPlus allows and reads subsets of years and even sub-hourly (5 minute, 15 minute) data—the weather format includes a 'minutes' field. EnergyPlus comes with a utility that reads standard weather service file types such as TD1440 and DATSAV2 and newer 'typical year' weather files such as TMY2 and WYEC2. The utility program can use DOE-2 Formatted Weather Files (FMT) directly to process into the EnergyPlusWeather (EPW) format. Another utility program is available separately to read BLAST weather files (.wea extension). More details about weather data, weather source formats and the weather converter program are contained in the Auxiliary Programs document.

The "data dictionary" for EnergyPlus Weather Data is shown below. Note that semi-colons do NOT terminate lines in the EnergyPlus Weather Data.

Note that in the header records where "date" is used, the interpretation is similar to the earlier description (see Table 1. Date Field Interpretation). For clarity, the interpretations are listed here along with Weather file header applicability.

Table 18. Weather File Date Field Interpretation

Field Contents	Interpretation	Header Applicability
<number>	Julian Day of Year	All date fields
<number> / <number>	Month / Day	All date fields
<number> Month	Day and Month	All date fields
Month <number>	Day and Month	All date fields
<number> Weekday in Month	Numbered weekday of month	Holiday, DaylightSavingPeriod
Last Weekday In Month	Last weekday of month	Holiday, DaylightSavingPeriod

In the table, Month can be one of (January, February, March, April, May, June, July, August, September, October, November, December). Abbreviations of the first three characters are also valid.

In the table, Weekday can be one of (Sunday, Monday, Tuesday, Wednesday, Thursday, Friday, Saturday). Abbreviations of the first three characters are also valid.

```
!ESP(r)/EnergyPlus Weather Format
!April 2002
\memo  Dates in the EPW file can be several formats:
\memo  <number>/<number>  (month/day)
\memo  <number> Month
\memo  Month <number>
\memo <number>  (taken to be Julian day of year)
\memo Months are January, February, March, April, May,
\memo            June, July, August, September, October, November, December
\memo Months can be the first 3 letters of the month
```

```
LOCATION,
   A1, \field city
   \type alpha
   A2, \field State Province Region
   \type alpha
   A3, \field Country
   \type alpha
   A4, \field Source
   \type alpha
   N1, \field WMO
    \note usually a 6 digit field.  Used as alpha in EnergyPlus
    \type alpha
   N2 , \field Latitude
       \units deg
       \minimum -90.0
       \maximum +90.0
       \default 0.0
       \note + is North, - is South, degree minutes represented in decimal (i.e. 30 minutes is .5)
       \type real
   N3 , \field Longitude
       \units deg
       \minimum -180.0
       \maximum +180.0
       \default 0.0
       \note - is West, + is East, degree minutes represented in decimal (i.e. 30 minutes is .5)
       \type real
   N4 , \field TimeZone
       \units hr - not on standard units list???
       \minimum -12.0
       \maximum +12.0
       \default 0.0
       \note  Time relative to GMT.
       \type real
   N5 ; \field Elevation
       \units m
       \minimum -1000.0
       \maximum< +9999.9
       \default 0.0
       \type real
```

The Location header record duplicates the information required for the Location Object. When only a Run Period object is used (i.e. a weather file), then the Location Object Is not needed. When a Run Period and Design Day objects are entered, then the Location on the weather file (as described previously) is used and overrides any Location Object entry.

```
DESIGN CONDITIONS,
     N1, \field Number of Design Conditions
     A1, \field Design Condition Source
         \note current sources are ASHRAE HOF 2001 US Design Conditions, Canadian Design Conditions
         \note and World Design Conditions
     A2, \field Design Condition Type (HEATING)
       \note fields here will be dependent on the source, they are shown in a header/data format
       \note in both the .rpt and .csv files that are produced by the WeatherConverter program
     ...
     An, \field Design Condition Type (COOLING)
       \note same as note on Heating Design Conditions
```

The Design Conditions header record encapsulates matching (using WMO# -- World Meteorological Organization Station Number) design conditions for a weather file location. Currently only those design conditions contained in the ASHRAE Handbook of Fundamentals 2001 are contained in the weather files. These conditions can be used as desired. In addition, Design Day definition files have been created of all World, Canada, and United States Design Conditions. These files are available in the DataSet folder of the EnergyPlus installation.

```
TYPICAL/EXTREME PERIODS,
     N1, \field Number of Typical/Extreme Periods
     A1, \field Typical/Extreme Period 1 Name
     A2, \field Typical/Extreme Period 1 Type
     A3, \field Period 1 Start Day
     A4, \field Period 1 End Day
     \note repeat (A1-A3) until number of typical periods
 -- etc to # of periods entered
```

Using a heuristic method, the weather converter can determine typical and extreme weather periods for full year weather files. These will then be shown on the Typical/Extreme Periods header record. These are also reported in the statistical report output from the Weather Converter.

```
GROUND TEMPERATURES,
       N1, Number of Ground Temperature Depths
       N2, \field Ground Temperature Depth 1
         \units m
       N3, \field Depth 1 Soil Conductivity
         \units W/m-K,
       N4, \field Depth 1 Soil Density
         \units kg/m3
       N5, \field Depth 1 Soil Specific Heat
         \units J/kg-K,
       N6, \field Depth 1 January Average Ground Temperature
        \units C
       N7, \field Depth 1 February Average Ground Temperature
        \units C
       N8, \field Depth 1 March Average Ground Temperature
        \units C
       N9, \field Depth 1 April Average Ground Temperature
        \units C
       N10, \field Depth 1 May Average Ground Temperature
        \units C
       N11, \field Depth 1 June Average Ground Temperature
        \units C
       N12, \field Depth 1 July Average Ground Temperature
        \units C
       N13, \field Depth 1 August Average Ground Temperature
        \units C
       N14, \field Depth 1 September Average Ground Temperature
        \units C
       N15, \field Depth 1 October Average Ground Temperature
        \units C
       N16, \field Depth 1 November Average Ground Temperature
        \units C
       N17, \field Depth 1 December Average Ground Temperature
        \units C
      \note repeat above (N2-N17) to number of ground temp depths indicated
-- etc to # of depths entered
```

The weather converter program can use a full year weather data file to calculate "undisturbed" ground temperatures based on temperatures. Since an important part of soil heat transfer includes soil properties such as conductivity, density and specfic heat AND these cannot be calculated from simple weather observations, this header record is provided for user information. In addition, the ground temperatures used in EnergyPlus may be calculated via different methods – so no transfer of this header record data to EnergyPlus input currently exists.

```
HOLIDAYS/DAYLIGHT SAVING,
     A1, \field LeapYear Observed
      \type choice
      \key Yes
      \key No
      \note Yes if Leap Year will be observed for this file
      \note No if Leap Year days (29 Feb) should be ignored in this file
     A2, \field Daylight Saving Start Day
     A3, \field Daylight Saving End Day
     N1, \field Number of Holidays (essentially unlimited)
     A4, \field Holiday 1 Name
     A5, \field Holiday 1 Day
     \note repeat above two fields until Number of Holidays is reached
-- etc to # of Holidays entered
```

The Holidays / Daylight Saving header record details the start and end dates of Daylight Saving Time and other special days such as might be recorded for the weather file. These can be used by keying "Yes" for appropriate fields in the Run Period Object.

> Note: EnergyPlus processed weather files available on the EnergyPlus web site: http://www.energyplus.gov/weatherdata.html have neither special days specified nor daylight saving period.

For example, using a RunPeriod:

```
RunPeriod,      ! Annual simulation
           5,           1,  ! Start Month , Day
           5,          10,   ! End Month, Day
            ,    ! Will use day as shown on Weatherfile
           Yes,    ! Will use Holidays as embedded within the weather file
            No,    ! Will use Daylight Saving Time as embedded within the weather file
            No;    ! Apply Weekend Holiday Rule
```

Will use any holidays specified in the Holidays / Daylight Saving header record of the weather file but will not use the Daylight Saving Period that is specified there (if any). In addition, the user can specify Special Day Periods via the Special Day Period object and/or Daylight Saving Period via the Daylight Saving Period object to additionally specify these items.

```
COMMENTS 1, A1 \field Comments_1
COMMENTS 2, A1 \field Comments_2
```

The Comment header records may provide additional information about the weather data source or other information which may not fit in other header record formats.

```
DATA PERIODS,
     N1, \field Number of Data Periods
     N2, \field Number of Records per hour
     A1, \field Data Period 1 Name/Description
     A2, \field Data Period 1 Start Day of Week
       \type choice
       \key  Sunday
       \key  Monday
       \key  Tuesday
       \key  Wednesday
       \key  Thursday
       \key  Friday
       \key  Saturday
     A3, \field Data Period 1 Start Day
     A4, \field Data Period 1 End Day
     \note repeat above to number of data periods
-- etc to # of periods entered
```

A weather file may contain several "data periods" though this is not required (and, in fact, may be detrimental). In addition, a weather file may contain multiple records per hour BUT these must match the Number of Time Steps In Hour for the simulation. Multiple interval data files can be valued when you want to be sure of the weather values for each time step (rather than relying on "interpolated" weather data).

Note that a Run Period object may not cross Data Period boundary lines.

Missing Weather File Data

The following data contains "missing" descriptors, a new concept not introduced previously in our IDD conventions. In this case, it will be processed as though those values are "missing" in the weather conversions and/or EnergyPlus weather processing. This may not always be desirable though EnergyPlus will fill in "missing" value with something "appropriate". Eventually, these missing values will be available through the IDD and users will be able to supply their own values or EnergyPlus will calculate those values (such as radiation and illuminance) that are not a simple value replacement. Until then, the following are used:

Table 19. Missing weather replacement values

Data item	Supplied Value	Units
Dry Bulb Temperature	6	C
Dew Point Temperature	3	C
Relative Humidity	50	%
Atmospheric Pressure	Standard** Barometric Pressure (altitude based)	Pa
Wind Speed	2.5	m/s
Wind Direction	180	Deg
Total Sky Cover	5	(tenths)
Opaque Sky Cover	5	(tenths)
Visibility	777.7	Km
Ceiling Height	77777	m
Precipitable Water	0	Mm
Aerosol Optical Depth	0	Broadband turbidity
Snow Depth	0	Cm
Days Since Last Snow	88	Days
Radiation Values (Direct/Diffuse)	0.0	Wh/m2
Illuminance Values	0.0	lux (or CD/m2)

**Standard Barometric pressure based on location elevation is taken from ASHRAE 2001 Handbook of Fundamentals, Page 6.1 & 2.

Weather Data Records

For those interested in creating their own weather data or reading the .csv and .epw files that are produced by the Weather Converter program, the fields are shown in the following "IDD" description. Items shown in bold are used directly in the EnergyPlus program.

```
! Actual data does not have a descriptor
     N1, \field Year
     N2, \field Month
     N3, \field Day
     N4, \field Hour
     N5, \field Minute
     A1, \field Data Source and Uncertainty Flags
     \memo Initial day of weather file is checked by EnergyPlus for validity (as shown below)
     \memo Each field is checked for "missing" as shown below.  Reasonable values or the last
     \memo "good" value is substituted.
     N6, \field Dry Bulb Temperature
        \units C
        \minimum> -70
        \maximum< 70
     N7, \field Dew Point Temperature
        \units C
        \minimum> -70
        \maximum< 70
     N8, \field Relative Humidity
         \missing 999.
         \minimum 0
         \maximum 110
     N9, \field Atmospheric Station Pressure
        \units Pa
        \missing 999999.
        \minimum> 31000
        \maximum< 120000
     N10, \field Extraterrestrial Horizontal Radiation
        \units Wh/m2
        \missing 9999.
     N11, \field Extraterrestrial Direct Normal Radiation
        \units Wh/m2
        \missing 9999.
     N12, \field Horizontal Infrared Radiation Intensity
        \units Wh/m2
        \missing 9999.
     N13, \field Global Horizontal Radiation (used only for Photovoltaic objects)
        \units Wh/m2
        \missing 9999.
     N14, \field Direct Normal Radiation
        \units Wh/m2
        \missing 9999.
        \minimum 0
     N15, \field Diffuse Horizontal Radiation
        \units Wh/m2
        \missing 9999.
        \minimum 0
     N16, \field Global Horizontal Illuminance
        \units lux
        \missing 999999.
        \note will be missing if >= 999900
     N17, \field Direct Normal Illuminance
        \units lux
        \missing 999999.
        \note will be missing if >= 999900
     N18, \field Diffuse Horizontal Illuminance
        \units lux
        \missing 999999.
        \note will be missing if >= 999900
     N19, \field Zenith Luminance
        \units Cd/m2
        \missing 9999.
        \note will be missing if >= 9999
```

```
N20, \field Wind Direction
   \units degrees
   \missing 999.
   \minimum 0
   \maximum 360
N21, \field Wind Speed
   \units m/s
   \missing 999.
   \minimum 0
   \maximum 40
N22, \field Total Sky Cover (used if Horizontal IR Intensity missing)
   \missing 99
N23, \field Opaque Sky Cover (used if Horizontal IR Intensity missing)
   \missing 99
N24, \field Visibility
   \units km
   \missing 9999
N25, \field Ceiling Height
   \units m
   \missing 99999
N26, \field Present Weather Observation
N27, \field Present Weather Codes
N28, \field Precipitable Water
   \units mm
   \missing 999
N29, \field Aerosol Optical Depth
   \units thousandths
   \missing .999
N30, \field Snow Depth
   \units cm
   \missing 999
N31; \field Days Since Last Snowfall
   \missing 99
```

Weather Data Hourly Interpolation

Much of the existing weather data is produced in hourly format (refer to the discussion of data formats and weather conversion processing in the Auxiliary Programs Document). In order to match the hourly data in a continuous manner for EnergyPlus (where the time steps might be less than hourly), simple interpolation between "last hour's" values and "this hour's" values is performed; we will refer to this as "Last Hour Interpolation".

> Note that in versions prior to V1.0.3, the interpolation was done between "this hour" and "next hour". If required, we will refer to this as "Next Hour Interpolation".

Remember that hour 1 for EnergyPlus is the time interval 00:00:01AM to 1:00:00AM. Hour 2 is 1:00:01AM to 2:00:00AM (hh:mm:ss). With the interpolation scheme (Last Hour Interpolation) and reporting weather data values at timestep resolution, the "hour" values reported should match with the hourly weather data values. (Note that reporting "hourly" resolution will not do this unless your "TimeStep in Hour" is 1).

> Note that this interpolation applies to outdoor data only – schedule values are not interpolated in this manner.

The weighting scheme / interpolation is simply:

$$Value_{TimeStep} = LastHourValue \bullet Weight_{LastHour} + ThisHourValue \bullet Weight_{ThisHour}$$

where

$$Weight_{ThisHour} = \frac{CurrentTimeStep}{Number\ of\ TimeSteps\ in\ Hour}$$

$$Weight_{LastHour} = 1.0 - Weight_{ThisHour}$$

To explain further, the weighting for four (4) timesteps in hour is:

Table 20. Illustration of Data Interpolation for 15 minute timesteps

TimeStep	Time (mm:ss)	$Weight_{LastHour}$	$Weight_{ThisHour}$
1	00:01 to 15:00	.75	.25
2	15:01 to 30:00	.5	.5
3	30:01 to 45:00	.25	.75
4	45:01 to 60:00	0	1.0

And similarly for six (6) timesteps in hour:

Table 21. Illustration of Data Interpolation for 10 minute timesteps

TimeStep	Time (mm:ss)	$Weight_{LastHour}$	$Weight_{ThisHour}$
1	00:01 to 10:00	0.833333333333333	0.166666666666667
2	10:01 to 20:00	0.666666666666667	0.333333333333333
3	20:01 to 30:00	.5	.5
4	30:01 to 40:00	0.333333333333333	0.666666666666667
5	40:01 to 50:00	0.166666666666667	0.833333333333333
6	50:01 to 60:00	0	1.0

This interpolation gives a smooth, continuous look to the outdoor data. For day boundaries (i.e. from hour 24 to hour 1), the values from the previous day's last hour (23:00:01 to 24:00:00). For the a design day, this is the values for hour 24. For the first day of a weather simulation, it is likewise values for hour 24 of that day. For subsequent weather days, it will be the last hour of the previous day.

Weather File Data Reporting (errors) during Simulation

Missing data on the weather file used will be summarized on the **eplusout.err** file. In EnergyPlus, "missing data" is shown only for fields that EnergyPlus will use. Likewise out of range values (see specific fields in the previous definition) will be counted for each occurance and summarized. Note that the out of range values will not be changed by EnergyPlus and could affect your simulation results.

```
** Warning ** Missing Data Found on Weather Data File
************* Missing Atmospheric Pressure, Number of items=   48
************* Missing Dry Bulb Temperatures, Number of items=   4
** Warning ** Out of Range Data Found on Weather Data File
************* Out of Range Dry Bulb Temperature [>-70,<70], Number of items=   1
```

Running EnergyPlus

EnergyPlus is written in language conforming to Fortran Standard 90/95. It runs as a 32 bit console (non-Windows) application on Intel compatible computers (Windows NT, Windows 95/98). More explicit details on running EnergyPlus are available in a separate document (Running EnergyPlus in Getting Started). The following files are needed to run EnergyPlus:

```
EnergyPlus.exe (the executable file)
Energy+.ini (described below)
Energy+.idd (the input data dictionary file)
In.idf (the input file)
In.epw - optional (weather data file)
```

The input data dictionary and input data file have been discussed in the previous sections of this document.

For weather simulations, EnergyPlus accepts EnergyPlus weather files. Previous versions accepted BLAST formatted weather files and now a BLASTWeatherConverter program is available but not provided with the installation. The actual file name is **in.epw**.

Energy+.ini

The Energy+.ini file is read by the EnergyPlus.exe program and is *very important* to the simulation run. In specific, this file contains a pointer to where the Energy+.idd file will be found. In addition, it contains a pointer to the TRNSYS files (on a Wintel platform – for Photovoltaic usage). The Energy+.ini file is a "standard" Windows™ ini file and can be manipulated using the Windows API calls though EnergyPlus uses standard Fortran to manipulate it. It is a very simple ini file and an example is shown below:

```
[program]
dir=D:\EnergyPlus\
[trnsys]
dir=D:\EnergyPlus\trnsyspv\
```

The [program] section with the "dir" keyword gives EnergyPlus the directory where to find the Energy+.idd file. This path is used in the "Open" statement. If you leave it blank, EnergyPlus will expect to find it in the directory where the program is running. Energy+.ini, in.idf and in.epw (weather file runs) files should be in the directory from which you are running EnergyPlus.exe.

Likewise, the [trnsys] section specifies where the TRNSYS library file and other files to assist in running the Photovoltaic option are located. If the [trnsys] section is not included, then EnergyPlus expects the trnsyspv folder/directory to be in the next level from the current (run) folder.

More description of the Energy+.ini contents is contained in the Interface Developer's Guide.

For the advanced user, there is also the "EPMacro" program, described in "Appendix C. Input Macros". You run it as a separate program before EnergyPlus (the batch file included in the install and shown in the GettingStarted document contains the commands).

EnergyPlus may create several output files. Whether some files are produced depends on the actual simulation (for example, the .rdd file is only produced when you request a Variable Dictionary Report). Similarly, the .dxf file is only produced when a DXF surface report is requested. The current total list of possible EnergyPlus output files is:

Table 22. EnergyPlus Output Files

FileName	Description
Audit.out	Echo of input
Eplusout.err	Error file
Eplusout.eso	Standard Output File (contains results from both Report Variable and Report Meter objects).
Eplusout.eio	One time output file
Eplusout.rdd	Report Variable Data Dictionary
Eplusout.dxf	DXF (from Report,Surfaces,DXF;)
Eplusout.mtr	Similar to .eso but only has Report Meter outputs.
Eplusout.mtd	Meter details report – what variables are on what meters and vice versa.
Eplusout.end	A one line summary of success or failure (useful for Interface programs)
Eplusout.dbg	From Debug Output object – may be useful to support to help track down problems
Eplusout.csv	Not directly from EnergyPlus – produced by utility programs that read the .eso file and produce output files for spreadsheet programs
Eplusout.sln	Similar to DXF output but less “formatted”. Results of Report Surface, Lines object.
Eplusout.zsz	Results from the Zone Sizing object. This file is “spreadsheet” ready.
Eplusout.ssz	Results from the System Sizing object. This file is “spreadsheet” ready.
Eplusout.bnd	This file contains details about the nodes and branches. Useful in determining if all your nodes are connected correctly.
Eplusout.cif	This file is a by-product of using COMIS airflow. It contains the first commands sent during the EnergyPlus simulation and can be used with a stand-alone COMIS program.
Eplusout.trn	This file is a by-product of using the Photovoltaics-TRNSYS link. It contains the “listing” from executing TRNSYS. If multiple run periods are included in the EnergyPlus simulation, this file will contain results from multiple TRNSYS executions.

Errors

The **eplusout.err** file may contain three levels of errors (Warning, Severe, Fatal) as well as the possibility of just message lines. These errors may be duplicated in other files (such as the standard output file). These errors are described more completely in the Output Details and Examples document.

Table 23. EnergyPlus Errors

Error Level	Action
Warning	Take note
Severe	Should Fix
Fatal	Program will abort

EnergyPlus produces several messages as it is executing, as a guide to its progress. These message illustrate the sequence of execution as well as provides checkpoints should the simulation fail.

For example, the run of the 1ZoneUncontrolled input file from Appendix B produces:

```
EnergyPlus Starting
 EnergyPlus, Version 1.0.3
 Initializing New Environment Parameters
 Warming up
 Initializing Response Factors
 Initializing Window Optical Properties
 Initializing Solar Calculations
 Initializing HVAC
 Warming up
 Warming up
 Warming up
 Starting Simulation at 01/21 for DENVER COLORADO WINTER
 Initializing New Environment Parameters
 Warming up
 Warming up
 Warming up
 Starting Simulation at 07/21 for DENVER COLORADO SUMMER
 EnergyPlus Run Time=00hr 00min 01sec
ReadVarsESO program starting.
ReadVars Run Time=00hr 00min 00sec
ReadVarsESO program completed successfully.
ReadVarsESO program starting.
Requested ESO file=eplusout.mtr
does not exist.  ReadVarsESO program terminated.
ReadVarsESO program terminated.
```

In the example, the inclusion of the “ReadVars” program is also shown. It is run twice – once for the **eplusout.eso** file and once for the **eplusout.mtr** file.

Timing Studies

Extensive timing studies and fine-tuning of EnergyPlus is NOT complete. To give you an idea of comparable run times, we present the following (does not include HVAC) with an early version of EnergyPlus running on a 450MHZ machine. Remember, BLAST would be 1 calculation per hour, EnergyPlus (in this case) was 4 calculations per hour.

Table 24. Timing Comparisons (EnergyPlus vs. BLAST)

File	BLAST Per Zone	EnergyPlus Per Zone
GeometryTest (5 Zones, 2 Design Day, Full Weather Year)	13 sec	33 sec
SolarShadingTest (9 Zones, Full Weather Year)	7 sec	25 sec

Appendix A. Units and Abbreviations

Standard EnergyPlus Units

EnergyPlus expects information in a single unit system (SI). This requires interface developers to convert user inputs from those preferred by architects and engineers into the standard metric units of EnergyPlus. EnergyPlus will not perform any units conversions and will not have any unit conversion routines.

ASCII with no spaces is used for abbreviations. Note that exponents appear without any indication of exponentiation: i.e., kg/m3 not kg/m^3 or kg/m**3. Also note the use of dashes. We have W/m2-K not W/m2*K or W/(m2*K).

At the end we note the "problem" variables – the inputs that have non-standard units. Inputs using these units will have to be changed and the code checked to see how the quantities are used internally.

Table 25. Standard EnergyPlus Units

Quantity	unit	abbreviation
angular degrees	degree	deg
Length	meter	m
Area	square meter	m2
Volume	cubic meter	m3
Time	seconds	s
Frequency	Hertz	Hz
Temperature	Celsius	C
absolute temperature	Kelvin	K
temperature difference	Kelvin	delK
speed	meters per second	m/s
energy (or work)	Joules	J
power	Watts	W
mass	kilograms	kg
force	Newton	N
mass flow	kilograms per second	kg/s
volume flow	cubic meters per second	m3/s
pressure	Pascals	Pa
pressure difference	Pascals	delPa
specific enthalpy	Joules per kilogram	J/kg
density	kilograms per cubic meter	kg/m3
heat flux	watts per square meter	W/m2
specific heat	-------	J/kg-K
conductivity	-------	W/m-K
diffusivity	-------	m2/s
heat transfer coefficient	-------	W/m2-K

R-value	-------	m2-K/W
heating or cooling capacity	Watts	W
electric potential	volts	V
electric current	Amperes	A
illuminace	lux	lx
luminous flux	lumen	lm
luminous intensity	candelas	cd
luminance	candelas per square meter	cd/m2
vapor diffusivity	m2/s	
viscosity	-------	kg/m-s
porosity	-------	m3/m3
thermal gradient coeff for moisture capacity	-------	kg/kg-K
isothermal moisture capacity	-------	m3/kg

Appendix B. Simple IDF file

This very simple input file is used to illustrate the EnergyPlus input format. Note that, though valid, this model does not contain either a floor or a roof – only exterior walls.

```
! 1ZoneUncontrolled.idf
! Basic file description: Basic test for EnergyPlus
! Run:      2 design days.
! Building: Fictional 1 zone building with resistive walls.  No floor.  No Roof.
! Internal: None.
! System:   None.
! Plant:    None.
! SolDis=MinimalShadowing, Aniso, Detailed Interior and Exterior Convection

  Version,
    1.0.2;  !- Version Identifier

  TIMESTEP IN HOUR,
    4;  !- Time Step in Hour

  BUILDING,
    NONE,  !- Building Name
    0.0000000E+00,  !- North Axis {deg}
    Suburbs,  !- Terrain
    3.9999999E-02,  !- Loads Convergence Tolerance Value {W}
    4.0000002E-03,  !- Temperature Convergence Tolerance Value {C}
    MinimalShadowing;  !- Solar Distribution

  SKY RADIANCE DISTRIBUTION,
    1;  !- SkyRadianceValue

  SOLUTION ALGORITHM,
    CTF;  !- SolutionAlgo

  INSIDE CONVECTION ALGORITHM,
    Detailed;  !- InsideConvectionValue

  OUTSIDE CONVECTION ALGORITHM,
    Detailed;  !- OutsideConvectionValue

  Location,
    DENVER COLORADO,  !- LocationName
    39.750,  !- Latitude {deg}
    -104.870,  !- Longitude {deg}
    -7.0,  !- TimeZone {hr (decimal)}
    1610.26;  !- Elevation {m}

  DesignDay,
    DENVER COLORADO WINTER,  !- DesignDayName
    -17.22222,  !- Maximum Dry-Bulb Temperature {C}
    0.0000000E+00,  !- Daily Temperature Range {C}
    -17.22222,  !- Wet-Bulb Temperature At MaxTemp {C}
    83361.40,  !- Barometric Pressure {Pa}
    4.115816,  !- Wind Speed {m/s}
    169.0000,  !- Wind Direction {deg}
    0.0000000E+00,  !- Sky Clearness
    0,  !- Rain Indicator
    0,  !- Snow Indicator
    21,  !- Day Of Month
    1,  !- Month
    Monday,  !- Day Type
    0;  !- Daylight Saving Time Indicator
```

```
DesignDay,
  DENVER COLORADO SUMMER,  !- DesignDayName
  32.77778,  !- Maximum Dry-Bulb Temperature {C}
  17.77778,  !- Daily Temperature Range {C}
  15.00000,  !- Wet-Bulb Temperature At MaxTemp {C}
  84058.15,  !- Barometric Pressure {Pa}
  3.971544,  !- Wind Speed {m/s}
  146.0000,  !- Wind Direction {deg}
  1.100000,  !- Sky Clearness
  0,  !- Rain Indicator
  0,  !- Snow Indicator
  21,  !- Day Of Month
  7,  !- Month
  Monday,  !- Day Type
  0;  !- Daylight Saving Time Indicator

MATERIAL:Regular-R,
  R13LAYER,  !- Name
  Rough,  !- Roughness
  2.290965,  !- Thermal Resistance {m2-K/W}
  0.9000000,  !- Absorptance:Thermal
  0.7500000,  !- Absorptance:Solar
  0.7500000;  !- Absorptance:Visible

CONSTRUCTION,
  R13WALL,  !- Name
  R13LAYER;  !- Outside Layer

GroundTemperatures,
  18.89,  !- January Ground Temperature {C}
  18.92,  !- February Ground Temperature {C}
  19.02,  !- March Ground Temperature {C}
  19.12,  !- April Ground Temperature {C}
  19.21,  !- May Ground Temperature {C}
  19.23,  !- June Ground Temperature {C}
  19.07,  !- July Ground Temperature {C}
  19.32,  !- August Ground Temperature {C}
  19.09,  !- September Ground Temperature {C}
  19.21,  !- October Ground Temperature {C}
  19.13,  !- November Ground Temperature {C}
  18.96;  !- December Ground Temperature {C}

ZONE,
  ZONE ONE,  !- Zone Name
  0.0000000E+00,  !- Relative North (to building) {deg}
  0.0000000E+00,  !- X Origin {m}
  0.0000000E+00,  !- Y Origin {m}
  0.0000000E+00,  !- Z Origin {m}
  1,  !- Type
  1,  !- Multiplier
  -100.0000,  !- Ceiling Height {m}
  0.0000000E+00;  !- Volume {m3}

ScheduleType,
  Fraction,  !- ScheduleType Name
  0.0 : 1.0,  !- range
  CONTINUOUS;  !- Numeric Type

SurfaceGeometry,
  UpperLeftCorner,  !- SurfaceStartingPosition
  CounterClockWise,  !- VertexEntry
  WorldCoordinateSystem;  !- SurfaceGeometryKey

Surface:HeatTransfer,
  Zn001:Wall001,  !- User Supplied Surface Name
  Wall,  !- Surface Type
  R13WALL,  !- Construction Name of the Surface
  ZONE ONE,  !- InsideFaceEnvironment
  ExteriorEnvironment,  !- OutsideFaceEnvironment
  ,  !- OutsideFaceEnvironment Object
```

```
  SunExposed,  !- Sun Exposure
  WindExposed,  !- Wind Exposure
  0.5000000,  !- View Factor to Ground
  4,  !- Number of Surface Vertice Groups -- Number of (X,Y,Z) group
  0.0000000E+00,0.0000000E+00,4.572000,  !- X,Y,Z ==> Vertex 1
  0.0000000E+00,0.0000000E+00,0.0000000E+00,  !- X,Y,Z ==> Vertex 2
  15.24000,0.0000000E+00,0.0000000E+00,  !- X,Y,Z ==> Vertex 3
  15.24000,0.0000000E+00,4.572000;  !- X,Y,Z ==> Vertex 4

Surface:HeatTransfer,
  Zn001:Wall002,  !- User Supplied Surface Name
  Wall,  !- Surface Type
  R13WALL,  !- Construction Name of the Surface
  ZONE ONE,  !- InsideFaceEnvironment
  ExteriorEnvironment,  !- OutsideFaceEnvironment
  ,  !- OutsideFaceEnvironment Object
  SunExposed,  !- Sun Exposure
  WindExposed,  !- Wind Exposure
  0.5000000,  !- View Factor to Ground
  4,  !- Number of Surface Vertice Groups -- Number of (X,Y,Z) group
  15.24000,0.0000000E+00,4.572000,  !- X,Y,Z ==> Vertex 1
  15.24000,0.0000000E+00,0.0000000E+00,  !- X,Y,Z ==> Vertex 2
  15.24000,15.24000,0.0000000E+00,  !- X,Y,Z ==> Vertex 3
  15.24000,15.24000,4.572000;  !- X,Y,Z ==> Vertex 4

Surface:HeatTransfer,
  Zn001:Wall003,  !- User Supplied Surface Name
  Wall,  !- Surface Type
  R13WALL,  !- Construction Name of the Surface
  ZONE ONE,  !- InsideFaceEnvironment
  ExteriorEnvironment,  !- OutsideFaceEnvironment
  ,  !- OutsideFaceEnvironment Object
  SunExposed,  !- Sun Exposure
  WindExposed,  !- Wind Exposure
  0.5000000,  !- View Factor to Ground
  4,  !- Number of Surface Vertice Groups -- Number of (X,Y,Z) group
  15.24000,15.24000,4.572000,  !- X,Y,Z ==> Vertex 1
  15.24000,15.24000,0.0000000E+00,  !- X,Y,Z ==> Vertex 2
  0.0000000E+00,15.24000,0.0000000E+00,  !- X,Y,Z ==> Vertex 3
  0.0000000E+00,15.24000,4.572000;  !- X,Y,Z ==> Vertex 4

Surface:HeatTransfer,
  Zn001:Wall004,  !- User Supplied Surface Name
  Wall,  !- Surface Type
  R13WALL,  !- Construction Name of the Surface
  ZONE ONE,  !- InsideFaceEnvironment
  ExteriorEnvironment,  !- OutsideFaceEnvironment
  ,  !- OutsideFaceEnvironment Object
  SunExposed,  !- Sun Exposure
  WindExposed,  !- Wind Exposure
  0.5000000,  !- View Factor to Ground
  4,  !- Number of Surface Vertice Groups -- Number of (X,Y,Z) group
  0.0000000E+00,15.24000,4.572000,  !- X,Y,Z ==> Vertex 1
  0.0000000E+00,15.24000,0.0000000E+00,  !- X,Y,Z ==> Vertex 2
  0.0000000E+00,0.0000000E+00,0.0000000E+00,  !- X,Y,Z ==> Vertex 3
  0.0000000E+00,0.0000000E+00,4.572000;  !- X,Y,Z ==> Vertex 4

report variable,
  *,  !- Key_Value
  outdoor dry bulb,  !- Variable_Name
  hourly;  !- Reporting_Frequency

report variable,
  *,  !- Key_Value
  mean air temperature,  !- Variable_Name
  hourly;  !- Reporting_Frequency

report variable,
  *,  !- Key_Value
  Zone-Total Latent Gain,  !- Variable_Name
  hourly;  !- Reporting_Frequency
```

```
report variable,
  *,  !- Key_Value
  Zone-Total Electric Consumption,  !- Variable_Name
  hourly;  !- Reporting_Frequency

report variable,
  *,  !- Key_Value
  mean radiant temperature,  !- Variable_Name
  hourly;  !- Reporting_Frequency

Report variable,
  *,  !- Key_Value
  Surface Inside Temperature,  !- Variable_Name
  daily;  !- Reporting_Frequency

Report variable,
  *,  !- Key_Value
  Surface Outside Temperature,  !- Variable_Name
  daily;  !- Reporting_Frequency

Report variable,
  *,  !- Key_Value
  Surface Int Convection Coeff,  !- Variable_Name
  daily;  !- Reporting_Frequency

Report variable,
  *,  !- Key_Value
  Surface Ext Convection Coeff,  !- Variable_Name
  daily;  !- Reporting_Frequency

report,
  variable dictionary;  !- Type_of_Report

report,
  surfaces,  !- Type_of_Report
  dxf;  !- Name_of_Report

report,
  construction;  !- Type_of_Report
```

Appendix C. Input Macros

Introduction

The Input Macros feature increases the flexibility of the EnergyPlus input files. This feature is intended for advanced users who are already familiar with EnergyPlus IDF files and need to prepare input manually. The basic capabilities are:

- Incorporating external files containing pieces of IDF into the main EnergyPlus input stream.
- Selectively accepting or skipping portions of the input.
- Defining a block of input with parameters and later referencing this block.
- Performing arithmetic and logical operations on the input.
- Input macro debugging and listing control.

These capabilities are invoked in the EP-MACRO program by using macro commands. Macro commands are preceded by ## to distinguish them from regular EnergyPlus input commands. After execution by the EP-MACRO processor, macro commands produce regular lines of EnergyPlus input that are shown in the resultant IDF file (**out.idf**) and, subsequently, in the EnergyPlus echo print (**audit.out**). Following are descriptions of the macro commands associated with the above capabilities. A detailed example of input macros is given at the end of this section; you should review it before reading the macro command descriptions.

Incorporating External Files

##include {includefilename}

This command puts all of the lines in an external file into the EnergyPlus input stream starting right after the command line. The name of the file that is included is the concatenation of {prefixpathname}, entered using **##fileprefix** , and {includefilename}. The lines in the external file will be listed in the resultant IDF file. When all the lines in the external file have been read in, input reverts back to the original input file at the line following the **##include** command.

##fileprefix {prefixpathname}

specifies a pathname that will be prefixed to the filename given in an **##include** command. The **##fileprefix** command allows commonly-used include files to be kept in a directory other than the directory in which the current input file resides.

Example: on a PC, the combination

##fileprefix C:\EnergyPlus\Library

##include SCHEDULES.IDF

will include into the EnergyPlus input stream the file whose full name is

C:\EnergyPlus\Library\SCHEDULES.IDF

##includesilent {includefilename}

This command is identical to **##include**, except that the lines in the included file will not be listed in the EP-MACRO echo.

##nosilent

Overrides the listing suppression of **##includesilent**. Used for debugging purposes only. After **##nosilent** , all following **##includesilent** commands are treated as **##include** commands.

Example: Assume the following files contain the indicated lines:

Main input file: **input1.inp**	**External file:** **file2.inp**
line 1a	line 2a
##include file2.inp	line 2b
line 1b	line 2c
line 1c	

The end result of processing **##include** input1.inp will be:

line 1a (from input1.inp)
line 2a (from file2.inp)
line 2b (from file2.inp)
line 2c (from file2.inp)
line 1b (from input1.inp)
line 1c (from input1.inp)

External files can also contain **##include** commands, as shown in the following example:

Main input file: **input1.inp**	**First external file:** **file2.inp**	**Second external file:** **file3.inp**
line 1a	line 2a	line 3a
##include file2.inp	line 2b	line 3b
line 1b	**##include** file3.inp	line 3c
line 1c	line 2c	line 3d

The end result of processing **##include** input1.tmp will be:

line 1a (from input1.inp)
line 2a (from file2.inp)
line 2b (from file2.inp)
line 3a (from file3.inp)
line 3b (from file3.inp)
line 3c (from file3.inp)
line 3d (from file3.inp)
line 2c (from file2.inp)
line 1b (from input1.inp)
line 1c (from input1.inp)

Note: Up to nine **##include** commands can be nested. However, there should be no recursion. This is an example of a recursion:

file1.inp contains **##include** file2.inp

file2.inp contains **##include** file1.inp

Selectively Accepting or Skipping Lines of Input

The **##if** series of commands is used to selectively accept or skip lines of input according to the following sequence:

```
##if  {condition1}
  line1a
  line1b
```

```
….

##elseif  {condition2}
  line2a
  line2b
▯

##elseif  {condition3}
  line3a
  line3b
….

##else
  line N a
  line N b
….

##endif
```

Then the lines that will be included into the EnergyPlus input stream are:

```
If {condition 1} is TRUE,
  line1a
  line1b
….
otherwise

If {condition 2} is TRUE,
  line2a
  line2b
….
otherwise

If {condition 3} is TRUE,
  line3a
  line3b
….

otherwise

If {condition 1}, {condition 2}, {condition 3} are all FALSE.
  line N a
  line N b
….
```

There are six different **##if...** commands:

Command		Result
##ifdef	{macro name}	: if macro name defined, include following lines
##ifndef	{macro name}	: if macro name NOT defined, include following lines
##if	{condition}	: if condition is TRUE, include following lines
##elseif	{condition}	: if condition is TRUE, and previous conditions are FALSE, include following lines
##else		: if all previous conditions are FALSE, include following lines
##endif		: indicates the end of the if block

Notes:

{macro name} is explained in section *Defining Blocks of Input*, below.

{condition} is 0 or BLANK meaning FALSE, and any other character meaning TRUE.
##ifdef and **##ifndef** do not have corresponding **##elseif** commands, but they do have corresponding **##else** and **##endif** commands.

Defining Blocks of Input

The **##def** command allows a block of input text to be defined and given a name. The block of text can then be inserted anywhere in the EnergyPlus input stream by simply referencing the name of the block. (This process is called macro expansion.) The block can have parameters (also called arguments) that can be given different values each time the block is referenced.

The syntax of the **##def** command is as follows:

```
        unique name
           |         zero or more arguments    __ macro text
           |            |                      |
           |            |                      |
           |            |                      |
    ##def  macro-name [ arg1 arg2,arg3 ...]   text line 1
  |      |           | |    |    |    |     |
  |_     |           | |    |_   |   _|     |
    |    |           | |      |  |  |       |__ one
    |    |           | |      |  |  |           or
zero    one       zero_|     space(s)           more
or      or        or         or comma           spaces
more    more      more
spaces  spaces    spaces
```

Example: Define a schedule macro with name "All_Const":

```
##def All_Const[x]
        Fraction, WeekON, 1,1, 12,31;
    WEEKSCHEDULE, WeekON,
        DayON,DayON,DayON,
        DayON,DayON,DayON,
        DayON,DayON,DayON,
        DayON,DayON,DayON;
    DAYSCHEDULE, DayON, Fraction,
        x,x,x,x,x,x,x,x,x,x,x,x,
        x,x,x,x,x,x,x,x,x,x,x,x ;
##enddef
```

Then, in the EnergyPlus input stream (file in.imf), when we write :

```
SCHEDULE, Constant At 0.8, All_Const[0.8]
```

the result (file out.idf) is equivalent to:

```
SCHEDULE, Constant At 0.8,
        Fraction, WeekON, 1,1, 12,31;
    WEEKSCHEDULE, WeekON,
        DayON,DayON,DayON,
        DayON,DayON,DayON,
        DayON,DayON,DayON,
        DayON,DayON,DayON;
    DAYSCHEDULE, DayON, Fraction,
        0.8,0.8,0.8,0.8,0.8,0.8,0.8,0.8,0.8,0.8,0.8,0.8,
        0.8,0.8,0.8,0.8,0.8,0.8,0.8,0.8,0.8,0.8,0.8,0.8 ;
```

Macro definitions may have one or more arguments; the maximum number of arguments is 32. When a macro with arguments is referenced, its arguments must be given values. When a macro has no arguments, the brackets are still required both for macro definition and

reference. Cautionary note: [ ] have been used in some versions of EnergyPlus inputs as comment/units fields. These will be expanded if left in the IDF and sent to EPMacro.

Macro names must be unique (except see **##set1** below); i.e., when a macro name is defined it cannot be defined again. Macro names are limited to 40 characters.

To summarize, commands you use to define macros are the following:

##def macro-name [**arg1**,..,**arg*n***] macro-text

Defines a macro with the name macro-name and arguments "arg1" through "arg*n*". "Macro-text" is one or more lines of text. If there are no arguments, the syntax is **##def** macro-name macro-text.

##enddef

Indicates the end of the macro definition initiated by **##def.**

##def1 macro-name [**arg1**,..,**arg*n***] macro-text

This is the same as **##def** but there is only one line of text so that the terminating command **##enddef** is not required.

##set1 macro-name macro-text

Like **##def1** but has no arguments and macro-text is evaluated before storing. "Macro-text is evaluated" means that if macro-text contains other macros, these macros will be expanded, and the expanded text becomes the macro-text defined by **##set1**.

Example:

```
                    ##def1   xx  123
                    ##set1   yy  xx[]

is equivalent to:   ##set1   yy  123

##set1  can also be used to redefine macro-name.

##set1   x   0
  .
  .
  .
##set1   x    #eval[ x[]+1 ]

(see Arithmetic Operations for description of the #eval macro.)
```

Arithmetic Operations

The built-in macro called **#eval[ ]** can be used to perform arithmetic, literal, and logical operations. It can be abbreviated to **# [ ].**

#eval[X OP Y] or #[X OP Y]

gives the result X OP Y. The allowed values for X, OP, and Y, and the corresponding result, are shown in the following table.

X *	OP **	Y	Result
number	+ (plus)	number	number
number	- (minus)	number	number
number	* (times)	number	number
number	/ (divided by)	number	number
number	min	number	number
number	max	number	number

number	mod	number	number
number	** (power)	number	number
SIN	OF	number (degrees)	number
COS	OF	number (degrees)	number
TAN	OF	number (degrees)	number
SQRT	OF	number	number
ABS	OF	number	number
ASIN	OF	number	number (degrees)
ACOS	OF	number	number (degrees)
ATAN	OF	number	number
INT	OF	number	number
LOG10	OF	number	number
LOG	OF	number	number
literal1	// (concatenate)	literal2	literal "literal1literal2"
literal1	/// (concatenate)	literal2	literal "literal1 literal2"
literal	EQS (=)	literal	logical (true or false)
literal	NES (≠)	literal	logical (true or false)
logical	AND	logical	logical (true or false)
logical	OR	logical	logical (true or false)
	NOT	logical	logical (true or false)
number	EQ (=)	number	logical (true or false)
number	NE (≠)	number	logical (true or false)
number	GT (>)	number	logical (true or false)
number	GE (≥)	number	logical (true or false)
number	LT (<)	number	logical (true or false)
number	LE (≤)	number	logical (true or false)
* Upper or lower case is allowed for SIN, COS, etc.			
** Upper or lower case is allowed for OF, EQS, etc.			

Example

#eval[1 + 2 **]** when expanded becomes 3.

#eval[1 + **#eval**[2 * 3] **]** when expanded becomes 7.

Example

##set1 city[] Washington

DesignDay, #[city[ ] /// SUMMER], ! Design Day Name

gives

DesignDay, "Washington SUMMER", ! Design Day Name

The following example illustrates the use of **#eval** inside **#if** commands:

##if #[city[ ] EQS Chicago **]**

##if #[#[city[ ] EQS Chicago] and **#[** occup[ ] NES low **]]**

Notes:

1. For logical values:

False = 0 or BLANK,

True = any other character

2. A literal must be enclosed inside a pair of double quotes if it contains BLANKs or reserved characters like [ ] ( ) ,

E.g., "abc *def"

Otherwise, the quotes around the literals are optional.

3. Literal concatenation operators // and /// produce quoted literals.

E.g., # [large /// office] gives "large office"

4. Literals are case sensitive. For example, "Chicago", "CHICAGO" and "chicago" are distinct.

5. Literals are limited to 40 characters.

Macro Debugging and Listing Control

##list

Turn on listing; echo of input lines on the OUTPUT file is enabled. This is the default condition.

##nolist

Turn off listing; echo of input lines on the output file is disabled.

##show

Start printing expanded line on output file. After this command, if a macro expansion was done, the expanded line is printed on the output file. In this way you can see the end result of macro expansions, which is the input as seen by the EnergyPlus Input processor.

##noshow

Stop printing expanded line on output file. This is the default condition.

##showdetail

Start printing each macro expansion. After this command, every time a macro expansion is done the result of the expansion is printed. This can produce lots of output.

##noshowdetail

Stop printing each macro expansion. This is the default condition.

##traceback

Give full traceback when printing an error message. After this command, if there is a EP-MACRO error, a full traceback of the macro expansions in progress is printed. This is the default condition.

##notraceback

Don't give full traceback when printing an error message.

##write

Start writing expanded text into file 22. This is similar to **##show** except that the expanded lines are written into file 22. Therefore, file 22 will contain only the text that will be seen by the EnergyPlus processor. This file is used only for debugging purposes. It allows you to see what the macro-processed input file looks like.

##nowrite

Stop writing expanded text into file 22. This is the default condition.

##symboltable

Prints table of current macro names. All of the macro names that are defined will be printed.

##clear

Clear all macro definitions. All the macro names defined up to this point will be deleted.

##reserve TEXT *k* NAMES *l* STACK *m*

Allocates memory.

Reserves *k* words of space in AA array for macro definition storage.

Reserves *l* positions in macro definition names table.

Reserves *m* words of stack space.

If used, the **##reserve** command must precede all other macro commands in the EP-MACRO input. This command should be used only if one or more of the following error messages is received:

"Need more memory for storing macro definitions"

Use "**##reserve** TEXT nnnnnn" command to get more memory. Current value of *nnnnnn* is: _ _ _

"Macro table capacity exceeded"

Use "**##reserve** NAMES nnnnnn" command to get more memory. Current value of *nnnnnn* is: _ _ _

"Macro stack overflow"

Use "**##reserve** STACK nnnnnn" command to get more memory. Current value of *nnnnnn* is: _ _ _

##$ <comment>

Allows you to enter comment lines inside a macro. **<comment>** is printed in the EP-MACRO echo but is not acted on by the macro processor.

Example:

This example shows the use of the **##set**, **##include**, **##eval** and **##if** commands. Let an external file called cities.idf contain the following text:

```
 ##if #[ city[ ] EQS CHICAGO ]
  Location,Chicago IL,  !- Location Name
   41.880,  !- Latitude
   -87.63,  !- Longitude
   -6.0,    !- Time Zone
   2.;      !- Elevation {m}
##elseif #[ city[ ] EQS WASHINGTON ]
  Location,Washington DC,  !- Location Name
   38.9,   !- Latitude
   -77.0,  !- Longitude
   -5.0,   !- Time Zone
   15.;    !- Elevation {m}
##else
  ERROR --- City Undefined
##endif
```

Then the EnergyPlus input

```
##set1 city[ ] CHICAGO
##include cities.idf
```

will be converted, after macro processing, to:

```
Location,Chicago IL,  !- Location Name
   41.880,  !- Latitude
   -87.63,  !- Longitude
   -6.0,    !- Time Zone
   2.;      !- Elevation {m}
```

Listing Format

The format of listing from EP-MACRO gives information about the status of the input macros, as shown in the following:

```
 1. 1.1  * 123 * ......  EnergyPlus input line
 -  - -  ------- ----------------------------------
 |  | |     |     |
 |  | |     |     echo of EnergyPlus input line
 |  | |     |
 |  | |    line number ( if the current line is being skipped
 |  | |                  by " ##if... " etc, this is indicated
 |  | |                  by printing "- 123 -" instead of
 |  | |                  "* 123 *" in the line number field;
 |  | |                  if the current line is part of a
 |  | |                  macro command, it is indicated by
 |  | |                  printing "# 123 #" )
 |  | |
 |  | macro expansion nesting level
 |  |
 |"##if" nesting level
 |
 "##include" nesting level
```

Appendix D. Acknowledgments

Copyright Notice

Copyright © 1996-2002 The Board of Trustees of the University of Illinois and The Regents of the University of California through Ernest Orlando Lawrence Berkeley National Laboratory. All rights reserved.

Portions of the EnergyPlus™ software package have been developed and copyrighted by other individuals, companies and institutions. These portions have been incorporated into the EnergyPlus software package under license.

In addition to the primary authorship of the LBNL Simulation Research Group (http://simulationresearch.lbl.gov/) and the UIUC Building Systems Laboratory (http://www.bso.uiuc.edu/), the following have contributed to EnergyPlus V1.0:

Portions of the EnergyPlus weather processor were developed by Office of Building Technology, State and Community Programs, Energy Efficiency and Renewable Energy, US Department of Energy, www.eren.doe.gov/buildings

Portions of the input processing, output processing, weather processor, BLAST Translator were developed by US Army Corps of Engineers, Construction Engineering Research Laboratories, 2902 Newmark Drive, Champaign IL 61821. www.cecer.army.mil

Portions of the EnergyPlus utility software (e.g. EP-Launch, IDFEditor, DOE2Translator, System Templates) were developed by GARD Analytics, Inc. 1028 Busse Highway, Park Ridge, Illinois 60068-1802, USA (847) 698-5690, www.gard.com. GARD performed independent verification and validation testing of the software after developing the testing strategy and plan. GARD analytics was also responsible for Gas absorption chiller and desiccant dehumidifier models.

Portions of flow resolver, chiller models (absorption, electric, const cop, engine-driven, gas-turbine), generator models (diesel electric, gas turbine), furnace models, heat recovery loop, plant loop, plant condenser loop, air-change dependent inside film coefficients were developed by Oklahoma State University, Stillwater, OK 74078.

Portions of EMPD moisture calculation model, DX Coil models, Air-cooled condenser model, furnace models, cooling tower model, unitary system models and air-to-air heat pump were developed by University of Central Florida, Florida Solar Energy Center (FSEC), 1679 Clearlake Road, Cocoa, FL 32922, www.fsec.ucf.edu

EnergyPlus includes COMIS (Conjunction Of Multizone Infiltration Specialists) developed by a multinational, multi-institutional effort under the auspices of the International Energy Agency's Buildings and Community Systems Agreement working group focusing on multizone air flow modeling

(Annex 23) and now administered by the Swiss Federal Laboratories for Materials Testing and Research (EMPA), Division 175, Überlandstrasse 129, CH-8600 Dübendorf, Switzerland.

EnergyPlus v1.0.1,v1.0.2,v1.0.3 (Wintel platform) includes a link to TRNSYS (The Transient Energy System Simulation Tool) for Photovoltaics calculations developed by Thermal Energy System Specialists, 2916 Marketplace Drive, Suite 104, Madison, WI 53719; Tel: (608) 274-2577

Portions of this software package that convert certain stand-alone heat transfer models for slab-on-grade and basement foundations were developed by William Bahnfleth, Cynthia Cogil, and Edward Clements, Department of Architectural Engineering, Pennsylvania State University, 224 Engineering Unit A, University Park, Pennsylvania 16802-1416, (814) 863-2076.

The concept and initial implementation for the EnergyPlus COM/DLL version (Wintel platform) was made possible through cooperation with DesignBuilder Software, Ltd, Andy Tindale – an EnergyPlus collaborative developer.

The thickness, conductivity, density and specific heat values of the material layers for the constructions in the Composite Wall Construction reference data set have been taken from the ASHRAE report “Modeling Two- and Three-Dimensional Heat Transfer through Composite Wall and Roof Assemblies in Hourly Energy Simulation Programs (1145-TRP),” by Enermodal Engineering Limited, Oak Ridge National Laboratory, and the Polish Academy of Sciences, January 2001.

NOTICE: The U.S. Government is granted for itself and others acting on its behalf a paid-up, nonexclusive, irrevocable, worldwide license in this data to reproduce, prepare derivative works, and perform publicly and display publicly. Beginning five (5) years after permission to assert copyright is granted, subject to two possible five year renewals, the U.S. Government is granted for itself and others acting on its behalf a paid-up, non-exclusive, irrevocable worldwide license in this data to reproduce, prepare derivative works, distribute copies to the public, perform publicly and display publicly, and to permit others to do so.

TRADEMARKS: EnergyPlus is a trademark of the US Department of Energy.

Other Acknowledgments

This work was supported by the Assistant Secretary for Energy Efficiency and Renewable Energy, Office of Building Technology, State and Community Programs, Office of Building Systems of the U.S. Department of Energy, program manager Drury B. Crawley.

Additional support was provided by the Gas Technology Institute.