# Appendix D:
# Description of Design Changes Between the Draft EA and Final EA

**University of Maine Deepwater Offshore Wind Test Site**
**Update of Project Design for Initial Turbine Platform**
**6/23/2011**

## Battery and Grid Mimicking Narrative

Background: An important aspect of testing an isolated wind turbine floating platform is electrical loading of the wind turbine generator. An option of interconnecting the floating wind turbine with the onshore grid via a submarine power cable is limited by many factors such as costs and associated environmental aspects (i.e., an expensive and lengthy sea floor study is needed for cable routing, burial, etc). The University of Maine design team has found that a more cost effective solution is to implement a stand-alone grid simulator on the floating platform itself for electrical loading of the test wind turbine. Such a grid simulator must create a stable fault-resilient voltage and frequency bus (a micro grid) for continuous operation of the test wind turbine.

In March 2011, the National Renewable Energy Laboratory in coordination with the University of Maine performed a modeling task and developed a design specification for such a grid simulator for operating a V-27 225-kW wind turbine to be installed on a floating platform off the coast of Maine.

Description of design:

- Battery and inverter-based grid simulator topology
    - Lithium-based batteries were found to be the best fit in terms of both performance and weight/size limitations. Recommended lithium battery capacity is 50 Ah, based on modeling results.
    - Technology: Sealed lithium.
    - Maximum weight of a single 50-Ah string: 4,400 lbs (including accessories). Number of batteries to be determined but will be approximately 56
    - Note: there will also be a service electrical system on board the unit separate from the grid system. This system will be composed of a 24V DC lead acid battery bank and inverter. This battery bank is charged while the turbine is running and can also be charged by a vessel with a generator through an umbilical connection. There will be approximately 6 batteries with a total weight of 9,000lbs. This system will provide power to the following loads continuously:
        - Instrumentation and control systems,
        - Computers,
        - Data antennas,
        - Navigation safety lighting,
        - Internal lighting, and
        - Ventilation fans.
- Inverter
    - Technology: 3-phase grid forming, 480-VAC voltage source
    - Minimum power rating: 300 kVA continuous
    - Maximum weight: 1,800 lbs

- Enclosure: Force ventilated cabinet.

The proposed layout is shown in the figure below.

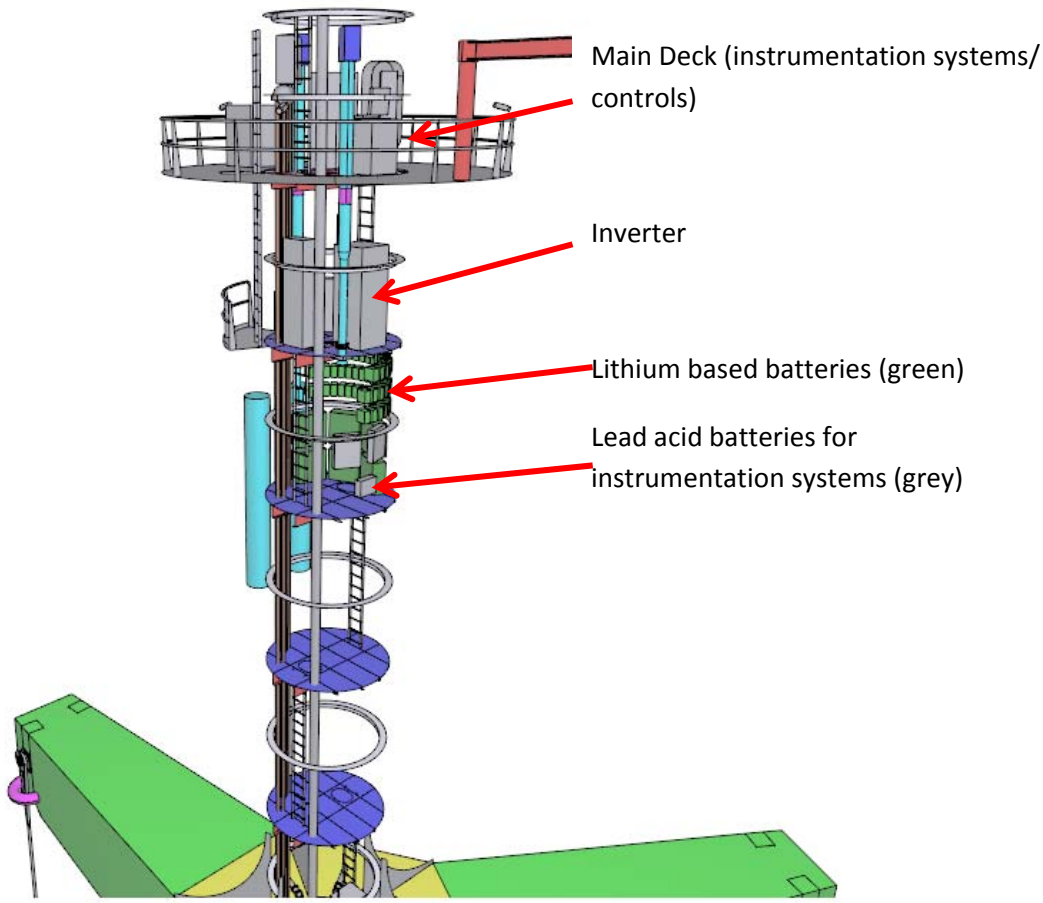


**Power Dissipation**

**Resistive Load Configuration**

The microgrid system shall use electric immersion heaters (electric heaters, contain no fluids) to dissipate excess real power generated by the turbine generators. The heaters will be located in Void 5.1, near the bottom of the upper column. The heating elements will protrude outward from the lower column side shell into the sea water. The heaters shall be connected to the hull with a bolted flange connection. The figure below shows the preferred configuration.

The proposed wind turbine for the intermediate scale project is a Vestas V27 horizontal-axis machine with a power rating of 225 kilowatts, or 301.7 horsepower [1]. Assuming a worst case scenario will require the proposed immersion heaters to dissipate the entirety of this amount even though the onboard electronics, safety systems, data acquisition systems, grid-mimicking system and turbine operational controls will consume an appreciable amount of this power.

Most ocean-going recreational or commercial vessels that possess an appreciable thermal environmental impact are likely powered by a diesel or gasoline internal combustion engine, e.g., a typical Maine lobster boat. For a typical gasoline engine, the thermal efficiency is approximately 20% [1]. A sophisticated diesel might expect 24% [1]. The remainder of the fuel energy is converted to heat, primarily manifested as excess temperatures above ambient in the exhaust. It is worth noting that some of the waste heat results from mechanical energy which is converted to heat through the modest friction present in piston cylinder engines. To dissipate this heat and prevent damage of engine components, measures must be taken. In a marine engine, a wet-exhaust system is often employed that carries cylinder block heat in addition to the exhaust gases away using a pump and ocean water as the cooling agent. With the exception of modest radiation off the engine and some minor free convection, most of the engine heat is pumped into the ocean. For simplicity, here it will be assumed that the entirety of the additional waste heat is discharged with the wet exhaust system ocean water. Assuming the 24% efficient diesel, and equating the 76% waste heat is equivalent to the waste heat of our V27 turbine at 301.7 hp, the diesel shaft power rating would be 95.3 hp. In effect, the waste heat generated by this turbine in the worst possible scenario will be approximately equivalent to a 100 horsepower marine engine functioning at full operational load. Most personal and commercial working vessels, e.g. a Maine lobster boat example, require in excess of 100 hp engines to perform their functions.

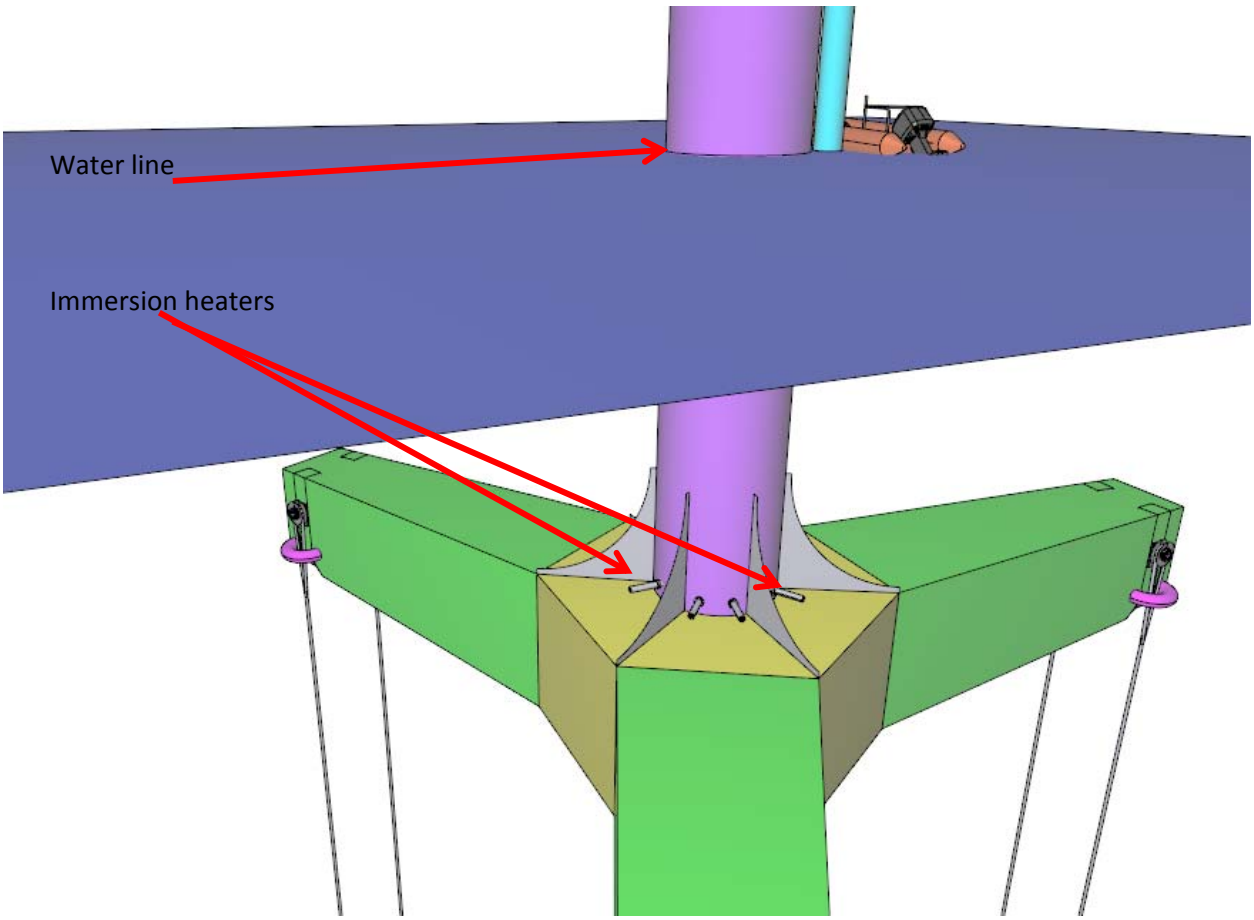

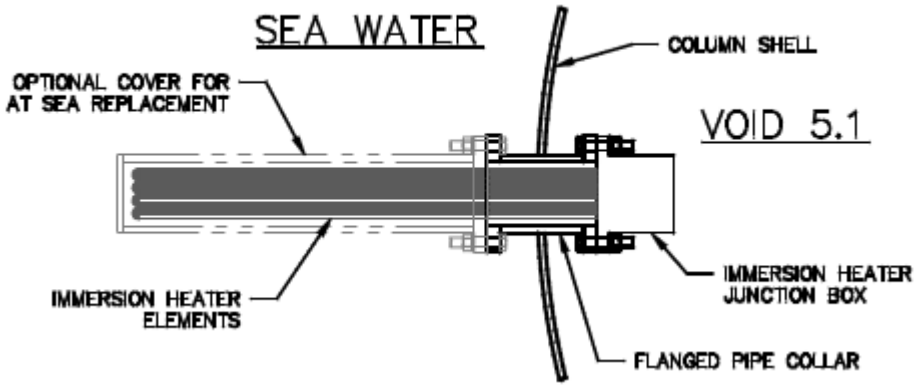


**Figure 1: Preferred Immersion Heater Attachment Detail**

## Tendons

Six tendons (two tendons per arm) are proposed for the TLP floating wind turbine to provide redundancy in the structure in the unlikely event of a single mooring line failure. It is expected that paired mooring lines would also be used for other floating platforms that are tested for the same reason. Offshore oil and gas companies typically require 3 tendons for offshore TLPs. The distance between the two tendons will be approximately 8 feet. The tendons will be synthetic mooring lines having a diameter of approximately six inches, and will not be steel cables as initially planned.

## Interconnection Pipes between TLP Anchors

A limited number of cables and pipes will run between the anchors to maintain the relative position of the anchors (figure below). It is expected that the interconnection pipe will have a diameter of 24 inches, the center of the pipe will be 5 feet off the bottom, and there will therefore be 4 feet of clearance between the pipe and the sea bed, assuming no settlement of the anchors. There are also interconnection cables between the anchors that will be located at the same 5-foot height. These cables will be approximately 2 inches in diameter, and it is expected that the cables will maintain their 5-foot distance off the ocean floor.

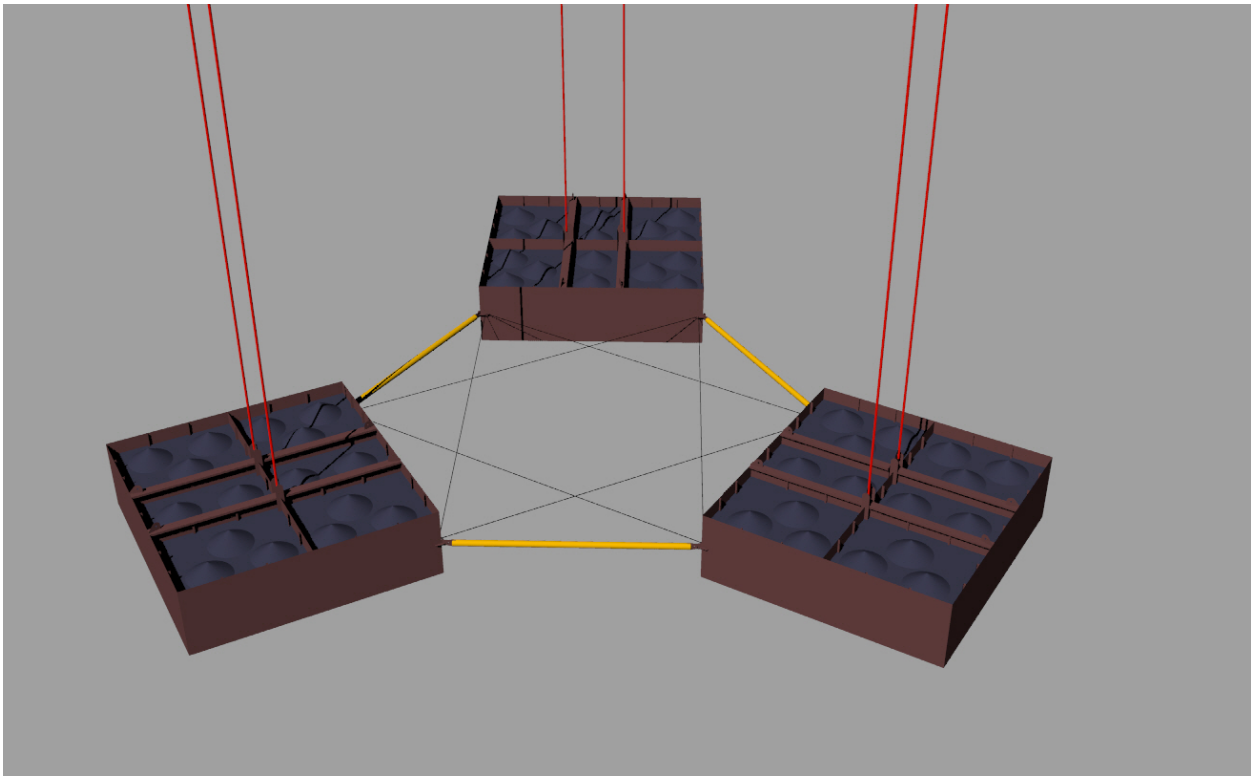

Reference

[1] HL Maclean, LB Lave, Evaluating automobile fuel/propulsion system technologies, *Progress in Energy and Combustion Science* 29 (2003) 1-69.

## Key Dimensions

- Blade length: 13m (42.7ft)
- Rotor diameter: 27m (88.6ft)
- Tower height: 13.7m (44.9ft)
- Tower top diameter: 1.362m (4.47ft)
- Tower base diameter: 1.73m (5.68ft)
- Deck diameter: 7.32m (24ft)
- Upper hull diameter: 3.05m (10ft)
- Upper hull height: 23.47m (77ft)
- Transition piece height: 2.02m (6.62ft):
- Lower hull diameter: 7.92m (26ft)
- Lower hull height: 3.96m (13ft)
- Draft (LAT): 14.33m (47ft)
- Tension leg end dimensions (LxH): 2.44mx3.20m (8ftx10.5ft)
- Lower hull/ Tension leg diameter: 30.48m (100ft)
- Mooring line approx. thickness: 152mm (6in.)
- Gravity anchor size (LxWxH): 10.97mx9.75mx3.05m (36ftx32ftx10ft)
- Gravity anchor bracing ht. above sea bed: approx. 1.5m (5ft)
- Assumed water depth (MLLW): 70-75m (230-246ft)
- Main deck level above LAT: 10.06m (33ft)
- Lower small deck above LAT: 6.4m (21ft)
- HAT – LAT = 4.05m (13.29ft)
- Main deck level above HAT: 6.01m (19.7ft)
- Lower small deck above HAT: 2.35m (7.71ft)

## Materials

- Blades: fiber reinforce polyester resin (fiberglass)
- Tower: steel[1]
- Hull: steel
- Tendons: High molecular weight polyethylene (HMPE) or Vectran synthetic mooring line
- Anchors: Steel box filled with copper slag ballast (or similar) with steel tubing connectors/ tendons for alignment

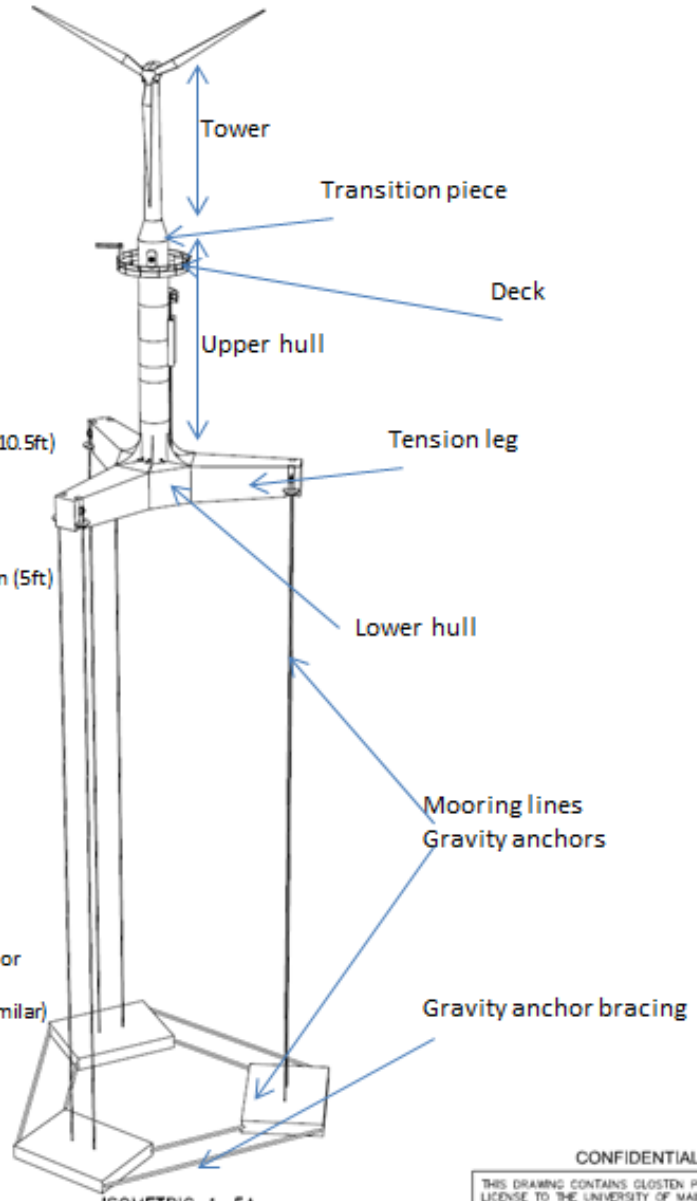


ISOMETRIC 1–5A
GLOSTEN INTERMEDIATE SCALE TLTP

CONFIDENTIAL INFORMATION

THIS DRAWING CONTAINS GLOSTEN PROPRIETARY INFORMATION UNDER LICENSE TO THE UNIVERSITY OF MAINE, AND SHALL ONLY BE USED IN CONJUNCTION WITH THE UNIVERSITY OF MAINE INTERMEDIATE SCALE WIND TURBINE FLOATER TEST PLATFORM PROJECT. IT SHALL NOT BE USED FOR ANY OTHER PURPOSE. REPRODUCTION AND DISTRIBUTION OF THIS DRAWING SHALL BE LIMITED TO SUPPORT OF THIS PROJECT.

### GENERAL NOTES

1. THIS TENSION LEG TURBINE PLATFORM HAS BEEN DESIGNED TO SUPPORT A 225kW WIND TURBINE.
2. PRINCIPAL CHARACTERISTICS:

| | |
|---|---|
| ARM DIAMETER | 100'–0" |
| DEPTH (OVERALL) | 96'–7" |
| DESIGNED DRAFT (LAT) | 47'–0" |
| DESIGNED DRAFT (HAT) | 60'–4" |
| HUB HEIGHT ABV BASELINE | 145'–10" |
| HUB HEIGHT ABV MLLW | 96'–11" |
| MAX BLADE TIP HEIGHT ABV BASELINE | 190'–1" |
| MAX BLADE TIP HEIGHT ABV MLLW | 141'–2" |
| MIN. BLADE TIP HEIGHT ABV HAT | 41'–3" |
| LIGHTSHIP WEIGHT | 231.5 LT |
| INSTALLED DISPLACEMENT AT DESIGNED DRAFTS | |
| LAT | 699.3 LT |
| HAT | 726.9 LT |

### REFERENCES

### REVISIONS

| ZONE | REV | DESCRIPTION | DATE | APPD |
|---|---|---|---|---|
| | | | | |

THE UNIVERSITY OF MAINE DeepCwind CONSORTIUM

INTERMEDIATE SCALE GLOSTEN TLTP
GENERAL ARRANGEMENT
KEY PLAN

THE GLOSTEN ASSOCIATES
Consulting Engineers Serving the Marine Community
1201 Western Avenue, Suite 200
Seattle, Washington 98101-2953
TEL 206.624.7850
WEB www.glosten.com

| Drawn | Checked | Approved | Date |
|---|---|---|---|
| JGB | CJN | DLG | 28 MAY 2011 |

| Scale | Drawing Number | Sheet of | Revision |
|---|---|---|---|
| AS NOTED | 11018–P1–B30–01 | 1 7 | P3 |