Draft Supplemental Environmental Assessment and Notice of Wetlands Involvement

Construction and Operation of a Proposed Cellulosic Ethanol Plant, Range Fuels Soperton Plant, LLC (formerly Range Fuels Inc.) Treutlen County, Georgia

DOE/EA 1597

Prepared for

U.S. Department of Energy

December 2008

Contents

Section **Page**

Acronyms and Abbreviations v
1.0 **Introduction 1**
1.1 Background 1
1.2 Purpose and Need for Proposed Action 2
1.3 Applicable Regulatory Requirements and Coordination 2
1.4 Scope of Analysis 4
1.5 Public Scoping and Agency Consultation 5
1.6 Document Organization 5
2.0 **Description of Changes to Proposed Facility Design and Operation 7**
2.1 Modifications to Facility Components From the October 2007 Proposed Action 7
2.2 Modifications to Proposed Facility Layout 8
2.3 Modifications to Proposed Operations 10
2.4 Modifications to Proposed Operations 10
3.0 **Environmental Consequences Resulting From Modifications to Proposed Design and Operation 14**
3.1 Land Use 14
3.2 Soils 14
3.3 Water Quality 15
3.4 Wetlands 15
3.5 Biological Resources 16
3.6 Protected Species 19
3.7 Noise 19
3.8 Air Quality 21
3.9 Waste Management and Hazardous Materials 24
3.10 Transportation 24
3.11 Aesthetics 25
3.12 Cumulative Impacts of the Proposed Action 26
3.15 Short-Term Uses and Commitment of Resources 26
4.0 **References 27**

Tables

2-1 Components of Proposed Action
3-1 Maximum Annual (PTE) Criteria Pollutant Emissions (maximum operation) for the Initial Phase
3-2 Maximum Annual (PTE) Criteria Pollutant Emissions (maximum operation) for the Build-out Phase
3-3 Air Toxics Impact Analysis
3-4 Analyses for Construction and Production Traffic at RF Soperton Facility

Figures

2-1 Proposed Site Layout
2-2 Process Flow Diagram
2-3 Water and Wastewater Balance
3-1 Stream and Wetland Locations
3-2 Gopher Tortoise Relocation

Appendices

A Confirmation and Transfer of Mitigation Credits
B Gopher Tortoise Correspondence
C Georgia Department of Natural Resources Water Quality Certification

Acronyms and Abbreviations

AADT	Average Annual Daily Traffic
BMP	Best Management Practice
CEQ	Council on Environmental Quality
CFR	Code of Federal Regulations
CO	Carbon Monoxide
CWA	Clean Water Act
dB	decibel
dBA	A-weighted Decibel Scale
DOE	Department of Energy
DNR	Georgia Department of Natural Resources
dtpd	dry tons per day
DSEA	Draft Supplemental Environmental Assessment
EA	Environmental Assessment
EO	Executive Order
EPAct	Energy Policy Act
EPD	Environmental Protection Division
HAP	Hazardous Air Pollutant
hr	hour
I-16	Interstate Highway 16
µg/m3	micrograms per cubic meter
mgd	million gallons per day
NEPA	National Environmental Policy Act
NOx	Nitrogen Oxides
NPDES	National Pollutant Discharge Elimination System
NWP	Nationwide Permit
PM	particulate matter
PSD	Prevention of Significant Deterioration
PTE	potential to emit
ROW	right of way
SCR	Selective Catalytic Reduction
SR	State Route
tpd	tons per day
tpy	tons per year
USACE	U.S. Army Corps of Engineers
USC	U.S. Code
USEPA	U.S. Environmental Protection Agency
VOC	volatile organic compound

1.0 Introduction

1.1 Background

Under the Energy Policy Act (EPAct) of 2005, the U.S. Congress directed the U.S. Department of Energy (DOE) to carry out a program to demonstrate the commercial application of integrated biorefineries for the production of ethanol from lignocellulosic feedstocks. Federal funding for cellulosic ethanol production facilities is intended to further the government's goal of rendering cellulosic ethanol cost-competitive with gasoline by 2012 and, along with increased automobile fuel efficiency, reducing gasoline consumption in the U.S. by 20 percent within 10 years.

In February 2006, pursuant to § 932 of the EPAct, DOE issued a Funding Opportunity Announcement for applications to design, construct, and operate an integrated biorefinery employing lignocellulosic feedstocks (woody material) for the production of combinations of liquid transportation fuels, biobased chemicals, substitutes for petroleum-based feedstocks and products, and energy in the form of electricity or useful heat. Range Fuels, Inc., now Range Fuels Soperton, LLC (RF Soperton) applied for, and was one of six companies selected to negotiate for award of financial assistance to aid in the construction and operation of their planned cellulosic ethanol production plant. In accordance with DOE and National Environmental Policy Act (NEPA) implementing regulations, DOE is required to evaluate the potential environmental impacts of DOE facilities, operations, and related funding decisions. The proposal to use federal funds to support the project requires that DOE address NEPA requirements and related environmental documentation and permitting requirements.

In October 2007, DOE completed an Environmental Assessment (EA) for the *Construction and Operation of a Proposed Cellulosic Ethanol Plant, Range Fuels, Inc. Treutlen County, Georgia, (DOE/EA 1597*) to determine potential environmental and socioeconomic impacts that would result from the construction and operation of the cellulosic ethanol production facility near the town of Soperton, Georgia, in Treutlen County. Subsequent to the issuance of a Finding of No Significant Impact (FONSI) for the October 2007 EA, there were changes to the design and operating parameters of the proposed cellulosic ethanol facility. In compliance with NEPA (42 U.S. Code [USC] §§ 4321 *et seq.*) and DOE's NEPA implementing regulations (10 Code of Federal Regulations [CFR] Section 1021.330) and procedures, this draft supplemental environmental assessment (DSEA) examines the potential environmental impacts of the changes to the original project design. The October 2007 EA is hereby incorporated by reference into this DSEA.

This DSEA evaluates the potential individual and cumulative effects of the modified project design relative to the No Action Alternative. No other alternatives are analyzed in detail. The October 2007 EA provides a discussion of alternate sites that were considered but determined to be unfeasible. This DSEA has been prepared under DOE's regulations and guidelines for compliance with NEPA (42 USC §§ 4321 *et seq.*). This DSEA will be available

to interested members of the public and to Federal, state, and local agencies for review and comment prior to DOE's final decision on the modified Proposed Action.

DOE proposes to provide up to $76 million in financial assistance to RF Soperton to support construction and initial operation of a cellulosic ethanol production plant in the Treutlen County Industrial Park near Soperton, Georgia. As noted above, DOE is required to evaluate the potential environmental impact of this funding decision. Environmental impacts could result from this funding decision as a direct result of construction supported by the financial assistance or from the subsequent operation of the facility, which is directly tied to its construction. Initial analysis of the proposed RF Soperton project determined that no significant impacts to the human environment would result. However, because NEPA encourages completion of environmental analysis early in the project process, it is not unusual for project design to change from the preliminary designs analyzed through an EA, resulting in the need for additional analysis. Because of the changes to design and operation since completion of the October 2007 EA, DOE has chosen to complete a Supplemental EA to address potential impacts from those changes.

It should be noted that even if DOE does not ultimately provide any funding in support of construction or operation of the facility, RF Soperton would be able to pursue other funding to support the project and still could potentially construct the facility.

1.2 Purpose and Need for Proposed Action

The purpose and need for the Proposed Action have not changed from the October 2007 EA. In compliance with the statutory mandate of EPAct § 932, DOE has implemented a program to demonstrate the commercial application of integrated biorefineries that produce ethanol from lignocellulosic feedstocks. The facility that would be constructed and operated as a result of the Proposed Action would meet the requirements of EPAct §932 by using renewable supplies of timber and forest residue, to produce ethanol, methanol, and other mixed alcohols. The Proposed Action also would support DOE's mission to reduce dependency on fossil fuels and commercialize biomass technologies. By providing financial assistance to support the construction of the proposed cellulosic ethanol production plant, DOE would support national energy needs and the development of alternative fuel sources.

1.3 Applicable Regulatory Requirements and Coordination

NEPA is integrated with other planning activities early in project planning to ensure that Federal decisions consider environmental and socioeconomic factors in a systematic manner. Requirements of applicable permits and regulations are also included in the evaluation performed under the NEPA process.

Federal statutes, regulations, and executive orders (EOs) applicable to one or more components of the Proposed Action and No Action Alternative were identified in the October 2007 EA and are not repeated here. The reader is directed to the October 2007 EA for that information.

The following is a list of permits and regulatory approvals that are planned for the Proposed Action.

- Georgia SIP Air Construction Permit: Application submitted April 9, 2007, Permit Issued June 27, 2007, Permit No. 2869-283-0005-S-01-0
- Georgia SIP Air Construction Permit Modification: Permit Issued June 27, 2007, Permit No. 2869-283-0005-S-01-0, Application submitted November 19, 2008, Expect Permit issued by February 2009.
- Georgia SIP Air Operation Permit is issued in conjunction with the SIP Air Construction Permit, expect permit issued by February 2009
- U.S. Army Corps of Engineers (USACE) Clean Water Act (CWA) Section 404 Individual Permit to replace culvert under Commerce Drive and to provide after-the-fact authorization for inadvertent encroachment into two wetland areas on the property. A Jurisdictional Determination was received at the end of October, 2008 (signed 10/24/08), and permit approval was received on December 2, 2008.
- Georgia Environmental Protection Division (EPD) CWA Section 401 Water Quality Certification for CWA Section 404 Individual Permit (required for the 404 permit to be authorized). Certification signed November 17, 2008 (Appendix C).
- USACE CWA Section 404 Nation Wide Permit (NWP) to construct new electric transmission line. Permit issued to Georgia Power who has completed construction of transmission line and new substation.
- Georgia General National Pollutant Discharge Elimination System (NPDES) Storm Water Permit due to Construction Activities For Stand Alone Construction Projects – GAR100001: Permit coverage granted November 2007
- Industrial Wastewater Pre-Treatment Discharge Permit to Soperton: Submit application March 2009, Expected Permit by September 2009
- Georgia General NPDES Storm Water Discharges Associated with Industrial Activity – GAR000000, Submit application March 2009, Expected Permit coverage granted by September 2009
- US Environmental Protection Agency (USEPA) NPDES Industrial Wastewater Discharge Permit – Forms 1 and 2D and per Georgia Rules and Regulations for Water Quality Control, 391-3-6-.06, Submit application March 2009, Expected Permit issued by September 2009
- Spill Prevention Control and Countermeasures Plan – 40 CFR 112, Plan development pending. Plan completed and implemented by December 2009.
- Storm Water Pollution Prevention Plan – Requirement of Georgia General NPDES Storm Water Discharges Associated with Industrial Activity – GAR000000, Plan development pending. Plan completed and implemented by December 2009.
- Is there a need to prepare a Land Disturbing Activity Plan in accordance with Georgia Erosion and Sedimentation Control Act of 1975

1.4 Scope of Analysis

This document analyzes the potential environmental and socioeconomic impacts that would result from the changes in proposed project design and operation. This DSEA evaluates the potential individual and cumulative effects of the modified Proposed Action. This DSEA considers the same No Action Alternative as the October 2007 EA, the potential impacts that would occur if the proposed cellulosic ethanol production plant were not built and operated. Because the modifications to the Proposed Action would not change the analysis of the No Action Alternative, the No Action Alternative is not discussed further in this DSEA. The reader is directed to the October 2007 EA for a description of the No Action Alternative and discussion of its potential impacts.

With the exception of the wetland impacts, the Affected Environment has not changed substantially since completion of the October 2007 EA. Therefore, description of the Affected Environment is not repeated in this DSEA and the reader is directed to October 2007 EA for that information.

1.4.1 Resource Areas Eliminated From Detailed Analysis

Certain resource areas previously evaluated in the October 2007 EA would have no potential for additional or altered impacts as a result of the modification to the proposed facility design and operation. Therefore, this DSEA does not further evaluate potential impacts to:

- Geomorphology, Geology, and Seismic Hazard: There have been no modifications to the project that would result in changes to the analysis of these resource areas and they are not discussed further in this DSEA.
- Prime Farmland: No additional prime or unique farmland would be impacted as a result of the modifications and this resource area is not discussed further in this DSEA.
- Safety and Occupational Health: There have been no modifications to the project that would result in changes to the analysis of these resource areas and they are not discussed further in this DSEA.
- Meteorology: There have been no modifications to the project that would result in changes to the analysis of this resource area and it is not discussed further in this DSEA.
- Waste Management (construction wastes): There would be no change in the waste generated by construction of the facility and this is not discussed further in this DSEA. There would be an increase in use of feedstock and an associated increase in char remaining. The change in volume of this waste product is addressed in this DSEA.
- Cultural Resources: There have been no modifications to the project that would result in changes to the analysis of this resource area and it is not discussed further in this DSEA.
- Utility Infrastructure: There have been no modifications to the project that would result in changes to the analysis of this resource area and it is not discussed further in this DSEA.

- Socioeconomic Factors: There would be no change in the construction workforce, construction duration, number of workers employed, or feedstock consumption once the facility is operational. Therefore, there would be no change in the socioeconomic conditions relative to these factors from the October 2007 EA.
- Environmental Justice: There have been no modifications to the project that would result in changes to the analysis of this resource area and it is not discussed further in this DSEA.
- Protection of Children: There have been no modifications to the project that would result in changes to the analysis of this resource area and it is not discussed further in this DSEA.

1.4.2 Resource Areas Considered In Detail

Potential impact to the resource areas below are discussed in detail in this document:

- Land Use
- Noise
- Soils
- Hydrology
- Water Quality
- Wetlands
- Biological Resources
- Protected Species
- Air Quality
- Waste Management (operations waste)
- Hazardous Materials
- Transportation
- Socioeconomic Factors (wood supply)
- Aesthetics

1.5 Public Scoping and Agency Consultation

This Draft Supplemental Environmental Assessment will be available for public review and comment for at least 15 days. DOE will send a Notice of Availability to the distribution list from the initial Environmental Assessment and publish a notice in the local paper. DOE will take into account any comments received by agencies and interested parties and modify the Supplemental EA, if warranted.

1.6 Document Organization

This DSEA follows the organization established by the CEQ regulations (40 CFR, Parts 1500-1508) and includes the following sections:

- 1.0 Introduction
- 2.0 Description of Changes to Proposed Facility Design and Operation

- 3.0 Environmental Consequences
- 4.0 References
- Appendices

2.0 Description of Changes to Proposed Facility Design and Operation

This DSEA addresses the possible environmental impacts of the modifications to the proposed cellulosic ethanol facility in Treutlen County, Georgia. Section 2.1 describes the modifications to the activities that would occur if DOE provides up to $76 million for construction and operation of the cellulosic ethanol plant.

2.1 Modifications to Facility Components From the October 2007 Proposed Action

Changes to the facility components from the description presented in the October 2007 EA are identified in Table 2-1. In addition to the planned design and operation changes, Table 2-1 also captures after the fact impacts to wetlands that occurred during the initial site preparation activities.

Currently, construction activity has been limited to site clearing and grading and construction of the warehouse, which is not complete. Procurement of equipment has been initiated, however, none has been delivered to the site at this time. The reported incursions into the wetlands occurred during early stages of sitework.

TABLE 2-1
Components of Proposed Facility
RF Soperton EA

Component	Change from 2007 EA
Chipper	No change from previously evaluated condition.
Chip Storage Piles	Storage capacity increased by 1,500 tons of wet feedstock (total capacity of 20,000 tons). Added a chipped feedstock storage area to hold 4,000 tons.
Feedstock Dryers	6 dryers added to process to dry up to 2,625 tpd of feedstock. No feedstock dryers in original design. Added as emission source in Phase 1, to be controlled in subsequent phases Noise impacts have been evaluated.
Log Debarker	Added this emission source. Noise impacts have been evaluated.
Hammer Mill	Two units to process up to 2,625 tpd of dry feedstock. Not included in original design. Added this emission source. Noise impacts have been evaluated.
Conveyors	No change from previously evaluated condition.
Biomass Conversion Units	At final construction, capacity of 2500 tpd (five conversion modules at 500 tpd per module; each module consisting of four 125 tpd units) has been revised to a capacity of 2625 tpd (Phase 1 - one 125 tpd unit, Phase 2 - addition of five 125 tpd units, and Phase 3 - addition of fifteen 125 tpd units).

TABLE 2-1
Components of Proposed Facility
RF Soperton EA

Component	Change from 2007 EA
Water Requirements	No change from previously evaluated condition.
Natural Gas Demand	No change from previously evaluated condition.
Electricity	No change from previously evaluated condition.
Product and Conversion Storage Tanks	No change from previously evaluated condition.
Loadout Racks	No change from previously evaluated condition.
Wastewater Treatment	No change from previously evaluated condition.
Fire Water Pond, Spray Pond, and Stormwater Detention Pond	No change from previously evaluated condition.
Roads	No change from previously evaluated condition.
Railroads	No change from previously evaluated condition.
Other improved surfaces	No change from previously evaluated condition.
Parking and walkways	No change from previously evaluated condition.

In addition to the component modifications that would be implemented by RF Soperton, other changes from the proposed project analyzed in the October 2007 EA include:

- Change in the planned construction of the project from five construction phases to three construction phases, Phase 1, Phase 2, and Phase 3.
- Change in capacity to process 2,625 dry tons per day (dtpd) of feedstock, an increase of 125 dtpd (5 percent feedstock consumption increase).
- Georgia Power has completed construction of the electric transmission line and the onsite substation.
- Placement of fill along the edge of a wetland during construction of a stormwater basin.
- Clearing of a narrow strip of a forested wetland during site preparation.
- Monitoring and relocation of gopher tortoises.

These actions are considered in this analysis as part of the modified Proposed Action.

2.2 Modifications to Proposed Facility Layout

The changes to the proposed site layout from that described in the October 2007 EA are:

- Increased capacity of wet feedstock storage by 1,500 tons.
- Added chipped feedstock storage of 4,000 tons.
- Added six feedstock dryers with total capacity of 2,625 dtpd.
- Increased disturbed area by 9.488 acres (7 acres forested, 2.488 acres previously cleared).
- Modified spatial arrangement of components to better fit site (Figure 2-1).

DRAWING NUMBER: GASP0801-921-CVS-300

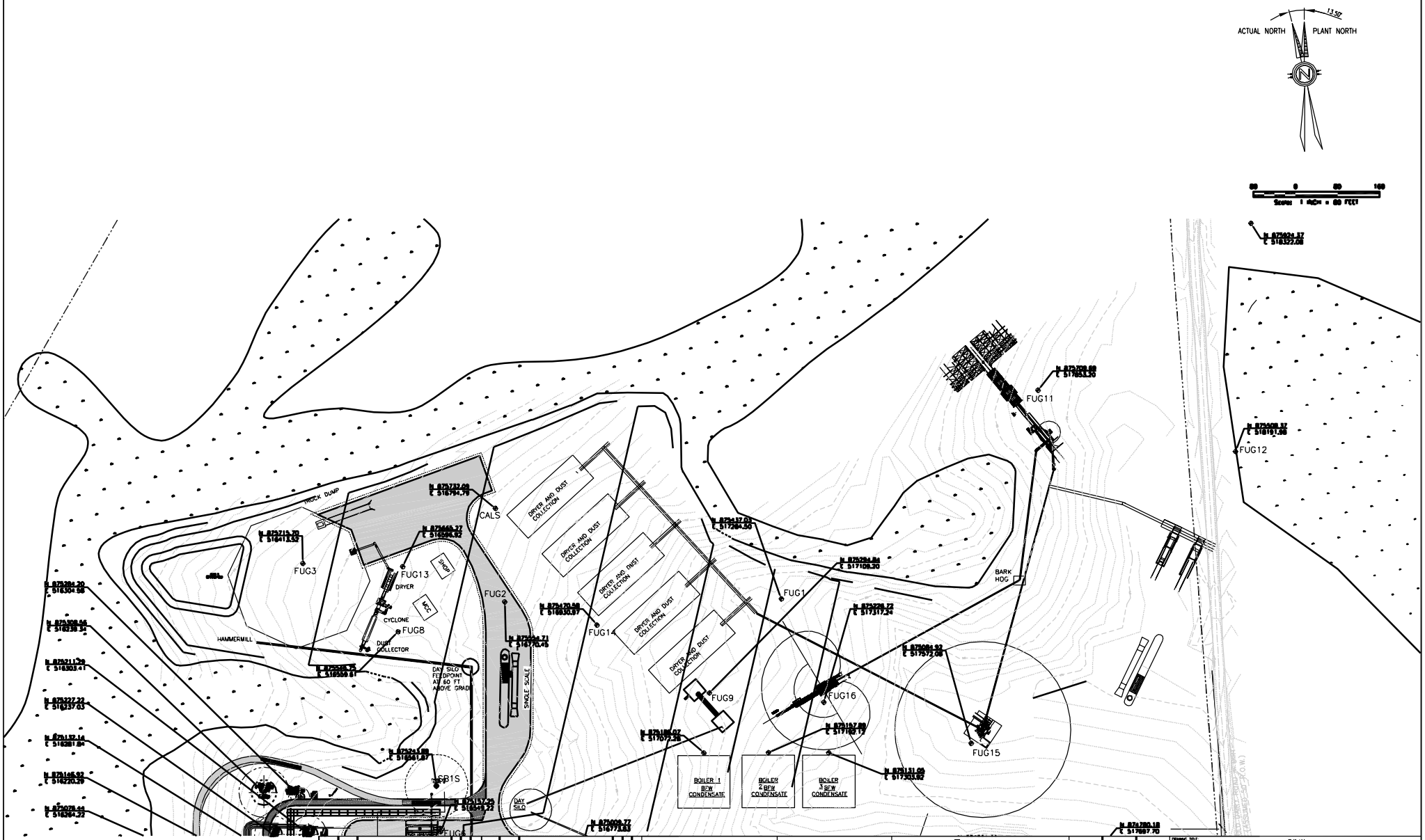

PRELIMINARY
PROPRIETARY AND CONFIDENTIAL

REV	DATE	DESCRIPTION	DRN	CHK	APP
1	10/21/08	POWER TRANSFER POINTS AND SHEET LAYOUT	TOC		
0	9/23/08	INITIAL ISSUE	JRV	ATC	ATC

CH2MHILL
Lockwood Greene

CH2MHILL REFERENCE DRAWING NUMBER:
C-2300.DWG

THIS AND ANY OTHER COUNTERPARTS ARE PROPRIETARY TO RANGE FUELS AND SHALL NOT BE REPRODUCED OR DISCLOSED, IN WHOLE OR IN PART, OR USED FOR ANY PURPOSE WITHOUT DIRECT WRITTEN AUTHORIZATION.

Range Fuels Soperton Plant, LLC
A Subsidiary of Range Fuels
11101 W. 120TH AVE.
SUITE 200
BROOMFIELD, CO 80021
Phone: (303) 410-2100
Fax: (303) 410-2102
Web: www.rangefuels.com

DESIGNED BY:	TOC	23-SEPT-2008
DRAWN BY:	JRV	23-SEPT-2008
CHECKED BY:	ATC	23-SEPT-2008
APPROVED BY:		
SCALE:	N/A	
FILE NAME:	GASP0801-921-CVS-300	

DRAWING TITLE:
CIVIL
CONCEPTUAL SITE LAYOUT
EMISSIONS PLANS

PROJECT: SOPERTON PLANT

PROJECT NO.: GASP0801

DRAWING NUMBER: GASP0801-921-CVS-300

SHEET NUMBER: 1 OF 2

REV: 1

The change in the spatial arrangement of the facility components is for overall operations efficiency and does not alter any impact analyses completed in the October 2007 EA. Therefore, the changes in spatial layout of the facility are not further considered in this DSEA. The remaining changes to the proposed facility layout are discussed in Section 3, as appropriate, for resource areas in which these changes may result in a change from the initial analysis.

2.3 Modifications to Proposed Construction

The changes to the proposed construction from that described in the October 2007 EA are:

- Construction schedule revised.
- Construction changed from five phases to three.
- Erosion, Sedimentation and Pollution Control Plan wetland buffers not entirely maintained due to two incursions.
- Gopher tortoise (*Gopherus polyphemus*) relocation complete.

The RF Soperton construction schedule has changed. Site preparation began in November 2007 and RF Soperton proposes to begin installation of process equipment and supporting utilities and structures in 2009. Construction would proceed in three phases, with each phase brought on-line for production as it is completed. Phase 1 would be completed in spring 2010, Phase 2 would be completed approximately 14 to 18 months after Phase 1, and Phase 3 would follow completion of Phase 2. At completion of Phase 3, the plant would begin operating at full capacity. The change in construction schedule and phasing resulted in a shift in start of operations of approximately 18 months, but does not result in any changes to potential impacts analysis. The changes to construction schedule and phasing are not discussed further.

2.4 Modifications to Proposed Operations

Modifications to the proposed facility operations that differ from those described in the October 2007 EA are:

- Proposed plant operation would be characterized as 24 hours a day for up to 365 days per year, with an assumed 90 percent availability (approximately 330 actual operating days per year), rather than 24 hours a day for 350 days per year, reflecting an availability of approximately 96%. The original projected availability was unrealistically high as determined by reliability analysis and comparison with historical availabilities for similar industrial installations.

- Proposed minor decrease in annual feedstock consumption from 875,500 tpy to 862,000 tpy (1.6 percent decrease) due to projected loss of operating days with 90% facility availability.

- Proposed daily feedstock demand has been increased by 125 dtpd , from 2,500 dtpd to 2,650 dtpd. To achieve an annual throughput of 862,000 tpy in a reduced number of operating days, the daily throughput must increase slightly, from 2,500 dtpd to 2,650 dtpd.

- Proposed annual production has decreased from 120,000,000 gallons total product (100,000,000 gallons ethanol, 20,000,000 gallons methanol) to 84,000,000 gallons total product, assuming a 90% capacity factor and a 50% ethanol, 50% methanol mix. The mix of ethanol and methanol may change based on market factors.
- The denaturant for ethanol production has been switched from methanol to natural gasoline.
- The number of trucks delivering feedstock to the facility daily has increased from 254 to 267 trucks per day, an increase of 13 trucks per day, to accommodate the increase in daily throughput from 2,500 dtpd to 2,650 dtpd maintaining annual production levels with fewer operating days.
- Air emissions controls have changed by the addition of 6 baghouses for particulate matter (PM) control, selective catalytic reduction using urea for nitrogen oxides (NOx) control, and 3 additional flares for VOC and HAP control.

A revised process flow diagram is shown in Figure 2-2. A revised water balance for the production process is shown in Figure 2-3.

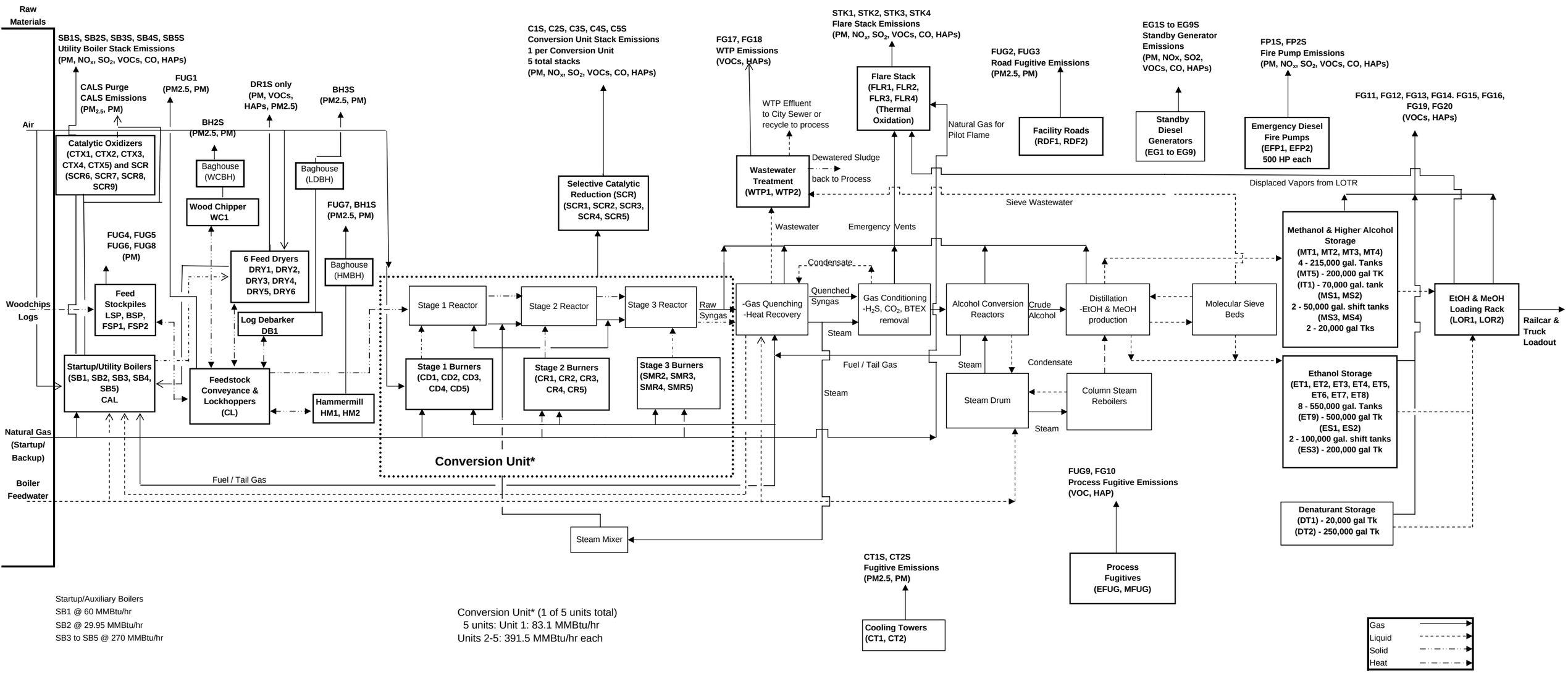

Startup/Auxiliary Boilers
SB1 @ 60 MMBtu/hr
SB2 @ 29.95 MMBtu/hr
SB3 to SB5 @ 270 MMBtu/hr

Conversion Unit* (1 of 5 units total)
5 units: Unit 1: 83.1 MMBtu/hr
Units 2-5: 391.5 MMBtu/hr each

Figure 2-2 - Process Flow Diagram
Range Fuels Biofuels Facility
Treutlen County, GA

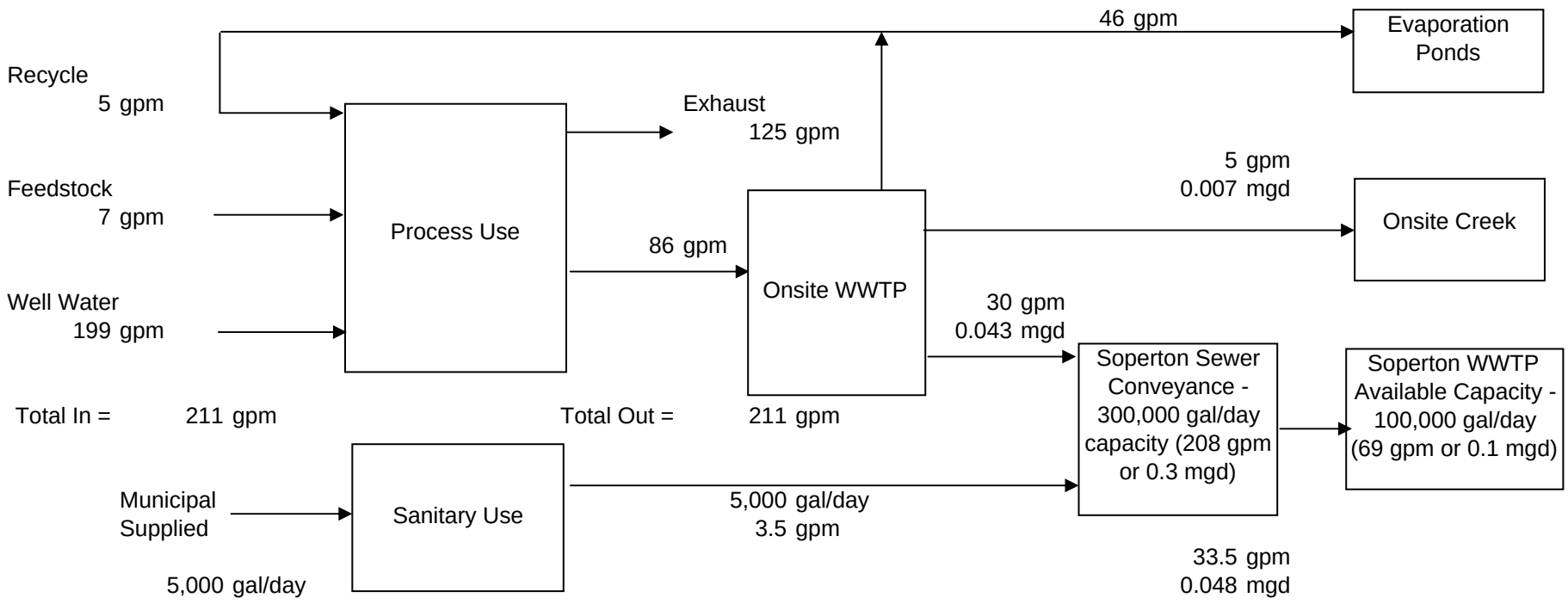

Figure 2-3
Water and Wastewater Balance
Range Fuels Environmental Asse

3.0 Environmental Consequences Resulting From Modifications to Proposed Design and Operation

The following sections discuss the changes in potential impacts that may result from implementing the proposed modifications to the design and operation of the cellulosic ethanol facility.

3.1 Land Use

An additional 7.0 acres of planted pine forest and 2.488 acres of previously cleared undeveloped Industrial Park land would be converted to facility grounds to accommodate the modifications to the feedstock handling. The total conversion of forested land to industrial facility would increase from approximately 13 acres to 20.0 acres, which would remain a negligible impact on forestland in Treutlen County. As noted in the October 2007 EA, forestry (mostly pine tree plantations) accounts for almost 80 percent of all land use in the County, which has an area of 201 square miles (128,640 acres). The additional 7.0 acres will reduce planted pine forest by about 0.01% in the County, which represents a negligible long-term impact.

3.2 Soils

An additional 9.488 acres of soils would be disturbed through the use of heavy equipment for clearing and grading. Disturbance to soils would occur from compaction and from exposure through removal of vegetation. The total disturbed area would be kept to the minimum necessary to complete the work and would be confined to the final site boundaries.

Soil disturbance could result in increased erosion potential from loss of ground cover and exposure of bare soils to precipitation and runoff. Potential temporary impacts to water quality that could result are discussed in Section 3.3. Potential impacts would be controlled or avoided through the use of appropriate best management practices (BMPs) and soil stabilization/revegetation techniques following construction. Appropriate BMPs would be selected based on site-specific conditions and could include, but would not be limited to, sediment barriers (silt fence or straw bales), a detention pond, and establishment of improved construction entrances. Following construction, exposed surfaces would be re-vegetated and final site grading would direct runoff to a stormwater detention pond that would be located in the western portion of the feedstock area.

Additional soil impacts from construction would be minor and temporary. The use of construction BMPs and post-construction stormwater BMPs would reduce potential impacts from erosion and stormwater runoff. Any long-term impacts would be negligible.

3.3 Water Quality

Clearing of the additional 7.0 acres of land would have minor additional impacts to water quality. As discussed in the October 2007 EA, impacts on water quality could result from construction activities that lead to soil disturbance and exposed soil, which can create the possibility of transport of sediment and soil-bound pollutants into streams. Transport could occur downslope or into immediately adjacent waters. Any potential water quality impacts would be temporary and limited to the areas downslope from construction footprints. Implementation and maintenance of BMPs as described in Section 2.1.3 of the original EA would minimize the potential for such impacts and prevent significant construction-related impacts. Turbidity monitoring at stormwater discharge locations would be performed as a condition of the NPDES construction general permit, obtained in 2007, to confirm that no significant adverse impacts to water quality would result.

Post-construction, the additional 7.0 acres of the site would have vegetation removed and be subject to increased runoff rates. Following construction, exposed surfaces would be re-vegetated and final site grading would direct runoff to a stormwater detention pond that would be located in the western portion of the feedstock area. These onsite post-construction stormwater controls would be sufficient to prevent any downstream impacts to water quality.

The encroachment into two wetlands totaling 0.61 acres resulted in a temporary minor impact to water quality from soil disturbance. These impacts ceased after the unauthorized work in wetlands was halted. During construction of the stormwater retention pond, 0.54 acres of one wetland were filled and the associated buffer eliminated. Because this pond prevents runoff into the wetland, the loss of buffer does not impact water quality. A line was cleared through 0.07 acres of another area of the wetland during site preparation. This buffer was replanted to native vegetation and no long-term impacts to water quality will result. Neither encroachment resulted in more than negligible temporary impacts to hydrology.

3.4 Wetlands

During site preparation activities, two wetland areas were impacted (Figure 3-1). Upon discovery of these unauthorized encroachments into wetlands, RF Soperton self-reported the infraction to the U.S. Army Corps of Engineers, Savannah Regulatory District and initiated after-the-fact permitting for the infractions. The Clean Water Act Section 404 Individual Permit was issued on December 2, 2008 and contains the following Special Conditions:

- All work will be performed in accordance with the terms of the permit that shall be maintained at the work site whenever work is being performed. The permittee shall assure that all contractors, subcontractors, and other personnel performing the permitted work are fully aware of the permit's terms and conditions.
- The permittee shall comply with all conditions included in the Section 401 Water Quality Certification issued by the Georgia Department of Natural Resources, for the subject project.

- The permittee shall obtain fill material from a borrow area that is free of contaminants and pollutants.
- All work conducted shall be located, outlined, designed, constructed, and operated with the minimal requirements as contained in the Georgia Erosion and Sedimentation Control Act of 1975, as amended. Utilization of pleas and specifications as contained in the "Manual for Erosion and Sediment Control, Latest Edition", published by the Georgia Soil and Water Conservation Commission or their equivalent will aid in achieving compliance with the aforementioned minimal requirements.
- The permittee shall use appropriate erosion and siltation controls and maintain them in effective operating condition during construction. All exposed soil and other fills shall be permanently stabilized at the earliest practicable date.
- The permittee shall insure that this project complies with all applicable rules, requirements, and/or regulations of the Federal Emergency Management Agency with regard to any activities in designated flood plains.
- The permittee shall purchase 10.39 mitigation credits from Wilkinson-Oconee Mitigation Bank and provide the USACE with proof of purchase.
- Exclusion fencing will be placed around the proposed construction area prior to construction. In the event that a gopher tortoise burrow may be impacted, the Gopher Tortoise Burrow Excavation and Translocation Protocol will be followed.
- In the event the eastern indigo snake is found, United States Fish and Wildlife Services would be notified and an informal consultation would be initiated to avoid impacts and to resolve any concerns.
- The informational pamphlets about the eastern indigo snake, included with permit, will be disseminated to workers prior to construction activities.

There has been a change from the Erosion, Sedimentation and Pollution Control Plan (ESPCP) as a result of the encroachment into two wetlands during site preparation. That encroachment failed to meet ESPSP requirement for a 25-foot undisturbed buffer zone around all wetlands, both during and after construction. This change is discussed in Section 3.3. One encroached wetland and its associated buffer has been restored. Appropriate mitigation, as determined by the USACE and the Georgia Standard Operating Procedures for wetland mitigation, has been implemented by RF Soperton through purchase of mitigation credits from a commercial mitigation bank (see Appendix A). With the implemented mitigation, the encroachments are considered to have no net impacts on the wetland.

3.5 Biological Resources

There would be no additional impacts to biological resources from operation of the modified facility. However, there would be additional impacts to biological resources

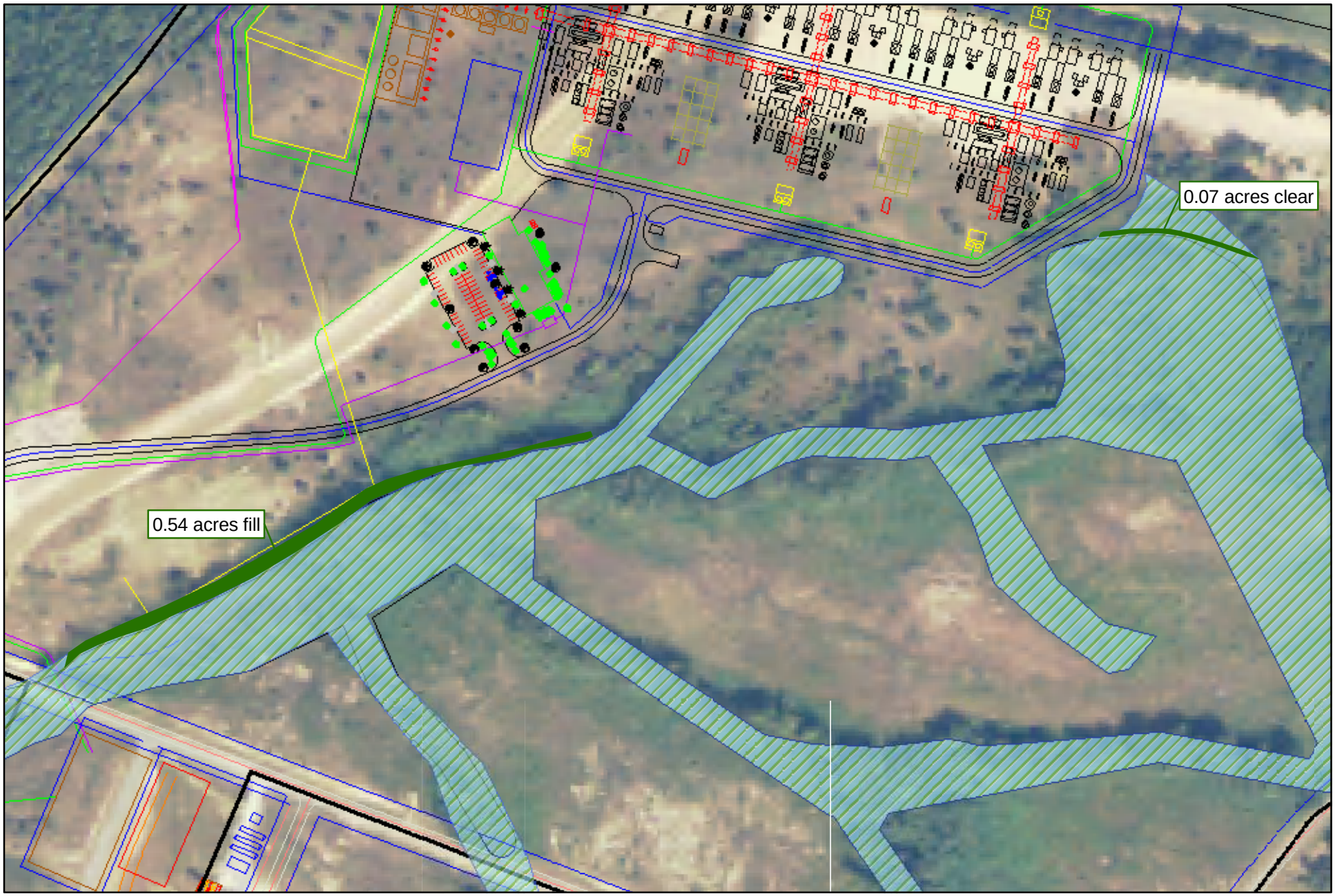

Impacted Wetland

Existing Wetland Boundary

N

0 200 400 600 Feet

Wetlands Incursions
Range Fuels Biofuels Facility
Soperton, Treutlen County, Georgia

File Path: \\boomer\G\projects2\RangeFuels\MXD\Wetland_Incursions.mxd, Date: May 30, 2008, User: SSmith21

(plants and animals) and habitat quality (foraging and nesting) resulting from the additional land clearing to accommodate the modifications. Disturbance from construction would directly alter the plant communities occurring in the 7.0 acres of planted loblolly pine that would be cleared. The additional 7.0 acres that would be cleared, when combined with the 2.488 acres of previously cleared, undeveloped land and clearing for the original design would represent a minor, but long term impact to vegetation.

It is expected that wildlife would be displaced from the 9.488-acre area and immediately adjacent lands during clearing and construction. The number of animals displaced would not be large, as the planted pine provides limited habitat quality. There are extensive forested lands and other natural habitats adjacent to the facility site. All portions of the facility site are connected to off-site habitats through the preserved riparian corridors and forest habitat. In natural environments, terrestrial animal populations typically are below the level that the habitat can sustain (the theoretical carrying capacity). This results from disease and parasites, predation, competition, imperfect distribution within the environment, and episodic extrinsic perturbations including wildfire, flood and drought (Hedrick, 1984; Ricklefs, 1990; Robinson and Bolen, 1984). Because populations typically are below the theoretical carrying capacity, displaced animals are able to relocate to other suitable sites and assimilate without negative population consequences. Direct observations of vegetation in the areas that would be preserved around the facility indicate that browsers and grazers are below the level that could be sustained at present, as there is no evidence of limiting herbivory pressure and there are unconsumed plant resources available. Because the area is currently within a severe drought (EPD, 2007), wildlife population numbers are likely further depressed below normal levels. Animal populations respond to reduced water in the environment with direct mortality from water stress and also through induced reproductive depression in response to environmental cues (Robinson and Bolen, 1984). As a result of the drought, it is likely that there is more unoccupied habitat than would be expected under normal conditions, which would enhance the ability of any displaced animals to assimilate into new locations. At the RF Soperton site, the ability of displaced animals to relocate to suitable habitat would be enhanced because of the ability to travel along the preserved riparian corridors and forested areas to locate new suitable habitat. Because current conditions are such that ample habitat is expected to be available for assimilation of displaced animals, any secondary impacts to animal populations in the area surrounding the RF Soperton facility would be expected to be negligible. Any impacts to wildlife would be expected to be negligible.

Incidental wildlife mortality, both onsite and in the surrounding area, could result from construction-related traffic. However, any such losses would not threaten local populations with extinction.

Once operational, the constant activity at the facility could prevent some animals from returning, but others would be expected to acclimate to the disturbance and resume use of the adjacent areas. Incidental wildlife mortality could result from operational vehicle traffic resulting from worker commutes and deliveries and shipments. However, any such losses would not threaten local populations with extinction and would be negligible in the regional setting. No other impacts to wildlife would be expected from operation of the facility.

Because logging residues and unmerchantable timber are removed from harvest sites during site preparation for replanting, this material is not available as part of the ecological community and does not provide habitat for nearby animals. Therefore, no impacts to wildlife habitat are expected from RF Soperton purchase of additional feedstock materials.

3.6 Protected Species

There has been no change in the procedure should additional gopher tortoises need to be relocated. The reader is directed to the October 2007 EA for a description of the procedures for dealing with any new gopher tortoise activity.

The gopher tortoise is a state-threatened species that occurs in the vicinity of the proposed facility. With the extreme drought in southeast Georgia, the forested wetland to the north of the proposed facility has experienced extended dry conditions. The wetland is normally impassable to gopher tortoises due to the presence of permanent standing water. Gopher tortoises apparently moved into the proposed facility area from the north and west through the temporary travel corridor created by the drought.

RF Soperton coordinated with the Georgia Department of Natural Resources (DNR) to develop and implement a gopher tortoise relocation plan (Appendix GT). The Georgia DNR supervised tortoise relocation activities during summer 2008 and additional tortoise exclusion fencing was placed around the modified construction area. Burrow locations and tortoise relocation areas are shown in Figure 3-2.

RF Soperton continues to monitor the area for new gopher tortoise activity. The tortoise relocation area is suitable habitat for gopher tortoises and any impacts to the species would be expected to be minor and temporary. Once the drought ends, it is expected that gopher tortoises would be much less likely to move onto the facility site and no long-term impacts would be expected.

Additional informal consultation with USFWS in December 2008 confirmed that there are no known occurrences of federally protected species in Treutlen County (Bill Wikoff, personal communication, 2008). There is potentially suitable habitat for the federally endangered red-cockaded woodpecker (Picoides borealis) and the federally threatened eastern indigo snake (Drymarchon corais) elsewhere in Treutlen County and known occurrences in adjacent counties. Neither of these species or any other federally listed species are known to occur at the project site. Noise

There would be a 5 percent increase in the average daily quantity of feedstock delivered to the facility, resulting in a 5 percent average daily increase in truck traffic, from 254 trucks to 267 trucks per day, although the total number of annual deliveries would decrease by 1.6 percent as a result of fewer projected days of facility operation. The impacts of such small increases would be negligible and would not change the conclusions reached in the October 2007 EA.

Additional facility processing equipment not included in the October 2007 EA includes feedstock dryers, a log debarker, and two hammer mills. The hammer mills contribute minimal additional noise beyond that discussed previously.

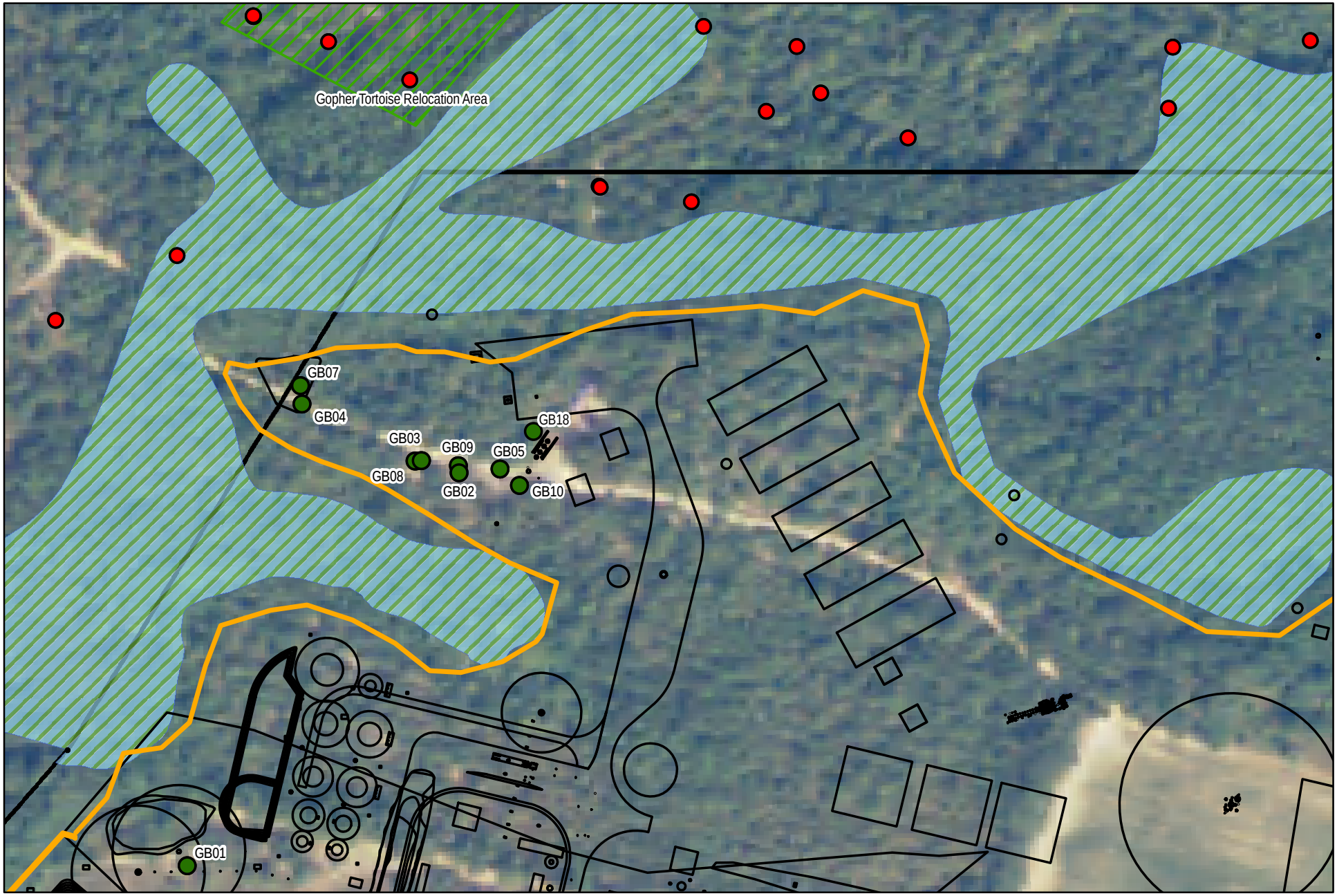

Gopher Tortoise Burrows
Gopher Tortoise Burrows Excavated and Collapsed
Gopher Tortoise Exclusion Fence
Gopher Tortoise Relocation Area

N

0 100 200 Feet

Gopher Tortoise Relocation Area Detail
Range Fuels Biofuels Facility
Soperton, Treutlen County, Georgia

CH2MHILL

File Path:\\boomer\G\projects2\RangeFuels\MXD\SPCC-20081117-detail.mxd, 11/20/2008, User: SSmith21

The projected noise levels originally described in the October 2007 EA included a log debarker, as this equipment is included in the typical installations producing the sound levels cited. Operations of the chipper and debarker would be limited to 16 to 18 hours per day and mitigation actions described for the chipper installation apply to the debarker as well. The October 2007 EA concluded that no impacts to either outdoor activity or indoor activity would result from operation of the proposed facility.

The two hammer mills would be fully enclosed and additional sound deadening material would be added if needed to minimize noise from their operations. Hammer mill operation with the woody materials planned as feedstocks for the facility would produce noise at levels lower than typical ambient facility operating noise levels.

The dryer installation contributes no significant noise and operates at a much lower noise level than other cited potential noise sources.

General sound level mitigation measures for the facility would include maintaining the surrounding forest acreage as a noise buffer for all operations. This buffer would remain as originally discussed in the October 2007 EA and provide significant noise attenuation beyond those mitigation measures previously discussed.

3.7 Air Quality

Proposed modifications to the process system would result in an increased potential to generate air emissions. Proposed new components include a log debarker and six chip dryers added to the process. In addition, the heat duty required of the conversion units has increased. All of these factors contribute to an increase in the potential to emit (PTE) for criteria pollutants and HAPs. RF Soperton proposes to maintain minor source status by augmenting the type and quantity of air pollution control equipment installed to control emissions.

There will be 6 new process baghouses for PM control, 9 selective catalytic reduction (SCR) units, utilizing urea, to control NOx, and 3 additional flares to control VOCs and HAPs. Catalytic oxidation has always been included for carbon monoxide (CO) control. The baghouses utilize polyester filter bags to filter or remove particulate matter suspended/ carried in a gas stream. SCR control devices inject a urea solution into the gas stream to allow urea to react with the NOx in the gas stream. The urea and NOx chemically react at elevated temperatures to convert/reduce the NOx to nitrogen and water. The resulting emissions for Phases 1, 2, and 3 are below the 100 tpy threshold value for triggering Prevention of Significant Determination (PSD). The initial permit issued by the Georgia EPD (Permit No. 2869-283-0005-S-01-0) and effective June 27, 2007 is being modified to reflect these process changes. The modification application was submitted to EPD November 19, 2008, and the permit is expected to be issued in February 2009. Any impacts from increases in the criteria pollutants would be negligible.

Tables 3-1 and 3-2 (below) show the new maximum PTE for both criteria pollutant and HAPs emissions, and Table 3-3 (below) shows the modeled AAC impacts from air toxics.

TABLE 3-1

MAXIMUM ANNUAL PTE CRITERIA POLLUTANT EMISSIONS (MAXIMUM OPERATION) FOR PHASE 1

RF SOPERTON EA

Pollutant	Annual Emissions (tpy)
$PM_{2.5}$	15.4
PM	29.1
NO_x	21.5
SO_x	3.8
CO	10.6
VOC	88.6
HAPs (total)	16.3
HAPs (individual)	all <10

TABLE 3-2

Maximum Annual (PTE) Criteria Pollutant Emissions (maximum operation) at Plant Completion

RF Soperton EA

Pollutant	Annual Emissions (tpy)
$PM_{2.5}$	64.2
PM	98.4
NO_x	95.5
SO_x	12.5
CO	91.6
OC	80.0
HAPs (total)	18.1
HAPs (individual)	all <10

TABLE 3-3

Air Toxics Impact Analysis

RF Soperton EA.

Pollutant	Emission Rate: Conversion Unit No. 1 (lb/hr)	Conversion Units No. 2 - 5 (lb/hr)	Flares No. 1 – 4 (lb/hr)	Utility Boilers No. 1 - 5 (lb/hr)	Tank Farm (lb/hr)	Total Emissions (lb/hr)	Averaging Period	Maximum Predicted Concentration (ug/m^3)	AAC* (ug/m^3)
Benzene	1.73E-04	3.24E-03	9.71E-04	1.87E-03	0.00E+00	6.25E-03	Annual	4.33E-04	1.30E-01
							15-minute	7.14E-03	1.60E+03
1,4 Dichlorobenzene	9.88E-05	1.85E-03	5.55E-04	1.07E-03	0.00E+00	3.57E-03	Annual	2.47E-04	8.00E+02
Formaldehyde	6.18E-03	1.16E-01	3.47E-02	6.69E-02	0.00E+00	2.23E-01	Annual	1.55E-02	8.00E-01
							15-minute	2.55E-01	2.45E+02
n-Hexane	1.89E-02	3.54E-01	8.33E-01	2.05E-01	0.00E+00	1.41E+00	Annual	1.20E-01	7.00E+02
							15-minute	1.99E+00	1.80E+05
Methanol	0.00E+00	0.00E+00	2.75E-01	0.00E+00	1.63E+00	1.90E+00	24-hour	4.71E+01	2.62E+03
							15-minute	1.56E+02	3.28E+04
Naphthalene	5.02E-05	9.40E-04	2.82E-04	5.44E-04	0.00E+00	1.82E-03	Annual	1.26E-04	3.00E+00
							15-minute	2.07E-03	7.50E+03
Toluene	2.80E-04	5.24E-03	1.57E-03	3.03E-03	0.00E+00	1.01E-02	Annual	7.01E-04	5.00E+03
							15-minute	1.16E-02	5.60E+04
Maximum Predicted Concentration from SCREEN3 Model (ug/m^3) (based on 1 gram/sec)	6.00	6.00	9.97	6.83	572.2				

*AAC for annual averaging period obtained from US EPA's Integrated Risk Information System Web Site. AAC for 24-hour and 15-minute averaging periods obtained from OSHA/NIOSH STELs (or ceiling limits).
µg/m3 = micrograms per cubic meter
hr = hour

3.8 Waste Management and Hazardous Materials

The denaturant used for ethanol production would shift from methanol to natural gasoline. The denaturant system at the proposed facility consists of a storage tank for the denaturant and metering equipment to add the denaturant to the ethanol product as it is being pumped into the product trucks. No changes would be made to this system due to a change in denaturant from methanol to natural gasoline. There would be no change in the handling of toxic or hazardous materials at the facility.

The natural gasoline would be obtained directly from production wells and would not be obtained as a refined petroleum product. This would not result in a change to the denaturant storage or handling system at the proposed facility, although there would be reduced flare-off of potential greenhouse gases at the production wells, thereby reducing an environmental waste.

The amount of ash and char generated during Phase 1 would decrease by approximately 10 tpd, resulting in a decrease in annual production from 17,500 tpy to 13,140 tpy. Rather than landfilling, the char and ash produced during Phase 1 would be sold as fuel. After completion of Phases 2 and 3, char would be combusted on-site, leaving approximately 123 tpd of ash (40,400 tpy), which would be sold for land application or other beneficial uses. This would require 6 to 7 trucks per day, an increase of 4 trucks per day over the amount reported in the October 2007 EA, and would have no impact on solid waste services in the area.

There would be no change in production of sludge at the wastewater treatment plant. This material and any char/ash that could not be sold would be disposed of in the Toombs County Landfill. The Toombs County Landfill has informed RF Soperton that their facilities can accommodate in excess of 20,000 tpy of solid wastes from RF Soperton without impacting their current operations or landfill life expectancy of 20 years (James Thompson, personal communication, 2007). Solid waste from char, ash, and wastewater sludge would not impact solid waste services in the area.

3.9 Transportation

No additional truck or rail traffic would result from the decreased production. The October 2007 EA evaluated a transport scenario sufficient to move the output projected at that time, which would be more than adequate to handle the reduced output. There would be no significant transportation impacts from the decreased level of production.

Minimal impacts to traffic would occur during operation of the RF Soperton Facility as a result of increased truck traffic to deliver feedstock. Truck traffic on State Route (SR) 15 would increase by 13 trucks in each direction per day, but decrease by 520 total truck deliveries over the course of the year due to lower plant availability and the resulting fewer total operating days per year.

Feedstock deliveries would be made to the Plant from 6:00 AM to 10:00 PM, Monday through Friday, and for half a day on Saturday. Truck traffic due to feedstock deliveries

would increase from 31.8 trucks per hour to 33.4 trucks per hour (1 truck every 1.8 minutes) during operation.

SR 15 is a lightly used roadway and the increase in traffic associated with the originally proposed RF Soperton facility would have brought road traffic from 7.97 percent up to 10.23 percent of its capacity. With the increased truck traffic proposed in this DSEA (including increased feedstock deliveries and char/ash removal), the roadway would be operating at 10.36 percent of its capacity, an increase of 0.13 percent over that calculated in the October 2007 EA (Table 3-4). SR 15 is well below existing capacity and the projected increase in traffic from the increased feedstock deliveries would remain well below the capacity of this road. The October 2007 EA concluded that increasing the traffic from 7.97 percent of capacity to 10.23 percent of capacity would have negligible impacts to traffic. Increasing truck traffic by an additional 0.13 percent (from 10.23 to 10.36 percent) would not introduce additional impacts to traffic. Any impacts to traffic would be negligible and would have no effect on traffic hazards and/or accidents.

TABLE 3-4
Analyses for Construction and Production Traffic at RF Soperton Facility
RF Soperton EA

Traffic Source	Production Traffic (Vehicles Per Day) on SR 15
Background (AADT)	2,040
Increase in Feedstock Delivery Trucks	26
Increase in Char and Ash Trucks	4
Percent Change	1.67%
Percent of Capacity Without Increased Feedstock Consumption	10.23%
Percent of Capacity With Increased Feedstock Consumption	10.36%

3.10 Aesthetics

There would be increased visibility of the chipper and the storage areas in the northeast portion of the facility with the additional land clearing. Persons traveling on Old Dairy Road would be able to see these components. However, traffic on the road is minimal and the number of potential viewers is small. No residential or recreational areas are within line-of-sight from any part of the facility. Any impacts to aesthetics from the additional clearing would be expected to be minor.

Georgia Power has completed construction of new 115 kV transmission lines and a new substation to supply energy to the RF Soperton facility. The substation is south of the proposed location of the cellulosic ethanol plant. The substation is visually compatible with the surrounding industrial park and any negative impacts in aesthetics are negligible. The

new transmission right-of-way (ROW) is adjacent to and parallels an older transmission ROW for much of its length, resulting in negligible change to viewers of the transmission line. The portion where forest was cleared for the right-of-way is immediately south of the industrial park where there are limited potential viewers. The impact of the new ROW on aesthetics in the area is minor.

3.12 Cumulative Impacts of the Proposed Action

The proposed changes in construction and operation would not result in a change to the Cumulative Impacts of the proposed action as described in the original EA. Please refer to the original EA for the discussion and analysis of cumulative impacts.

3.15 Short-Term Uses and Commitment of Resources

Federal agencies are required by NEPA to describe the relationship between local short-term uses of the environment and the maintenance and enhancement of long-term productivity. The NEPA evaluation should also characterize any irreversible and irretrievable commitments of resources as a result of the implementation of the modified Proposed Action.

The two resources that will be utilized by the Proposed Action are planted pine forested land and groundwater. The modified Proposed Action would not significantly change the annual amount of planted pine forested land required to provide feedstock to the plant. Water consumption needed for plant operations will not change from the amount proposed in the October 2007 EA.

4.0 References

General*Bioenergy. 2005. Biomass Wood Resource Assessment on a County-by-County Basis for the State of Georgia. Prepared for the Georgia Forestry Commission Macon, Georgia and the Southern States Energy Board Norcross, Georgia.

Hedrick, P.W. 1984. Population Biology. Jones and Bartlett Publishers. 445pp.

Ricklefs, R.E. 1990.Ecology, third edition. W.H. Freeman and Company. 896pp.

Robinson, W.L. and E.G. Bolen. 1984. Wildlife Ecology and Management. MacMillan Publishing Company. 478pp.

Thompson, James. 2007. Personal Communication. August 29, 2007.

U.S. Environmental Protection Agency (USEPA). 1974. Information Levels of Environmental Noise Requisite to Protect Public Health and Welfare with an Adequate Margin of Safety. USEPA/ONAC 550/9-74-004. March 1974.

Wickoff, Bill. 2008. Personal Communication. December 4, 2008.

Appendix A

Confirmation and Transfer of Mitigation Credits

Wilkinson Oconee, LLC
1305 Lakes Parkway
Suite 129
Lawrenceville, Georgia 30043

October 14, 2008

Range Fuels
926 Commerce Drive, Suite 101
Soperton, Georgia 30457

Subject: Reservation of Compensatory Wetland Mitigation Credits for a Project Located in Treutlen County, GA.
USACE Project #200800279

Dear Mr. Sir(s):

Wilkinson-Oconee Mitigation Bank (WOMB) has reserved 10.39 wetland credits for use as compensatory mitigation for a project located in Treutlen County, Georgia. The project is located within Hydrologic Unit Code 03070102. Your compensatory mitigation credits have been reserved at the price of $2,500.00 per wetland credit. The WOMB operates under U.S. Army Corps of Engineers Permit Number 200209480.

Final transfer of the credits will be made upon approval by the USACE and full receipt of your payment of $25,975.00 to Wilkinson Oconee, LLC, at which time a credit certification letter verifying your credit purchase will be issued to both you and the USACE. **Please send payment directly to Wilkinson Oconee, LLC at the letterhead address.** An invoice for this transaction has been attached for your convenience.

We appreciate the opportunity to assist you for your compensatory mitigation requirements. Please feel free to call me at 770-682-9731 if you have any questions or need any additional information.

Sincerely,

Gregory P. Smith
For Wilkinson Oconee, LLC

cc: Ms. Shruti Shah, CH2MHILL via Electronic Mail

Attachment

Paid 10/17/08
Check #1262

Invoice

Date	Invoice #
10/14/08	0060a

Bill To	Payable To
Range Fuels 926 Commerce Drive, Suite 101 Soperton, GA 30457	Wilkinson-Oconee, LLC 1305 Lakes Parkway Suite 129 Lawrenceville, Georgia 30043

P.O. No.	Terms	Wildlands Project
USACE #200800279	Reserved – Price Valid for 15 Days	2052-03 Wilkinson-Oconee Mitigation Bank

Line Item	Description	Quantity	Unit Price	Amount
01	Wetland Mitigation Credits	10.39	2,500	25,975.00
		Total		**$25,975.00**

10-16-08
PER BEN GARDNER
CHARGE:
WBS: GA5P0801.92.921.027A
RANGE FUELS SOPERTON PLANT, LLC
$25,975.00

See attached sheet for approvals

R. Nof

Appendix B

Gopher Tortoise Correspondence

Gopher Tortoise Onsite Relocation Protocol – Range Fuels, Soperton, GA Site

PREPARED FOR: CH2M HILL - CM Team

PREPARED BY: Andrew T. Champagne

COPIES: CH2M HILL - CM Sub Contractors
Range Fuels

DATE: March 21, 2008

If a gopher tortoise is found on the construction site within the disturbed area silt fence or anywhere else on the construction site:

- Protect the tortoise from ongoing construction activity.
- Place the tortoise, with gloves on, carefully into a bucket or box for transport.
- Take tortoise to relocation area, See Attached Map (try to determine the area the tortoise most likely came from, and return to that area).
- Place tortoise anywhere within designated relocation area, again with gloves on. If it cannot be determined which burrow the tortoise belongs in (tortoise burrows match the size of the tortoise) attempt to find an unused burrow and place the tortoise in that burrow so that it will be afforded protection from weather and predators.
- Monitor the tortoise. It probably will not stay in the burrow in which it was placed if it is just a substitute burrow and will attempt to return to its own burrow.
- Try to determine where the tortoise got through the silt fence barrier and repair any breaches.

Any questions, please call Drew Champagne-CH2M HILL @ 678.530.4068

COPYRIGHT 2008 BY CH2M HILL, INC. • COMPANY CONFIDENTIAL

CH2M HILL
Northpark 400
1000 Abernathy Road
Suite 1600
Atlanta, GA
30328
Tel 770.604.9095
Fax 770.604.9183

October 3, 2008

John Jensen
Georgia Department of Natural Resources
Nongame & Endangered Wildlife Program
116 Rum Creek Drive
Forsyth, GA 31029

Re: Range Fuels Gopher Tortoise Relocation Summary Report

Dear Mr. Jensen:

CH2M HILL has concluded its relocation efforts of state threatened gopher tortoises (*Gopherus polyphemus*) at the Range Fuels Soperton Plant, located at 721 Commerce Drive, Soperton Georgia. A total of ten gopher tortoise burrows were identified during surveys as potentially being inhabited by tortoises. CH2M HILL biologists documented these burrow locations using GPS technology and examined each for signs of tortoise activity. Prior to capture and relocation of the tortoises, Range Fuels erected a silt fence exclusion barrier around its construction area to prevent return of relocated tortoises to their original burrow locations. Pitfall traps were set at the entrances of each potentially active adult burrow, and three adult tortoises were captured in these traps. One hatchling age tortoise was captured by hand digging its burrow, and four others were hand captured outside their burrows. Several viable eggs were located at the site and removed to the north end of the Range Fuels property, without rotation, and buried in a suitable alternative site. Three hatchling age tortoises were discovered dead during the relocation process. After an extended period of non-activity, the traps were removed from the burrows on September 30th, each burrow was examined with an infrared camera, dug to its terminus to confirm that it was unoccupied, and then collapsed. A summary report, map showing original burrow locations, and photos of captured tortoises are provided as attachments to this correspondence. Range Fuels will continue to monitor its Soperton Plant site throughout the construction process to prevent harm to gopher tortoises and other protected wildlife species. If you have any questions about these activities, please feel free to contact me at (678) 530-4350 or at dthomas9@ch2m.com.

Sincerely,

CH2M HILL

Range Fuels Gopher Tortoise Summary				
Burrow Site ID	**Burrow Entrance Direction (Degrees)**	**Trapping/Relocation Required (Y/N)**	**Comment**	**Final Result**
Burrows Requiring Trapping/Relocation				
GB03	303	Yes	Possibly abandoned-inconclusive.	Burrow showed signs of activity during subsequent field visit. Nest found at burrow apron with 6 eggs – hatchlings emerging. Eggs relocated. Trap set/burrow monitored through Sept. 30, then dug to terminus and collapsed. No tortoise captured. **Additional eggs (2) discovered during monitoring in apron mound (possibly exposed by rainwater) and relocated. Three hatchlings discovered dead in pit adjacent to pitfall trap.
GB3A		Yes	Juvenile burrow – tortoise relocated	Burrow hand dug.
GB3B		N/A	No burrow. Juvenile tortoise found wandering – relocated.	No further action.
GB05	N/A	Yes	Active Adult Burrow – GT captured 8/27/08	Trap set. Burrow monitored through Sept. 30, then dug to terminus and collapsed.
GB5A		Yes	Juvenile GT captured and relocated but will still require monitoring and possible trapping in case it returns or another juvenile utilizes it.	Burrow area monitored through trapping effort. Second juvenile excavated from burrow on 9/8/08 and relocated.

GB07	129	Yes	Inactive Adult Burrow – GT captured 8/27/08	Nest found at burrow apron with 4 eggs. Two eggs destroyed during excavation process – remaining eggs relocated. Trap set . Burrow monitored through Sept. 30, then dug to terminus and collapsed.
GB08	93	Yes	Fresh Prints.	Trap set. Burrow monitored through Sept. 30 then dug to terminus and collapsed. No tortoise captured.
GB09	244	Yes	Fresh Prints.	Trap set. Burrow monitored through Sept. 30 then dug to terminus and collapsed. No tortoise captured.
GB10	349	Yes	Active Adult Burrow – GT captured 8/27/08	Trap set. Burrow monitored through Sept. 30 then dug to terminus and collapsed.
GB10A		Yes	Juvenile burrow	Excavated 9/03. Tortoise captured and released to relocation area on north side of property.
GB18		Yes	Active burrow near hunter camp	Trap set. Burrow monitored through Sept. 30, then dug to terminus and collapsed. No tortoise captured.
Burrows NOT Requiring Trapping/Relocation				
New Burrow	N/A	No	Only 2-feet deep, no concerns.	No further action.
GB01	263	Yes	Not Very Active.	Sticks placed at entrance and monitored. No activity detected throughout monitoring period. Mushrooms noted growing in burrow.
GB04	N/A	No	Only 1-foot deep, no concerns.	No further action.
GB06	N/A	No	Possibly Active but will be excluded by	No further action.

			exclusion fence.	
GB02	N/A	No	Nomenclature Mistake. Artifact from original survey.	No further action.
GB11	79	Yes	Inactive Adult Burrow	No further action.
GB12	N/A	No	No Burrow identified or determined not to be a GT burrow during the follow-up survey.	No further action.
GB13	N/A	No	No Burrow identified or determined not to be a GT burrow during the follow-up survey.	No further action.
GB14	N/A	No	No Burrow identified or determined not to be a GT burrow during the follow-up survey.	No further action.
GB15	N/A	No	No Burrow identified or determined not to be a GT burrow during the follow-up survey.	No further action.
GB16	N/A	No	No Burrow identified or determined not to be a GT burrow during the follow-up survey.	No further action.
GB17	N/A	No	No Burrow	No further action.

			identified or determined not to be a GT burrow during the follow-up survey.	

Summary: It was determined that 10 burrows located on site required further monitoring. All of these burrows were located along an existing dirt access road in a mixed pine-hardwood area. Pitfall traps were set at seven burrows. Three adult tortoises were captured and relocated. Five juveniles were hand captured and relocated. Three hatchlings were found dead. A total of twelve eggs were discovered, and ten were successfully relocated. To date, there is evidence that five of the relocated eggs have successfully hatched.

On September 30, after a period of daily monitoring with no further evidence of tortoise activity, the burrows were excavated using a backhoe. An attempt was made to scope each burrow to its terminus with a burrow camera prior to excavation. Most scoping efforts were only partially successful due to shallow roots and other obstructions. Soils in the area were sandy, but it was discovered during burrow excavation that a hardpan layer existed about two feet below the surface, probably making excavation difficult for tortoises. Subsequently, the burrows were relatively shallow, and meandered extensively to a terminus 4-5 feet below the surface. Toads (*Bufo terrestris*) were found in two of the burrows excavated.

Appendix C

State of Georgia
Department of Natural Resources
Section 401 Water Quality Certification

Georgia Department of Natural Resources

2 Martin Luther King, Jr. Drive, S.E., Suite 1152 East Tower, Atlanta, Georgia 30334-9000
Noel Holcomb, Commissioner
Carol A. Couch, Ph.D., Director
Environmental Protection Division
404/656-4713

November 17, 2008

Mr. Tom Levensailor
Range Fuels Soperton Plant, LLC
926 Commerce Drive
Suite 101
Soperton, Georgia 30457

Re: Water Quality Certification
Joint Public Notice 200800279
Cellulosic Ethanol Plant
Oconee River Basin
Truetlen County

Dear Mr. Levensailor:

Pursuant to Section 401 of the Federal Clean Water Act, the State of Georgia issues this certification to Range Fuels Ethanol Plant, LLC, an applicant for a federal permit or license to conduct an activity in, on or adjacent to the waters of the State of Georgia.

The State of Georgia certifies that there is no applicable provision of Section 301; no limitation under Section 302; no standard under Section 306; and no standard under Section 307, for the applicant's activity. The State of Georgia certifies that the applicant's activity will comply with all applicable provisions of Section 303.

This certification is contingent upon the following conditions:

1. All work performed during construction will be done in a manner so as not to violate applicable water quality standards.

2. No oils, grease, materials or other pollutants will be discharged from the construction activities which reach public waters.

This certification does not relieve the applicant of any obligation or responsibility for complying with the provisions of any other laws or regulations of other federal, state or local authorities.

It is your responsibility to submit this certification to the appropriate federal agency.

Sincerely,

Carol A. Couch
Director

CAC:kp

cc: Mr. Anthony Jernigan
Ms. Carol Bernstein
Mr. Bob Lord
Mr. Strant Colwell
Mr. Shruti Shah