PNNL-13879

Pacific Northwest National Laboratory
Operated by Battelle for the U.S. Department of Energy

New Technology Demonstration Program

# Technology Demonstration of Magnetically-Coupled Adjustable Speed Drive Systems

W. D. Chvála, Jr.
D. W. Winiarski
M. C. Mulkerin

June 2002

Prepared for the
U.S. Department of Energy
Office of Energy Efficiency and Renewable Energy
Federal Energy Management Program
under Contract DE-AC06-76RL01830

**DISCLAIMER**

This report was prepared as an account of work sponsored by an agency of the United States Government. Neither the United States Government nor any agency thereof, nor Battelle Memorial Institute, nor any of their employees, makes **any warranty, express or implied, or assumes any legal liability or responsibility for the accuracy, completeness, or usefulness of any information, apparatus, product, or process disclosed, or represents that its use would not infringe privately owned rights**. Reference herein to any specific commercial product, process, or service by trade name, trademark, manufacturer, or otherwise does not necessarily constitute or imply its endorsement, recommendation, or favoring by the United States Government or any agency thereof, or Battelle Memorial Institute. The views and opinions of authors expressed herein do not necessarily state or reflect those of the United States Government or any agency thereof.

PACIFIC NORTHWEST NATIONAL LABORATORY
*operated by*
BATTELLE
*for the*
UNITED STATES DEPARTMENT OF ENERGY
*under Contract DE-AC06-76RL01830*

**Printed in the United States of America**

**Available to DOE and DOE contractors from the**
**Office of Scientific and Technical Information,**
**P.O. Box 62, Oak Ridge, TN 37831-0062;**
**ph: (865) 576-8401**
**fax: (865) 576-5728**
**email: reports@adonis.osti.gov**

**Available to the public from the National Technical Information Service,**
**U.S. Department of Commerce, 5285 Port Royal Rd., Springfield, VA 22161**
**ph: (800) 553-6847**
**fax: (703) 605-6900**
**email: orders@ntis.fedworld.gov**
**online ordering: http://www.ntis.gov/ordering.htm**

This document was printed on recycled paper.
(8/00)

PNNL-13879

New Technology Demonstration Program

# Technology Demonstration of Magnetically-Coupled Adjustable Speed Drive Systems

W. D. Chvála, Jr.
D. W. Winiarski
M. C. Mulkerin

June 2002

Prepared for the
U.S. Department of Energy
Office of Energy Efficiency and Renewable Energy
Federal Energy Management Program
under Contract DE-AC06-76RL01830

Pacific Northwest National Laboratory
Richland, Washington 99352

# Preface

The mission of the U.S. Department of Energy's Federal Energy Management Program (FEMP) is to reduce the cost of government by advancing energy efficiency and water conservation, promoting the use of distributed and renewable energy, and improving utility management decisions at Federal sites. This is accomplished by creating partnerships, leveraging resources, transferring technology, and providing training and technical guidance and assistance to Federal agencies. These activities support Executive Orders 13123, 13221, and other Executive Orders and Presidential Directives and relevant laws (see http://www.eren.doe.gov/femp/resources/legislation.html). The Pacific Northwest National Laboratory (PNNL)[(a)] supports the FEMP mission in all activity areas.

FEMP's New Technology Demonstration Program was established in 1990 to fulfill three goals:

1. Reduce Federal-sector costs and improve overall energy efficiency.

2. Accelerate Federal adoption of new and emerging energy-efficient technologies, including water conservation, solar and other renewable-energy technologies, and improve the rate of technology transfer.

3. Help Federal facilities implement pollution prevention strategies and reduce operations and maintenance costs.

For more information on the New Technology Demonstration Program, visit FEMP's Web site at: http://www.eren.doe.gov/femp/prodtech/newtechdemo.html.

This document presents the findings of a technology demonstration for magnetically-coupled adjustable speed drives. Although many devices can provide speed control in motor systems, the two devices evaluated were chosen for their unique packaging for specific applications. The U.S. Department of Energy and Pacific Northwest National Laboratory do not specifically endorse or sponsor the devices or manufacturers described in this study, other than to present the specific data collected during this study. The goal of this document is to report the test results of two uniquely packaged devices and evaluate whether these devices could cost-effectively produce energy savings in Federal facilities.

---

(a) Pacific Northwest National Laboratory (PNNL) is operated by Battelle for the U.S. Department of Energy under Contract DE-AC06-76RL01830.

# Summary

Most large electric motors run at a nearly constant speed, although the devices they drive – particularly pumps, fans, or blowers – are often used to meet loads that vary over time. Adjustable speed drive (ASD) technologies have the ability to precisely control output speed and produce a number of benefits including energy and demand savings. This report deals with a specific class of ASDs called magnetically-coupled adjustable speed drives (MC-ASDs) and examines their performance and cost-effectiveness with a more common ASD device, the electronic variable frequency drive (VFD).

The MC-ASDs are couplings that mount between the motor and the load shaft allowing control of the output speed to better respond to system load. Within the coupling, the strength of the magnetic field controls the amount of torque transferred between motor and drive shaft and thus the eventual speed of the drive shaft. Two specific MC-ASDs were examined using manufacturers' case studies and laboratory testing. The MagnaDrive Adjustable Speed Coupling System uses fixed rare-earth magnets, which control the amount of torque transferred by varying the distance between rotating plates in the assembly. This design appears best suited for direct-drive loads on medium to very large size motors, 50 horsepower and above. The PAYBACK Variable Speed Drive from Coyote Electronics uses an electromagnet to control the speed of the drive; aspects of this design make it ideal for belt-driven loads.

The laboratory testing was carried out for three different load profiles: fan, low head pump, and high head pump. The testing consistently showed that in the upper speed range (80 to 100% of full speed) the MC-ASD efficiency was typically between 2% and 4% less than a comparable VFD. However, in the lower speed range (less than 50%), the VFD was substantially more efficient, often using less than half of the energy of the MC-ASDs.

A life-cycle cost analysis was performed using a 50-hp fan retrofit as an example. In this analysis, the VFD produced the most energy savings using 41,013 kWh/yr compared to 109,133 kWh/yr for the constant-speed base case. Assuming $0.06 per kilowatt-hour with no demand charges produced a simple payback of 2.4 years. The PAYBACK Drive, however, had the best simple payback at 1.9 years because of its low purchase and installation costs. The MagnaDrive, which has the highest initial cost, produced a simple payback of 4.6 years. Because of a lack of data, long-term operations and maintenance costs were not considered in the analysis. This definitely skews the comparison because technologies like MC-ASD are designed with reduced maintenance costs in mind. Based on this example, any of the options would provide a cost-effective retrofit. Other factors, such as design differences and available unit sizes, will likely drive the choice of which ASD is suitable for each specific application.

In addition to energy savings, speed control devices may offer other benefits including motor soft start and, depending on the application, the potential for motor downsizing. When specifically compared to VFDs, the MC-ASDs have greater tolerance for motor misalignment, have little impact on power quality, can be used with regular (as opposed to inverter) duty motors, and can be used in both medium/high voltage motor applications as well as engine-driven applications. The MC-ASDs are easy

to install in both new construction and retrofit applications. Because of the simplicity and mechanical nature of the design, MC-ASDs may ultimately prove more durable, with potential benefits in long-term maintenance costs.

Based on the results of this study, the MC-ASD technology shows good potential for application in Federal facilities and should be considered along with traditional speed-control technologies when evaluating energy options.

# Acknowledgments

The authors of this report would like to acknowledge the following people for their assistance in making this project possible. Alan Wallace, Andre Ramme, and Annette von Jouanne from the Motor Systems Resource Facility (MSRF) at Oregon State University performed the laboratory testing under controlled conditions. Jane Cicala and Ken Black of MagnaDrive Corporation and Dewey Boggs of Coyote Electronics, Inc. provided technical product information, case study material, and review of testing results for this task. Both MagnaDrive Corporation and Coyote Electronics, Inc. provided their equipment and shipping to the test site at no cost to the project.

# Contents

**Preface** ..... **iii**

**Summary** ..... **v**

**Acknowledgments** ..... **vii**

**About the Technology** ..... **1**

Application Domain ..... 1

Energy Saving Mechanism ..... 2

Other Benefits ..... 3

Variations ..... 4

Fixed Magnet MC-ASD ..... 4

Electromagnet MC-ASD ..... 6

Installation ..... 10

**Federal Sector Potential** ..... **13**

Laboratory Perspective ..... 13

**Application** ..... **15**

Application Screening ..... 15

Where to Apply ..... 15

What to Avoid ..... 16

Equipment Integration ..... 16

Maintenance Impact ..... 16

Equipment Warranties ..... 17

Codes and Standards ..... 17

Costs ..... 18

Utility Incentives and Support ..... 19

Additional Considerations ..... 19

**Field Performance** ..... **21**

HVAC Blower Application – PAYBACK Drive ..... 21

HVAC Pumping Application – MagnaDrive Coupling ..... 21

**Laboratory Testing** ..... **23**

Facility Description ..... 23
Test Procedure ..... 23
Test Results: Fan Load Profile ..... 25
Test Results: Low Head Pump Application ..... 30
Test Results: High Head Pump Application ..... 32
Power Factor ..... 33
Motor Bearing Temperature ..... 33
Motor Winding Temperature ..... 34
Conclusion ..... 35

**Savings Potential ..... 37**
Life-Cycle Cost ..... 37
Life-Cycle Results for Fan Application ..... 38
MC-ASD for Pump Applications ..... 39

**The Technology in Perspective ..... 41**

**Additional Information ..... 43**
References ..... 43
Manufacturers ..... 43
Who is Using the Technology ..... 44
Federal Sites ..... 44
Other Government Sites ..... 44
For Further Information ..... 45
Federal Program Contacts ..... 45
User and Third Party Field and Lab Test Reports ..... 45
Awards ..... 45
Design and Installation Guides ..... 45
Technology Specification Sample ..... 45
Tools ..... 46
ASDMaster ..... 46
QuickFan ..... 46

**Appendix A – Adjustable Speed Drive and Test Data ..... A-1**
**Appendix B – Energy Use Simulations for ASDs ..... B-1**
**Appendix C – Federal Life-Cycle Costing Procedures and the BLCC Software ..... C-1**

# Figures


1 MagnaDrive Schematic ..... 5
2 Photo of MagnaDrive Coupling with Protective Shroud Removed ..... 6
3 Schematic of PAYBACK Drive ..... 8
4 Photo of PAYBACK Drive and Motor System ..... 8
5 PAYBACK Drive in Direct-Drive Configuration ..... 9
6 Testing Equipment Schematic ..... 24
7 Power Consumption Over Range of Speed for Fan Load ..... 25
8 Fan Motor and Drive Efficiency as a Function of Shaft Power ..... 27
9 PAYBACK Drive Electromagnet Power Consumption versus Fan Speed ..... 28
10 System Efficiency versus Slip Between Input and Output Shafts ..... 30
11 Low Head Pump Drive Power Consumption and Pump Shaft Power Curve ..... 31
12 High Head Pump Drive Power Consumption and Pump Shaft Power Curve ..... 32
13 Reactive Power Generated by All VSDs During Fan Curve Test ..... 34
14 Motor Bearing Temperatures for Fan Test ..... 35


# Tables


1 Affinity Law Examples ..... 2
2 MagnaDrive Model Description ..... 5
3 MagnaDrive Model Selection ..... 7
4 PAYBACK Drive Model Description ..... 9
5 MC-ASD Standard Cost Sheets for 2002 ..... 18
6 Fan Profile BLCC Analysis ..... 38

# About the Technology

Most large electric motors run at a nearly constant speed. The devices they drive however, particularly pumps, fans, or blowers, are often used to meet loads that vary over time. These loads could be met by operating the motor at less than full speed a large portion of the time. Commonly, the flow rate of a fan or pump system is regulated by partially closing a valve or damper in the system (throttling) or allowing some of the flow to go through a bypass loop. Although an effective control, these methods are inefficient in terms of energy consumption by the motor. Instead of restricting or bypassing the flow with a valve or damper, varying the speed of the input shaft can provide the required control, while reducing energy use. Varying the speed of the motor shaft is most commonly done using an adjustable speed motor drive.

Adjustable speed drive (ASD) technologies come in two forms: 1) those that cause the motor to rotate at varying speeds, and 2) those that act as a clutch to introduce some "slip" in the system, allowing the output drive speed to be variable while motor speed remains constant. ASDs of the first type have traditionally been dominated by the variable frequency drive (VFD) technology, which uses sophisticated electronics to sense the load on the motor and varies the frequency of the alternating current input to the motor. The result is a motor that turns at different speeds according to the input. A number of different product types fall into the second category of ASDs utilizing variable diameter pulleys, mechanical clutches and magnetic coupling. For each of these technologies, the motor speed remains constant and the speed of the output of the motor drive shaft is adjustable.

The magnetically-coupled adjustable speed drive (MC-ASD) uses a coupling attached to the motor shaft to adjust the amount of torque transferred to, and thus the speed of, the drive shaft. A magnetic field transmits torque across an air gap between the motor shaft and the driven side of the coupling. By varying the magnetic field strength, the amount of torque transmitted can be controlled, thus providing speed control while the motor speed remains constant. By definition, any coupling that uses eddy currents induced by a magnetic field (from either fixed or electromagnets) to transfer torque from motor shaft to load can be considered an MC-ASD. This demonstration focuses on two unique applications of the MC-ASD technology – a fixed magnet coupling and a uniquely packaged eddy current (electromagnetic) coupling.

## Application Domain

The MC-ASD is generally suitable for application anywhere an ASD could be applied. The most common applications for ASDs are pumps, fans, and blowers to balance flows and meet changing system needs. In addition, ASDs may be used on other loads such as elevators, cooling towers, air compressors, cranes, and conveyors.

Motor loads can be divided into three categories: variable torque, constant torque, and constant horsepower. In variable torque systems, the load is commonly the need to move a fluid (which by definition includes air, water, or other liquids) using a pump, fan, or blower. In these applications, the

motor torque increases with flow rate. In constant torque systems, the load requires the same amount of torque throughout the speed range. For example, conveyor systems must overcome the same forces (weight or friction) at low or high speeds. Finally, variable speed constant horsepower systems are found with lathes, winders, and some metal cutting tools where diameters change during operation. As the diameters decrease, so does torque, but the speed increases to provide a constant surface speed.

Variable-torque loads provide the best application for ASDs, providing both energy savings and better process control. In general, all large loads with throttled output or bypass loop operation to control flow velocity or pressure should be evaluated for ASD retrofit. To be cost-effective, the motor/load system should have significant operation (hours) at less than rated output.

## Energy Saving Mechanism

ASDs can save substantial energy when applied to variable-torque loads, such as fans, blowers, most centrifugal and axial pumps, and many mixers and agitators. These loads require much lower torque at low speeds than at high speeds. All fluid flow is governed by the Affinity Laws, whose equations describe pressure differences and fluid flow in closed systems. Although a detailed discussion of the Affinity Laws (also called "Fan Laws") is beyond the scope of this report, the equations derived from the Affinity Laws show the relationship between speed, torque, and power.

The Affinity Laws state that, for a fixed system, the torque of the motor varies in proportion to the square of the speed of the fluid flow. In addition, the horsepower (work input) varies in proportion to the cube of speed. This cubic relationship between speed and input power is where energy savings is realized. For example, if fan speed is reduced by 20%, motor horsepower (and therefore energy consumption) is reduced by nearly 50% (see Table 1). The ability to control fan speed is important because even small reductions in speed will have a sizable impact on input power.

**Table 1**. Affinity Law Examples

| **Speed %** | **Torque $T \propto Spd^2$ %** | **Horsepower $HP \propto Spd^3$ %** |
|---|---|---|
| 100 | 100 | 100 |
| 80 | 64 | 51 |
| 50 | 25 | 12 |

The control mechanism in most cases will produce savings less than predicted by the Affinity Laws. In most practical systems, flow is not directly measured. Rather, a valve or damper is used to restrict total flow to an end use. The closure of this valve increases the pressure in the upstream pipe or duct, which is sensed by a pressure sensor in the system. The pressure sensor in turn sends a signal to the pump or fan to reduce speed, which reduces system pressure accordingly. The combined effect is to maintain the pressure at some set value. For a system where the pressure at the fan or pump is held constant, the horsepower requirements generally vary according to the square of the speed. However, strategies that reset the duct pressure based on other measured variables can provide close to the cubic relationship between power and flow described by the Affinity Laws.

In a theoretical sense, the energy savings mechanism for all ASDs is the same and should provide similar levels of brake horsepower savings at the fan or pump. In reality, inefficiencies in different speed

control technologies introduce losses, resulting in different levels of motor input power savings. The purpose of this demonstration is to quantify the unique performance of three individual speed control technologies: a VFD and two unique MC-ASDs in a controlled laboratory environment.

## Other Benefits

The MC-ASD systems can offer other benefits resulting from speed control in addition to energy savings. When compared to a motor system with no speed control, the MC-ASD and most VFD systems can offer benefits in the following areas:

- Reduced vibrations – Systems where flow is controlled by throttling with a valve or damper often have vibration problems from turbulent flow, cavitation, water hammer, etc. Frequently, these vibrations worsen over time, adversely affecting other equipment in the system. Installing an ASD and removing the valve or damper currently controlling the system, substantially reduces vibrations.

- Soft start – A method of slowly starting a motor to reduce initial in-rush current and prevent a lowering of distribution system supply voltage. The design of the coupling allows the motor to slip during start-up, reducing starting current.

- Smaller motor sizes – If a motor in a particular application is oversized for large starting loads or shock absorption of instantaneous peak loads, it can often be downsized. These events will not damage the motor because the air gap allows more slip at these times protecting the motor.

- Retrofit ready – The MC-ASDs (and most VFDs) can be easily implemented in retrofits as well as new construction.

In addition to these benefits, the MC-ASD systems provide the following additional benefits, which are not found in electronically controlled ASDs (e.g., VFDs).

- Misalignment – In the one type of MC-ASD, the presence of an air gap in the coupling between the motor shaft and driven shaft will eliminate certain vibrations caused by motor misalignment (see MagnaDrive discussion later).

- Power quality – A potential benefit of MC-ASDs is that they introduce an insignificant amount of harmonic distortion to the power grid. This is in contrast to the VFD technology, which can create problems with harmonic distortion produced by the electronic components used to vary the AC current frequency to the motor. MC-ASDs generally also react better to poor existing power quality. For instance, MC-ASDs will not stop working, like VFDs may do, during voltage sags.

- Motor cooling – Motors are cooled by internal fans that spin at motor speed. When a VFD slows down a motor, it also reduces cooling. If a motor operates at low speed for a period of time, the heat could potentially damage the motor's internal windings unless auxiliary cooling is applied. Using MC-ASDs, a motor always operates at full speed regardless of output speed.

- Motor costs – VFDs may also require inverter-duty motors because of the harmonics and associated voltage spikes generated in the power input. These motors can cost 30% more than standard, high-efficiency motors.

- Maintenance – Because MC-ASDs are primarily simple mechanical devices; they are more easily serviced, repaired, or replaced by on-site staff. Repair of VFD equipment sometimes requires a factory-trained technician to troubleshoot and repair.

- Alternative applications – The MC-ASDs can be used in non-electric applications, such as engine-driven irrigation pumps. The MagnaDrive™ Coupling doesn't require electric power outside of the controller and the PAYBACK® Drive has an option to self generate the needed power (see Variations section for more details).

## Variations

The MC-ASD technology can be divided into two types: fixed magnet and electromagnet. Important design differences will be discussed in this section. Although other MC-ASD drives are available (e.g., floor mounted eddy-current clutches), this demonstration focused on two unique applications of the MC-ASD technology: The MagnaDrive™ Adjustable Speed Coupling System marketed by MagnaDrive, Inc, and the PAYBACK® Variable Speed Drive, marketed by Coyote Electronics.

**Fixed Magnet MC-ASD**

The fixed magnet MC-ASD is licensed solely to MagnaDrive, Inc. and marketed as the MagnaDrive™ Adjustable Speed Coupling System. For the purposes of this document, it will be referred to as the MagnaDrive Coupling. It is available in horizontal and vertical mounted designs. Sizes are based on torque requirements rather than horsepower ratings, while VFDs are sized on power output. Drives are named by their size and will handle peak torque ranging from 2,270 to 13,300 lb-in., depending on the model chosen (see Table 2).

The MagnaDrive Coupling is a fixed magnet MC-ASD. This design uses permanent rare-earth magnets fixed to a rotating disk to generate eddy currents in a copper conductor assembly fixed to the load shaft. The magnetic interaction between the rotating rare-earth magnets and the magnetic fields generated by the eddy currents transfers torque from the rotating motor shaft across an air gap to the load shaft. This torque causes the load shaft to rotate. By mechanically varying the distance between the magnet rotor assembly and the conductor assembly, the amount of torque produced on the load shaft can be varied.

**Table 2**. MagnaDrive Model Description

| Model/Size | Diameter (in.) | Length (in.) | Peak Torque (lb-in.) | Motor Shaft Weight (lb) | Load Shaft Weight (lb) |
|---|---|---|---|---|---|
| 8.5 | 10.0 | 12.0 | 1,200 | 20 | 35 |
| 10.5 | 13.5 | 16.6 | 1,604 | 46 | 80 |
| 12.5 | 16.0 | 16.9 | 2,750 | 63 | 93 |
| 14.5 | 18.0 | 17.1 | 4,200 | 81 | 118 |
| 16.5 | 20.0 | 19.5 | 5,628 | 118 | 170 |
| 18.5 | 22.0 | 19.5 | 8,016 | 125 | 188 |
| 20.5 | 24.0 | 19.5 | 10,390 | 163 | 212 |
| 22.5 | 26.0 | 24.0 | 13,068 | 190 | 350 |
| 24.5 | 28.0 | 28.8 | 16,044 | 230 | 450 |
| 26.5 | 30.0 | 28.8 | 19,320 | 247 | 498 |

A schematic of the rotating assembly is shown in Figure 1. The copper conductor assembly and all related parts are shown as a crosshatch pattern and rotate at motor speed. The magnet rotor assembly parts are shown in gray shading. These parts are bolted to and rotate with the load shaft. A photo of an actual installation is shown in Figure 2 with the protective shroud removed for illustration purposes.

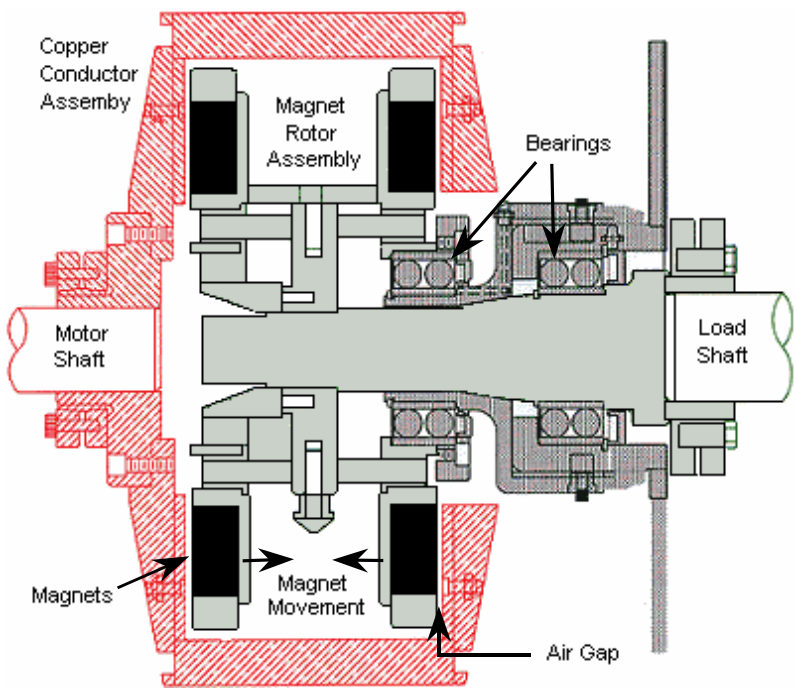


**Figure 1**. MagnaDrive Schematic

**Figure 2**. Photo of MagnaDrive Coupling with Protective Shroud Removed

The fixed magnet MC-ASD is controlled by an actuator, which allows a process control signal to mechanically vary the air gap and thus modulate the speed or torque output of the coupling. Both pneumatic actuators (using 100 psi instrument air) and electronic actuators (using 110 VAC power) are available to control the coupling. Either actuator accepts input signals of 4 to 20 milliamp, 1 to 5 volts DC, 0 to 10 volts DC, and other typical control signals. A manual coupling control is also available by special order for systems where automatic process control is not appropriate. The fixed magnet MC-ASD can also provide speed control for non-electric applications, such as an engine-driven irrigation pump and can be controlled either manually or using a controller.

The MagnaDrive Coupling is not limited only to 1800-rpm synchronous motors, but can be applied to any speed motors. Table 3 shows the model selection for each size motor (shown in horsepower because nominal speed is explicitly given).

Because the coupling produces 1 to 4% slip, the speeds shown are slightly less than full motor speed. For example, a 100-hp motor operating at 1800 rpm would require model 14.5. The MagnaDrive technical staff will help ensure that the right model is selected for the application.

**Electromagnet MC-ASD**

The PAYBACK Variable Speed Drive is an electromagnetic MC-ASD, which uses electromagnets to transfer torque across a fixed-width air gap. Changing the current supplied to the permanent electro-magnets in the assembly varies the magnetic field and the amount of torque transferred. For the purposes of this document, it will be referred to as the PAYBACK Drive.

**Table 3**. MagnaDrive Model Selection

| Motor Size, hp | Model Required by Nominal Motor Speed | | | |
|---|---|---|---|---|
| | **885 rpm** | **1160 rpm** | **1750 rpm** | **3550 rpm** |
| 25 | 12.5 | 12.5 | 10.5 | 8.5 |
| 50 | 16.5 | 14.5 | 12.5 | 10.5 |
| 75 | 18.5 | 16.5 | 14.5 | 10.5 |
| 100 | 20.5 | 16.5 | 14.5 | 12.5 |
| 125 | 22.5 | 18.5 | 16.5 | 12.5 |
| 150 | 22.5 | 20.5 | 18.5 | 14.5 |
| 175 | 24.5 | 22.5 | 18.5 | 14.5 |
| 200 | 26.5* | 22.5 | 18.5 | 14.5 |
| 250 | * | 24.5 | 20.5 | 16.5 |
| 300 | * | 26.5 | 22.5 | 16.5 |
| 350 | * | * | 22.5 | 18.5 |
| 400 | * | * | 24.5* | 18.5 |
| 450 | * | * | 24.5* | 20.5 |
| 500 | * | * | 26.5* | 20.5 |

* Contact manufacturer for recommendation.

The PAYBACK Drive is an MC-ASD that comes in a unique package design. The internal drive assembly clamps to the motor shaft and rotates at motor speed. The casing of the drive coupling rotates separately on a bearing between the casing and the internal drive assembly. Drive belt grooves are integrated into the casing. A schematic of the internal drive and case assembly is shown in Figure 3. A photo of a motor-drive assembly is shown in Figure 4 with a protective shroud in place surrounding the entire assembly.

In its basic form, this coupling is designed for use on a belt-driven load. It can also be used in a direct-drive system by purchasing an assembly that connects the belts to a shaft assembly, which in turn can be directly connected to any direct-driven load. Figure 5 shows the motor, MC-ASD, and direct-drive assembly connected directly to a pump.

The PAYBACK Drive is currently available in nine models, which fit 3 to 250 horsepower motors (see Table 4). Each of the smaller models can be applied to two motor sizes. For example, the EASY-3 model provides speed control from 0 to 1700 rpm for 15 hp motors and from 0 to 1600 rpm for 20 hp motors. Table 4 also shows the sheave diameter and number/type of belts required for each model.

The speed controller for the PAYBACK Drive operates on 115 volts AC (no more than 3 amps are needed for the controller) and provides adjustable voltage output to the drive's electromagnets. The controller accepts current, voltage, or pressure transducer signal inputs, and can interface with most energy management systems. The controller is also equipped with a Manual-Off-Auto selector switch and includes a potentiometer to manually vary output speed. If necessary, simple lock-up bolts can be used to lock the drive case to the motor shaft to provide for constant speed operation.

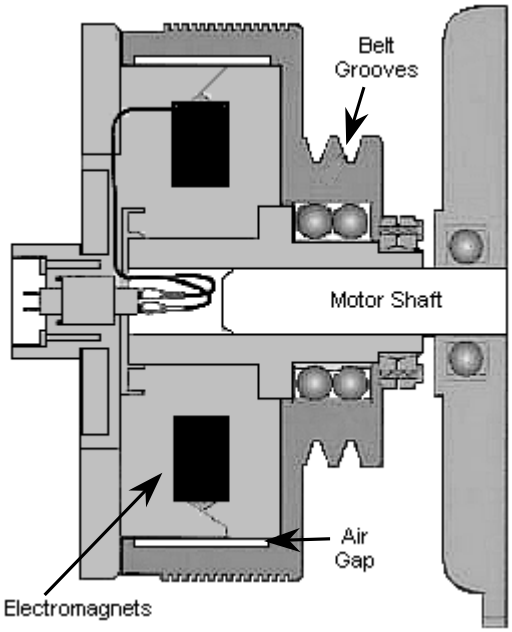


**Figure 3**. Schematic of PAYBACK Drive

**Figure 4**. Photo of PAYBACK Drive and Motor System

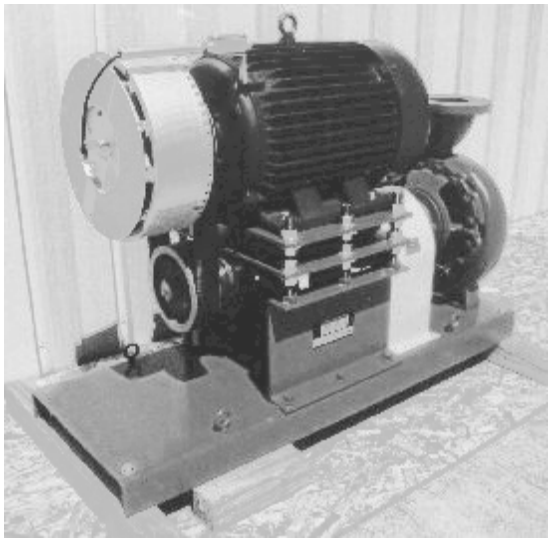

**Figure 5**. PAYBACK Drive in Direct-Drive Configuration

**Table 4**. PAYBACK Drive Model Description

| **AC Motors (1800-rpm Motor)** | | | ***PAYBACK* Drive Description** | | | |
|---|---|---|---|---|---|---|
| **Motor Size (hp)** | **Motor Frame** | **Motor Shaft Diameter (in.)** | ***PAYBACK* Drive Model** | **Output Speed Range (rpm)** | **Number of Belts & Type** | **Sheave Outside Diameter (in.)** |
| 3<br>5 | 182T<br>184T | 1.125 | EASY-1 | 0 to 1700<br>0 to 1600 | 2(3VX) | 5.30 |
| 7.5<br>10 | 213T<br>215T | 1.375 | EASY-2 | 0 to 1700<br>0 to 1600 | 2(3VX) | 6.00 |
| 15<br>20 | 254T<br>256T | 1.625 | EASY-3 | 0 to 1700<br>0 to 1600 | 2(5VX) | 7.10 |
| 25<br>30 | 284T<br>286T | 1.875 | EASY-4 | 0 to 1700<br>0 to 1650 | 3(5VX) | 8.00 |
| 40<br>50 | 324T<br>326T | 2.125 | EASY-5 | 0 to 1700<br>0 to 1650 | 3(5VX) | 9.00 |
| 60<br>75 | 364T<br>365T | 2.375 | EASY-6 | 0 to 1700<br>0 to 1650 | 4(5VX) | 9.25 |
| 100<br>125 | 404T<br>405T | 2.875 | EASY-7 | 0 to 1700<br>0 to 1650 | 5(5VX) | 11.30 |
| 150 | 444T | 3.375 | EASY-8 | 0 to 1700 | 6(5VX) | 13.20 |
| 200 | 445T | 3.750 | EASY-9 | 0 to 1700 | 6(5VX) | 13.20 |

## Installation

Both types of MC-ASD technologies are well suited to retrofit applications and new installations. These devices can be used in either a solid shaft connection or a belt-driven connection between motor and load.

For direct-drive systems, where the motor shaft is connected directly to the load, the shaft is disconnected or cut to insert the MC-ASD coupling. When using the MagnaDrive Coupling, the motor is generally moved 12 to 18 in. farther from the load shaft to provide space to insert the coupling between the motor and driven load. The conductor assembly is bolted to the motor drive, and the magnet rotor assembly is bolted to the load shaft. The two shafts should be in good alignment, although the MagnaDrive Coupling will tolerate a significantly greater degree of misalignment than would be suitable for a solid shaft connection between load and motor. Finally, the control signal is connected (see discussion in Equipment Integration section).

For direct-drive systems, where the motor shaft is connected directly to the load, the shaft is disconnected or cut to insert the MC-ASD coupling. When using the MagnaDrive Coupling, the motor is generally moved 12 to 18 in. farther from the load shaft to provide space to insert the coupling between the motor and driven load. The conductor assembly is bolted to the motor drive, and the magnet rotor assembly is bolted to the load shaft. The two shafts should be in good alignment, although the MagnaDrive Coupling will tolerate significantly greater degree of misalignment than would be suitable for a solid shaft connection between load and motor. Finally, the control signal is connected (see discussion in Equipment Integration section).

The PAYBACK Drive can also be used in a direct-drive process, but requires installation of the direct-drive assembly at additional cost (see Figure 5). The direct-drive assembly requires approximately the same amount of floor space, because the motor is mounted above a new drive shaft. Installation requires good alignment of the new drive shaft with the driven load and some alignment of the belts between the PAYBACK Drive and the new drive shaft. Finally, the control signal is connected (see discussion in Equipment Integration section).

For belt-driven systems, such as most fans and blowers, the PAYBACK Drive is often a simple replacement of the pulley assembly attached to the motor. Disconnect the existing pulley, bolt on the coupling, install and align the belts, connect the control signal, and it's operational. Generally, there is no need to move the motor itself. The MagnaDrive Coupling can also be used in belt-driven applications by either converting the belt-driven system to a direct-driven system if that can be done, or adding a pulley to the output shaft of the drive. In either event, it is likely that the position of the motor would have to be changed.

Situations where the MC-ASD provides a great amount of speed control for a large percentage of its operating hours should be avoided. The amount of slip required creates an inefficient situation and energy is lost in dissipated heat. For example, an MC-ASD should not be used in a direct connection to

attempt to drive a fan at 750 rpm when connected to an 1800-rpm motor. Where possible, apply pulley sizes that allow the motor to operate near its synchronous speed (see Laboratory Testing section for more details).

# Federal Sector Potential

According to the U.S. Department of Energy Motor Challenge Program, industrial motor systems represent the largest single use of electricity in the American economy, consuming 23% of all electrical power generated in the United States. These motor systems can be found in typical "industrial" settings such as manufacturing, power plants, irrigation pumping, and water treatment facilities. However, large fluid-handling systems, which move large volumes of air or water, are also included in this definition and are found in all large buildings. Improvements to major fluid-handling systems represent 62% of the potential energy savings in industrial motor systems. These systems are found in all Federal facilities (DOE 1998).

Research by the Northwest Energy Efficiency Alliance (NEEA) trade group, Portland, Oregon, estimates the U.S. speed control market at $1.6 billion, adding 20% more units per year, as the industry searches for ways to improve the control and efficiency of their processes. This market was divided between AC and DC adjustable drives, as well as other electric and eddy-current drives. To date, all types of existing ASDs have penetrated only 9% of U.S. motor systems (Easton Consultants 1999).

## Laboratory Perspective

Motor speed control is an important energy-efficiency strategy for motor systems in the Federal sector. The Department of Energy, facility staff, and the national laboratories are interested in technologies that will perform in Federal facilities. This document reports the findings from the first Federally sponsored testing of these magnetically-coupled adjustable speed drives.

The Northwest Energy Efficiency Alliance (NEEA), a non-profit organization that promotes energy efficiency in the Northwest, sponsored previous laboratory and field-testing on the MagnaDrive Coupling. The laboratory testing was performed at the Motor Systems Resource Facility (MSRF) at Oregon State University (OSU). OSU has been actively testing products for the MagnaDrive Corporation throughout much of their product development. OSU was a natural fit to perform the testing for this demonstration.

# Application

This section addresses the technical aspects of applying the technology, including how to determine likely applications for the MC-ASD technology. Design and integration considerations for the technology are discussed, including equipment and installation costs, installation details, maintenance impacts, and relevant codes and standards.

## Application Screening

The MC-ASD is generally suitable for application anywhere an ASD could be applied. The most common applications for ASDs are pumps, fans, and blowers, to balance flows and meet changing system needs. In general, all large loads with throttled output (partially closed dampers or valves) or bypass loops to control flow velocity or pressure should be evaluated for ASD retrofit. For ASDs to be cost effective, the motor/load system should have significant operating time at part load.

## Where to Apply

When deciding which MC-ASD technology to use, there are two primary factors to consider: drive type (direct- or belt-driven) and drive size. The PAYBACK Drive is generally more suited to belt-driven systems and is an easy retrofit. It is also currently sized for 3- to 250-hp motors, although larger sized couplings should be available in the future. Belt-driven heating, ventilation, and air-conditioning (HVAC) applications (fans and blowers) that are not easily converted to direct-drive are obvious applications. The MagnaDrive Coupling can also be used for belt-driven applications by installing an additional pulley and shaft support.

In small to medium size direct-drive systems, it is possible to use either MC-ASD technology. The design of the MagnaDrive Coupling makes it the easiest to connect to direct-drive loads. The PAYBACK Drive can also be connected to a jackshaft (available from the manufacturer), which itself is directly connected to the load shaft. A decision on which drive to use should be made based on the unique installation requirements.

In very large direct-drive systems between 250 hp and 1000 hp such as large industrial, irrigation, or water treatment pumps, the MagnaDrive Coupling is currently the only option. They are designed to operate with motors from 720 rpm up to 3600 rpm and, as mentioned, can be readily applied to “medium” voltage (2840 volts) applications. Because both MC-ASD technologies rely on the transfer of torque from the motor to the driven device, using lower nominal speed motors (e.g., 900 rpm) requires a physically larger MC-ASD for a given horsepower.

Both MC-ASD technologies can provide speed control for non-electric applications, such as an engine-driven irrigation pump. The MagnaDrive Coupling can be outfitted with a manual speed control lever or a small controller to provide the actuating signal. A new design of the PAYBACK Drive uses

rotational energy from the motor to generate its own power for the electromagnets, freeing it from grid-supplied power. The control signal is applied directly to the drive.

## What to Avoid

As previously noted, constant torque systems are a difficult application for MC-ASDs. In these situations, where the same torque is required at high and low speeds, the amount of slip needed to regulate the speed under constant torque conditions generates a significant amount of heat in the coupling. These applications are possible, but facility staff should work closely with the manufacturer to ensure proper sizing and installation of the coupling.

This report will also show that users should avoid situations where the load requires the output shaft speed to be substantially reduced for a large portion of the operating hours. In this situation, the MC-ASD would produce a large amount of slip to produce the desired output speed and would be forced to operate in this inefficient mode for a substantial amount of time. The efficiency of the MC-ASD drives is greatest near full speed and drops substantially when operated below about half speed (see the Laboratory Testing section). If by motor downsizing, changing pulley ratio, or staging a series of motor/pumps the motor will operate a greater portion of the time at higher speeds, this will improve the suitability for the MC-ASD devices. These actions should be considered anytime an MC-ASD is applied to get the smallest motor and MC-ASD coupling possible.

## Equipment Integration

Both motor drive systems integrate easily with existing equipment. Installation of the MagnaDrive Coupling requires moving the motor location to provide space for the coupling, while the PAYBACK Drive in belt-driven applications simply bolts onto the motor shaft. The PAYBACK Drive must be aligned properly like any belt/pulley system. As noted, the MagnaDrive Coupling is more tolerant of some degree of misalignment between motor and load shaft. This may actually simplify installation.

Both MC-ASDs can be controlled using a variety of input signals – electrical, mechanical, or pneumatic. When installing an MC-ASD where no previous speed control is present, a control signal must be generated by installing load or flow sensors, which in turn get connected to the MC-ASD actuator. In retrofit applications where the MC-ASD is replacing a previous VFD, the existing control signal is connected to the MC-ASD through the control module provided by the MC-ASD manufacturers.

Both types of MC-ASD have little impact on electrical cabinet space, because they are self-contained near the motor. The MagnaDrive Coupling does require additional floor space for a typical horizontal installation because the motor must be moved back from the load to accommodate the coupling.

## Maintenance Impact

Both MC-ASD technologies require few additional maintenance activities. The MagnaDrive Coupling has two bearings and four pivot assemblies that require periodic greasing. The grease fittings

are easily accessible and can be lubricated at the same time as the motor. The manufacturer recommends cleaning (for excessively dirty environments) and lubricating the Magna Coupling after the first 40,000 hours of operation. (40,000 hours of operation equates to approximately 5 years, if operated 24 hours a day, 7 days a week, or 10 years, if operated on a 12-hour daily shift.) There is no prescribed time when a complete rebuild is required and rebuild would depend on operating schedule and environment. Rebuild kits cost between $1,000 and $1,500 depending on the bearing size. A complete rebuild, including labor, on a 50-hp unit would cost approximately $2,000. A rebuild for a 250-hp unit would cost about $2,500 and a 500-hp unit about $3,000.

The PAYBACK Drive has a brushless, rotary power connector that should be replaced on average every 3 years for continuous operation motors or every 5 years for workday use (8 hours/day) motors. The PAYBACK Drives utilize permanently lubricated-for-life bearings so there is no required lubrication of the drive. The motors should continue to be lubricated according to manufacturer's instructions. The maintenance cost for replacement of the rotors is about $80, which includes parts and labor. PAYBACK bearings are sealed-for-life and cannot be rebuilt, although they are replaced with commonly available bearings. A complete rebuild of a 50-hp drive would cost approximately $500 and a rebuild on a 200 hp-drive would cost $1000.

The MC-ASD couplings may also have a positive impact on other plant maintenance activities. The MC-ASDs do not introduce harmonic power quality issues, as VFDs can. However, they have more inductive load, resulting in a lower power factor than a VFD because the line sees only the motor load. Power factor for inductive loads is more easily corrected. Both manufacturers claim their devices will increase motor life over VFDs because the motors experience fewer harmonics and cleaner power. Because the motor is running at full speed, cooling is provided over the full range of drive speeds. In contrast, VFD drives reduce cooling at low speeds because the fan runs at the same speed as the motor.

## Equipment Warranties

In 60-Hz fan and blower applications, PAYBACK Drives are warranted for 3 years when the drive is purchased to be installed on an existing motor. When the PAYBACK Drive and motor are purchased together, the package is warranted for 5 years. The MagnaDrive Coupling is warranted for 2 years on parts and labor. Both drive manufacturers guarantee 20 years of availability from date of purchase for spare parts for couplings of all sizes. When retrofit on existing motors, neither drive should void warrantees of most common motors. Specific questions should be addressed to the drive or motor manufacturers.

## Codes and Standards

Both MC-ASDs manufacturers report that their products meet IEEE Standard 519-1992 for harmonic control and comply with FCC part 15 specifications, which require that all devices that generate an electromagnetic field meet the requirements to produce only an acceptable amount of radio RFI/EMI interference (IEEE 1992).

Both MC-ASD couplings fall into the category of rotating machinery. As such, servicing that involves removing the protective shields should conform to all OSHA or other standards for servicing rotating equipment. Standard lock and tag out protocols should be adhered to at all times.

## Costs

Historical installed cost data for both couplings are difficult to obtain. Both technologies are fairly new and as more units are produced and more orders received, the cost continues to decrease. Purchasing multiple units will also decrease costs. The cost figures provided here are the published prices as of the June 2002 printing. Actual costs will likely be discounted from these figures.

**Table 5**. MC-ASD Standard Cost Sheets for 2002

| MagnaDrive Coupling | | |
|---|---|---|
| **Model / Size** | **Retail Price** | **GSA Pricing** |
| 8.5 | 6,440 | 6,096 |
| 10.5 | 9,090 | 8,581 |
| 12.5 | 10,582 | 9,974 |
| 14.5 | 11,830 | 11,147 |
| 16.5 | 15,160 | 14,244 |
| 18.5 | 18,410 | 17,269 |
| 20.5 | 21,385 | 20,047 |
| 22.5 | 24,800 | 23,320 |
| 24.5 | 29,600 | 27,740 |
| 26.5 | 34,400 | 32,160 |

| PAYBACK Drive | |
|---|---|
| **Model** | **Retail Price** |
| EASY-1 | 1,600 |
| EASY-2 | 1,800 |
| EASY-3 | 2,500 |
| EASY-4 | 3,300 |
| EASY-5 | 4,900 |
| EASY-6 | 7,200 |
| EASY-7 | 9,400 |
| EASY-8 | 14,000 |
| EASY-9 | 16,800 |

Note: The MagnaDrive and PAYBACK models in a particular row are not used on motors of similar size. See Tables 3 and 4 for sizing information.

Table 5 shows the listed costs for the MagnaDrive Coupling, which includes freight. Models for vertical installations cost slightly more. Certain models are available as "floating shaft" (designated as "FS") consisting of a pedestal shaft for both the motor and load shaft. FS is a specific item required for high-speed, small-diameter shafts, or for long drive shafts. The floating shaft will only be required in special applications. The drive manufacturer will determine if one is needed through an engineering evaluation of the motor/load system.

Installation costs can vary significantly for each facility and each motor. On average, it would take two mechanics about 4 hours to disconnect a motor, move it back, and install the MagnaDrive Coupling. A controls specialist would need less than 1 hour to program the energy management system to provide the necessary control signal. An electrician would be needed to disconnect the motor, connect the control signal, and reconnect the motor. Expect installation costs to range from $500 to $1000.

Table 5 also shows the listed costs for the PAYBACK Drive, including freight. Installation costs can vary significantly for each facility and each motor. Local facilities staff generally performs the installation with support from the manufacturer if needed. Smaller drives can be installed by a single person experienced with motors, belts, and pulleys in about 2 hours. The electrical connections are fairly simple, requiring at most 1 hour of an electrician's time per drive. On drives larger than 50 hp, two people would be needed for about 2 hours and could potentially require equipment to lift and align the drive. To estimate the installation cost, use these guidelines and plug in your local labor rates or contact the manufacturer for detailed estimates. Expect installation costs to range from $300 to $1000.

In considering the cost of these devices compared to traditional speed control technologies, such as a VFD, it should be noted that these devices work with all existing motors. A VFD may require purchase and installation of an inverter duty motor.

## Utility Incentives and Support

The MC-ASD technology can apply to utility programs and state public benefit funds that target speed control of electric motors. Sites are encouraged to work with the local electric utility to determine what incentives are available for motor speed control, what form the support takes, and whether the MC-ASD meets the requirements and or spirit of the program. Some utilities have programs specifically aimed at ASDs, while others have generic programs based on expected demand and/or consumption savings. Because MC-ASDs are a relatively uncommon technology, incentive programs may not specifically list this technology. The results of this and other studies can provide third party documentation of the potential performance of this technology.

In the August 1999 *Energy User News*, approximately one-quarter of the electric utilities surveyed in the United States and Canada offered incentive programs that specifically included motors (Energy User News 1999). Of those utilities, only a handful of programs specifically target ASDs. Just because a specific motor speed control program isn't identified, don't rule out the possibility. Utilities can be very responsive to technologies that reduce demand and save energy and an additional quarter of the utilities surveyed had generic or customized programs that could include motors drives. It should be recognized that all ASDs are more applicable to reducing off-peak energy use than peak load. The incentives available will likely reflect this.

If a site is new to motor speed control, technical assistance from someone other than equipment manufacturers can be very helpful. Take advantage of in-kind support that may be offered by your local utility or energy office. Some utilities will offer help to determine where to apply ASDs, and provide design assistance and technical support. Financial assistance can be in the form of direct rebates or low interest loans. Rebates are commonly based on the amount of demand that is reduced and can range from $100 to $200 per kW (or more). Other utilities may provide incentives for reducing total monthly consumption as compared to a baseline.

## Additional Considerations

An additional consideration for an end-user would be that MC-ASDs do not produce additional harmonic distortion. Such distortion would commonly be the result of using VFD devices.

The MagnaDrive Coupling is marketed for drive applications beyond the typical 1800-rpm motors. Because it is a mechanical device, it can be used on motor systems regardless of voltage requirements. Thus, application to motors with voltage requirements of 600 volts or higher is easily achieved. VFDs for these higher voltage motors can be difficult to find and/or expensive. For higher speed motors, torque requirements are less, and a physically smaller unit can be purchased. For slower motors, the torque requirements are higher, and larger units are purchased. The PAYBACK Drive has been designed and

marketed for use with 1800-rpm motors. Use with higher speed motors is possible, although the controls may have to be modified, the life expectancy of the bearings would be reduced, and the manufacturer may modify the product warranty. For slower speed motors, torque requirements are higher, and larger units are specified. Interested parties would be advised to contact the manufacturer directly regarding using the PAYBACK Drive in applications other than 1800-rpm motors.

As discussed, both products can be used in non-electric applications such as engine-driven irrigation pumps, where speed control would produce savings in the form of reduced fuel usage in the engine. Some control signal would still have to be provided for these systems.

# Field Performance

This section discusses the technology performance in specific field installations. Information was collected from the manufacturers and site personnel where MC-ASDs were installed. The selected case studies provide a good look at each technology's performance in applications where they are well suited. These results are actual installations, subject to site-specific operation and costs. Laboratory test results, presented in a later section, provide the opportunity to compare the technologies under controlled conditions.

## HVAC Blower Application – PAYBACK Drive

The University of Texas M.D. Anderson Cancer Center is a nationally recognized comprehensive cancer care center in Houston, Texas. Between 1996 and 2001, three new buildings were constructed, bringing the total floor space at the Texas Medical Center to 4.1 million square feet.

The many pumps, fans, and blowers providing conditioned air offered numerous opportunities for speed control. One application, in particular, stood out as highest priority. Airflow from several large blower units was being controlled using adjustable cone-shaped dampers that were inserted mechanically into the air stream. Although the cones were supposed to eliminate turbulence, vibrations were a consistent problem. Every so often, the affect of vibration or a stuck limiter on the control system would cause one of the cone-shaped dampers to break apart or, worse, get pushed through the fan blades.

The facilities staff began to explore other options for speed control. They looked at VFDs, but the installation required too much downtime in a 24-hour hospital facility. In addition, the large drives would have required a fair amount of new wiring, which would add to the downtime. In December 2000, the staff decided to install 17 PAYBACK Drives on motors ranging in size from 100 to 200 hp. PAYBACK Drives were chosen primarily because of their easy installation for retrofit applications. The drives were installed at night. The smaller drives were installed in about 1 hour. The larger drives were installed three at a time during an 8-hour outage.

The 17 PAYBACK Drives were installed at a cost of $600,000, which also included an extensive rebuild of the air-handling units. The project was paid for with capital equipment funds and justified because of the high maintenance costs and failure rate of the existing system. Energy savings were a secondary benefit. VFDs were evaluated as an alternative form of speed control, but would have cost $250,000 more to install. No detailed energy use data was available for the systems, but the MC-ASDs were projected to save energy and maintenance costs over the existing system.

## HVAC Pumping Application – MagnaDrive Coupling

The 55-story Washington Mutual Tower is one of downtown Seattle's premier office buildings. Built in 1988, the tower contains over 1 million square feet of floor space. Chillers located in the basement/

lower level of the building cool a large portion of the building. Two motors were identified as potential ASD applications – a condenser water pump and a chilled water pump.

A 75-hp condenser pump circulates water through the chiller to the cooling tower. The pump operates continuously at full speed. A hand valve was placed in a restricted position to control flow. At this setting, energy demand for the pump with the valve restriction was a constant 38 kW.

The chilled water pump is a 125-hp, 1800-rpm vertical shaft motor running a centrifugal chilled water pump. The pump circulates chilled water to 33 floors of the building. On each floor, a thermostat, control valve, and heat exchanger use the chilled water to maintain a constant space temperature. Warm water leaves each floor and returns to the chiller to be re-cooled. Water flow through the chiller was regulated by partially closing a hand valve on the pump discharge. The motor load was 65 kW with the valve partially closed for normal operation.

In addition to the potential energy savings of speed control, several other issues were important to building personnel. Turbulence, cavitation, and vibration were causing maintenance problems in the valves and pumps. In addition, electronic soft-start equipment was needed to mitigate the start-up voltage sags caused by the motors.

Two MagnaDrive Couplings were installed, one on the condenser pump and one on the chilled water pump. The building's control system was programmed to use a 4 to 20 milliamp signal to provide variable speed operation with the MagnaDrive couplings to provide precise flow requirements based on temperature readings at the far end of the loop. After installation of the MC-ASD, the condenser pump provides the required approximately 2000 gpm with an electric demand of 13 kW – a reduction of 66% over the previous load. The electric demand on the chilled water pump was reduced to 45 kW, a reduction of 31%.

During portions of the year, cooling is provided through 100% outside air, taking advantage of cool Seattle weather. On average, the chillers are operated during work hours for only 100 days per year. The project resulted in savings of 36,000 kWh per year and a reduction in demand of approximately 45 kW per month. A similar project in a different climate, where mechanical cooling is required more often, would produce even greater savings.

The building's staff chose the MagnaDrive because, in its vertical configuration, it takes up no additional space in cramped mechanical rooms. In addition, the installation was much simpler than a VFD, which means it was cheaper. The excessive vibration problems were eliminated and the motor start-up current was substantially reduced, eliminating the need to purchase soft-start electronics.

# Laboratory Testing

To accurately compare the two MC-ASD technologies under identical conditions, these devices were tested at the Motor Systems Resource Facility (MSRF) at Oregon State University. The two MC-ASD technologies discussed in this report were compared to a VFD under identical load conditions in a controlled setting. This section discusses the results of the laboratory tests (OSU 2001).

## Facility Description

The Motor Systems Resource Facility (MSRF) is located on the campus of Oregon State University (OSU), built with support from several industrial sponsors. The MSRF is a testing laboratory in which electrical machines, adjustable speed drives and variable speed generators, and their related converters and controls can be evaluated. In addition to testing to recognized industrial standards, the facility is intended as a source of advice, information, reference and instruction on issues and equipment related to electrical machines and their operation.

OSU was chosen as the location based on its history of successful projects in this area and the expertise developed over 10 years of service to regional utilities and industries. OSU College of Engineering research faculty, electrical and mechanical technical staff, and postgraduate students operate the facility. This provides an independent resource to industry, combined with a research and education function for the University.

## Test Procedure

The goal was to test the system efficiency of three different ASD systems (MagnaDrive Coupling, PAYBACK Drive, and a VFD) as used to drive a distinct load profile. Each ASD system was used to drive three different load profiles commonly found in HVAC systems:

1. A variable-flow fan.
2. A variable-flow pump with high static head.
3. A variable-flow pump with low static head.

Each load profile was represented using a dynamometer to ensure repeatability. The system efficiency was measured using the same 50-hp motor attached to each coupling or powered by the inverter. Details for the test motor are provided in Appendix A.

Four basic motor test setups were proposed for each fan or pump curve simulated:

- Test 1: Inverter-driven VFD drive

- Test 2: MagnaDrive Coupling installed as a direct-drive to the system

- Test 3: PAYBACK Drive installed with integral pulley and belt-drive system. For this test, a 1:1 pulley ratio was used to utilize the identical fan/pump curves as in the direct-drive tests.

- Test 4: MagnaDrive Coupling with pulley and belt-drive setup. For this test, a 1:1 pulley ratio was used to utilize the identical fan/pump curves as in the direct-drive tests.

A schematic of the four tests is shown in Figure 6.

Details for the adjustable speed devices tested are shown in Appendix A.

For each fan or pump curve, at least nine individual speed points were tested to characterize performance of the drive and motor system along the curve. In addition, an examination of reactive power and motor temperatures for the VFD and MC-ASDs was provided to examine the impact each drive technology might have on site reactive power, as well as motor longevity.

With the exception of the upper load points, which were difficult to reproduce because of the slip in the two adjustable speed drives, the actual test torque and speed load points were always within 1% of the target point on the torque/speed curve for each of the four test conditions, for each of the adjustable speed drives.

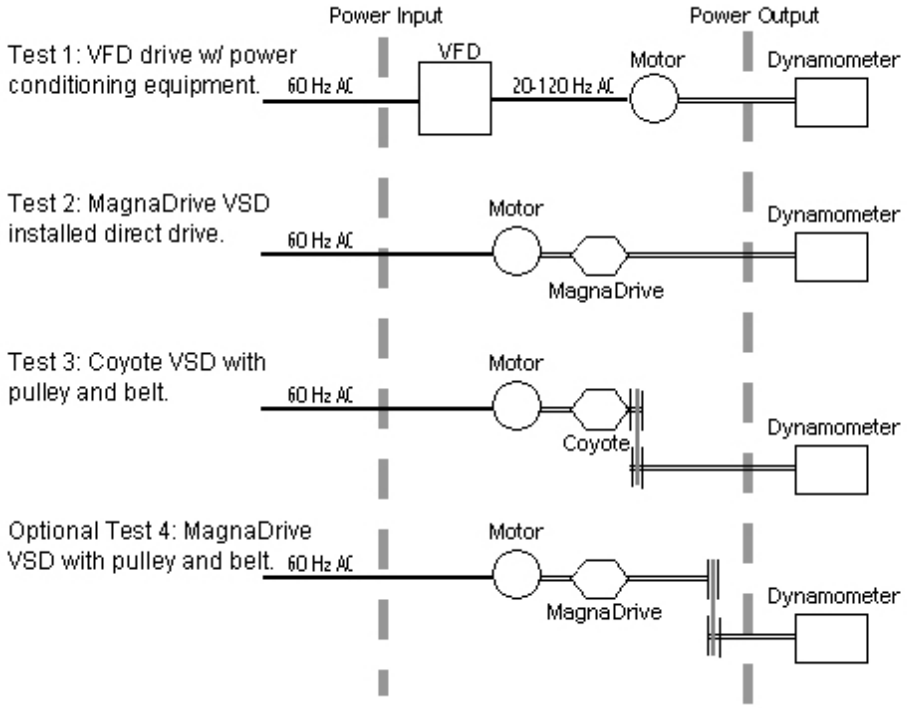


**Figure 6**. Testing Equipment Schematic

## Test Results: Fan Load Profile

Each of the four test setups was used to drive the fan curve test profile. The actual test results are shown in Appendix A. Figure 7 shows the power consumption over a range of output speed for the VFD, PAYBACK Drive, MagnaDrive Coupling with a direct-drive load (referred to here as MagnaDrive-Direct), and the MagnaDrive Coupling with a belt-driven load (referred to here as MagnaDrive-Belt) driving the fan load. Actual test data points are shown as gray symbols, while predicted data points are shown as white or hollow symbols.

During the fan test, the VFD operated more efficiently than the MagnaDrive and PAYBACK over the full range of speed control, using less power for all cases of essentially identical fan shaft power (determined at the dynamometer). Near full speed, efficiencies of the three drives are more similar, as shown in the inset in Figure 7. The test protocol used the dynamometer to set specific torque in line with the fan curve and adjusted output shaft speed to match the speed/torque point. This method of using a target torque presumes that all ASDs are able to meet all points on the fan curve. Although this

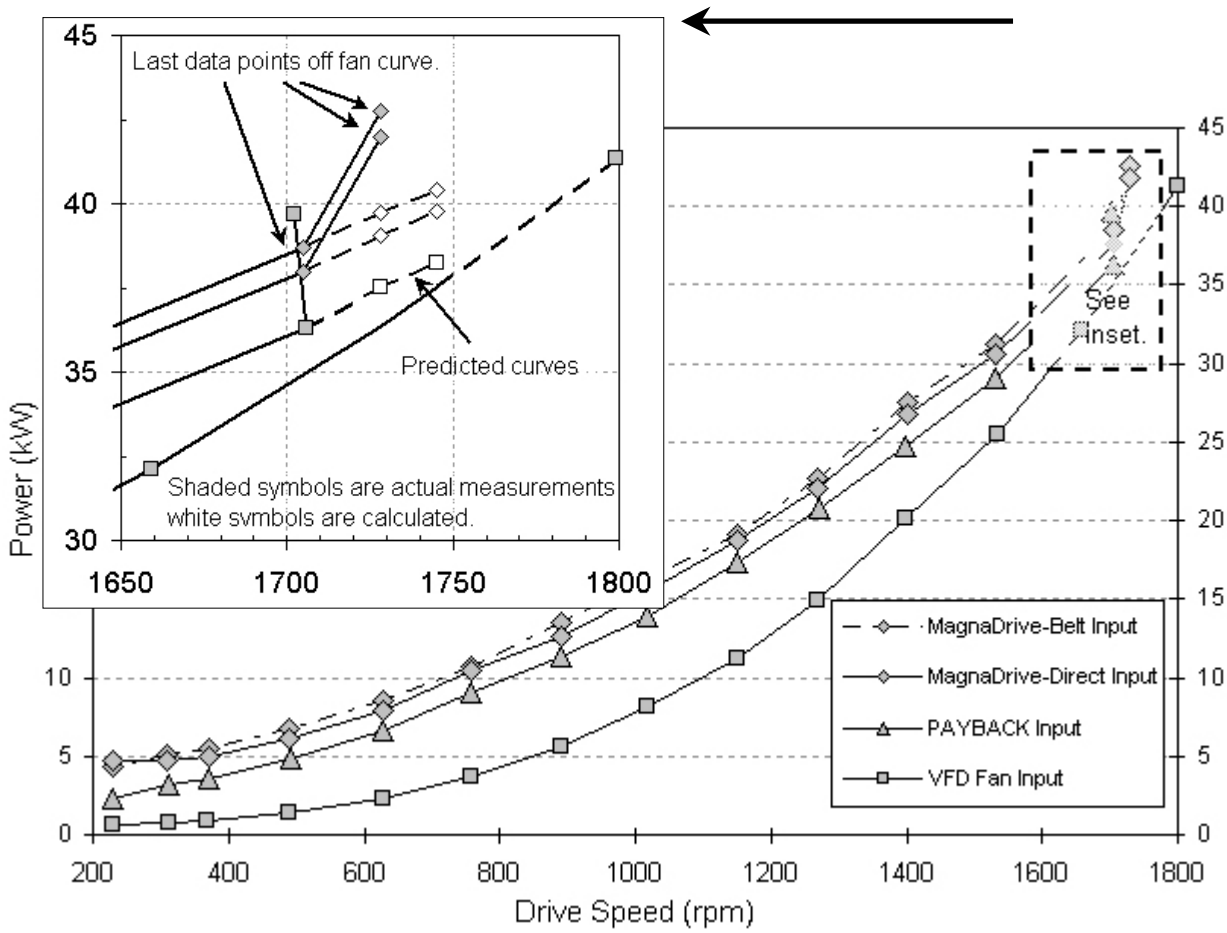


**Figure 7**. Power Consumption Over Range of Speed for Fan Load

assumption is accurate up to 1705 rpm, the last torque target was determined for a speed of 1800 rpm. This point is at a speed above the normal operation of the PAYBACK and MagnaDrive units tested, and also above the normal motor operating speed. For both MC-ASDs, it was possible to meet the torque target by reducing the drive output speed to a point below that of the highest speed point of the fan curve. Hence, these final points do not represent the power consumption of the motor-MagnaDrive or motor-PAYBACK systems, as would be found using the actual fan or pump system currently being tested. Power points (as measured in testing) that do not fall on the fan or pump curve will be specifically addressed during discussion of the test results.

The highest data point on the VFD fan curve shown is also a misleading indication of actual system power consumption. The nominal full load motor speed, when used with standard AC current, is 1775 rpm for the motor tested. However, the highest speed tested with the VFD was 1800 rpm. This is essentially the synchronous speed of the motor unloaded, but does not take into account the normal slip of the fully loaded motor. This 1800-rpm point is achievable with the VFD by increasing the frequency of the current output beyond 60 Hz, and hence over-speeding the motor. While this 1800-rpm point is on the fan curve and achievable, it is not one that a normally sized fan system would likely encounter. It does illustrate some of the increased flexibility that can be achieved with a VFD.

With the exceptions discussed above, the speed points on the power curves do fall on the fan curve, and it is possible to compare the resulting system power consumption. At 1705 rpm (96% of full motor speed), the VFD used approximately 34 kW. The PAYBACK Drive used 36.3 kW, the MagnaDrive-Direct used 37.6 kW, and the MagnaDrive-Belt used 38.4 kW. The three magnetically coupled drives use approximately 2.3 to 3.6 kW (6.8 to 13%) more power than the VFD at this speed. As the speed of the fan was reduced below 1700 rpm, the difference in efficiencies between the MagnaDrive-Direct, MagnaDrive-Belt, PAYBACK and VFD became more significant. At 50% speed (~890 rpm), the VFD fan consumed 5.55 kW, while the PAYBACK, MagnaDrive-Direct, and MagnaDrive-Belt consumed 5.74, 7.05, and 8.0 kW more power, respectively. At the minimum speed tested (230 rpm), the PAYBACK consumed 2.34 kW, with the MagnaDrive variations slightly higher, but within 2.5 kW of the PAYBACK Drive.

There appears to be a relatively constant, 2 kW difference between the PAYBACK and MagnaDrive-Belt for all the fan speeds tested, with the PAYBACK using the least energy. The MagnaDrive-Direct averaged approximately 0.55 kW less than the MagnaDrive-Belt over the entire range of speeds tested. This difference is most likely the result of the additional belt losses, bearing losses, and aerodynamic drag, or "windage," losses. At full PAYBACK power, 1705-rpm fan speed, the PAYBACK and motor combination consumed 2.14 kW less than the MagnaDrive-Belt combination and 1.34 kW less than the MagnaDrive-Direct.

The test results suggest that the bearing and windage losses for the MagnaDrive-Direct are 2.29 kW. These losses are nearly constant over the range of speeds because the magnet assembly with its cooling fins is attached to the motor shaft and always rotates at motor speed. It is interesting to note that earlier

testing by OSU on the MagnaDrive Coupling showed the losses on this size unit to be between 1.0 and 1.5 kW. At this time it is unknown why this test differs from OSU's earlier testing, which was performed using a different motor (OSU 2001).

It should be noted that the MagnaDrive ASD tested was a 14.5 model. The current model selection chart (shown in Table 3) suggests that a 12.5 model might have served the required application with lower aerodynamic drag, or "windage," losses than the 14.5 model. The likely reason for choosing the 14.5 model was that it is able to attain a higher top speed than the smaller model. Unfortunately, the testing data did not seek to determine the top speed of each MC-ASD in each test application. Using the 12.5 model might have resulted in a more equitable comparison with the PAYBACK unit tested.

Dividing the output motor shaft power by the input electrical power at each point calculates the efficiency of each combined motor/drive system. Figure 8 shows the drive efficiency as a function of fan shaft power (in kW). Notice that the VFD operated at between 88% and 92% efficiency from the maximum power tested, down to approximately 35% of maximum power consumption, with a sharp decline in efficiency below 35% output power. Both the MagnaDrive and PAYBACK showed a rapid degradation in efficiency as speed was reduced over the entire range of speeds tested.

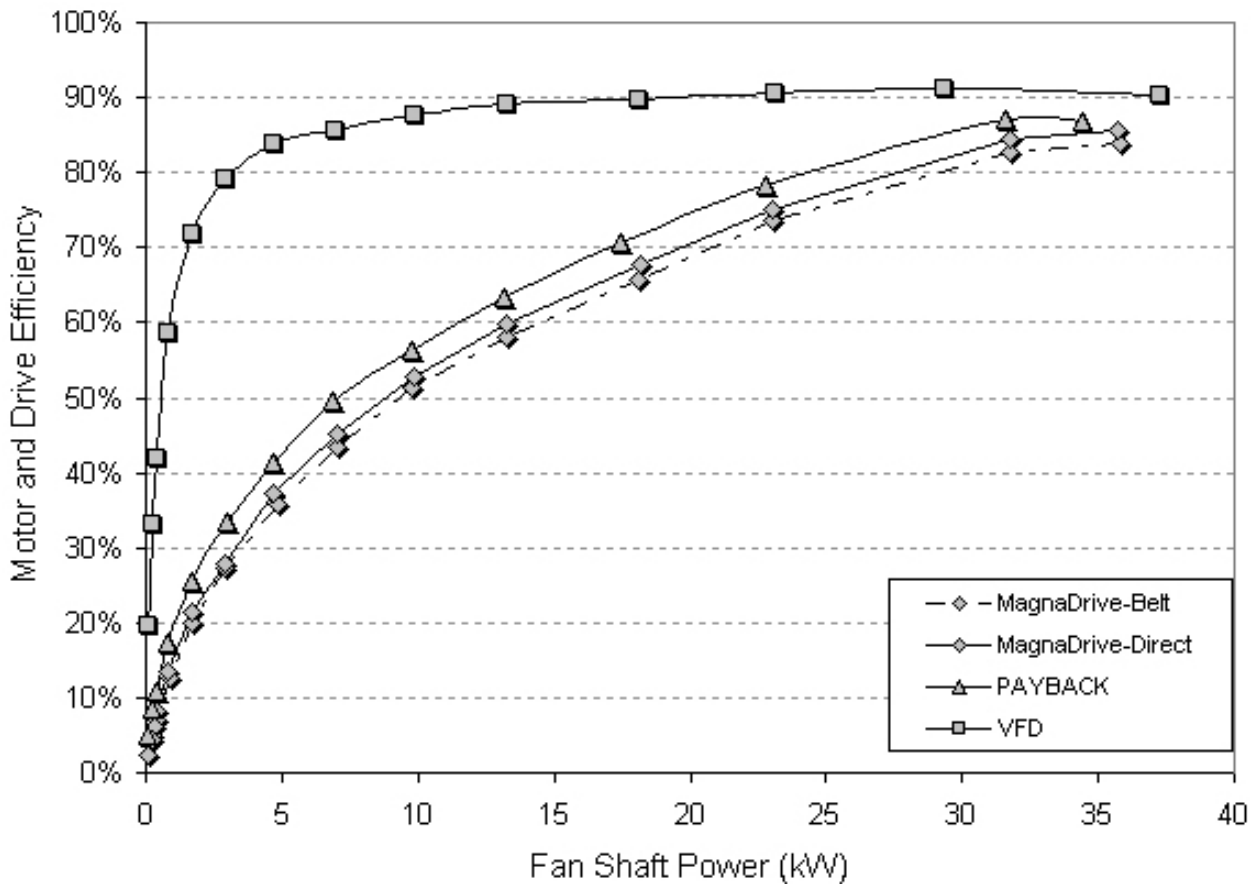


**Figure 8**. Fan Motor and Drive Efficiency as a Function of Shaft Power

The power usage discussion for the PAYBACK Drive has only addressed the motor power input. Electrical power is also used to provide power for the PAYBACK Drive's electromagnet. Because the spacing between PAYBACK Drive rotor and the driven copper coupling in the PAYBACK is constant, the controller is used to increase the current to the electromagnet and thus the strength of the magnetic field between rotor and driven coupling. This minimizes the slip between the rotor and coupling. The total power to the electromagnet is a small fraction of the power to the system. Figure 9 shows the total power to the electromagnet in the PAYBACK as a function of output speed for the test. The total power to the electromagnet varied approximately linearly from 13 watts to 25 watts for the measured points from 230 rpm up to 1530 rpm, representing between 0.57% of the motor power consumption at low speed down to 0.08% of the motor power requirements at 1530 rpm. To reach the required torque at an output speed of 1706 rpm however, it was necessary to double the power to the electromagnet to 56 watts. This still represents only 0.16% of motor power at this point.

The final speed point that was tested was unrealistic for the MC-ASD systems because it represented the fan torque at 1800 rpm, which was above the nominal motor speed and unattainable. However, the drive was able to provide the equivalent level of peak system torque, but at a lower speed. For the

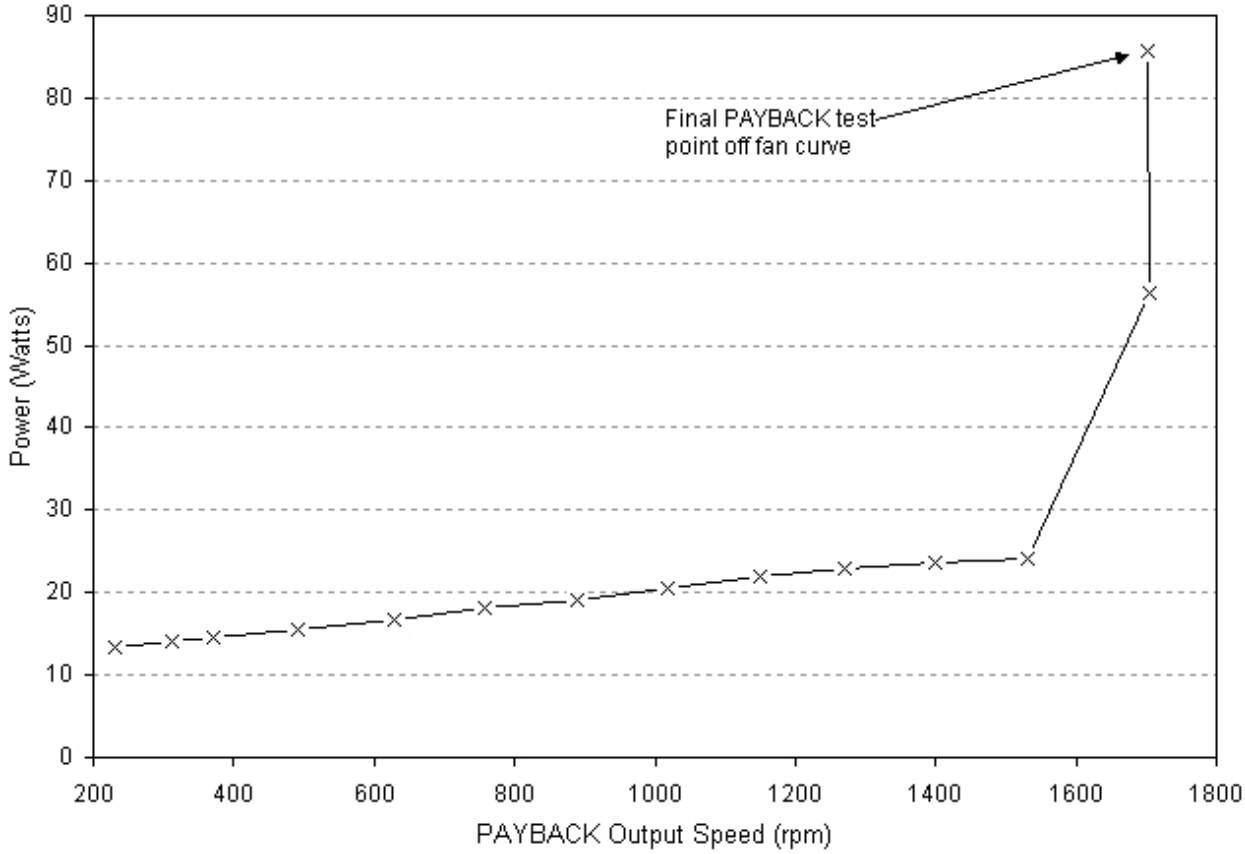


**Figure 9**. PAYBACK Drive Electromagnet Power Consumption versus Fan Speed

PAYBACK, the equivalent to the 1800-rpm torque was provided at a speed of 1702 rpm for the drive output and a motor speed of 1771 rpm (total slip of 69 rpm). The electromagnet power at this point was 88 watts, or 0.22% of the motor power consumption.

The ability to provide this last level of torque suggests that additional high-speed points along the fan curve, with less slip between motor and coupling and lower system torque, would likely have been attainable by the drive system. A similar logic applies to both MagnaDrive configurations because with these, reduction of the gap between magnet and copper plate assembly is similarly used to increase the strength of the magnetic field. With all MC-ASDs, a certain amount of slip is expected when transferring torque through the magnetic coupling. With careful sizing, both MagnaDrive and Coyote Electronics claim that their systems can operate fans or pumps to within 25 rpm of full speed on a typical 1800-rpm motor, although this will depend on the torque and power characteristics of the load. Full-speed operation anywhere between 1 and 4% of nominal motor speed should be considered typical of actual practice. Peak drive efficiencies will also be dependent upon the highest speed of the MC-ASD. Because efficiency is directly related to slip, an MC-ASD that operates with very little slip becomes an extremely efficient device at the time when the most power is being consumed.

The tests performed did not define the peak speed limit of either the MagnaDrive or PAYBACK systems. In a fan system, the shaft torque varies approximately as the square of the shaft speed, so for this power curve, a full-load motor shaft speed of 1775 rpm minus 25 rpm of slip implies a peak fan speed of 1750 rpm, and corresponding fan torque at this point of 187.5 Newton-meter. This is below the 197.9 Newton-meter peak torque achieved by the PAYBACK Drive at a fan speed of 1702 rpm.

Efficiency of the magnetic drives is higher at higher speeds because the magnetic drives suffer efficiency losses with greater slip between the motor and drive speed. Figure 10 shows the relationship between motor/drive slip and the PAYBACK, MagnaDrive-Direct, and MagnaDrive-Belt system efficiencies (including motor efficiency) for all tested points along the fan curve.

Extrapolating each of these curves to a slip of 25 rpm (drive speed of 1750 rpm) suggests maximum system efficiencies of 89.6%, 88.0%, and 85.2% for the PAYBACK, MagnaDrive-Direct, and MagnaDrive-Belt configurations, respectively. The comparable efficiency at this point from the inverter-driven fan configuration was interpolated at 90.6%.

Overall, it is seen that the trends in power consumption and efficiency of the three magnetic drive systems are similar, with the PAYBACK system operating somewhat more efficiently than the MagnaDrive-Direct systems, even after inclusion of the small electromagnet coupling power. The MagnaDrive-Belt configuration was somewhat less efficient than the MagnaDrive-Direct configuration, likely as a result of the additional pulley losses.

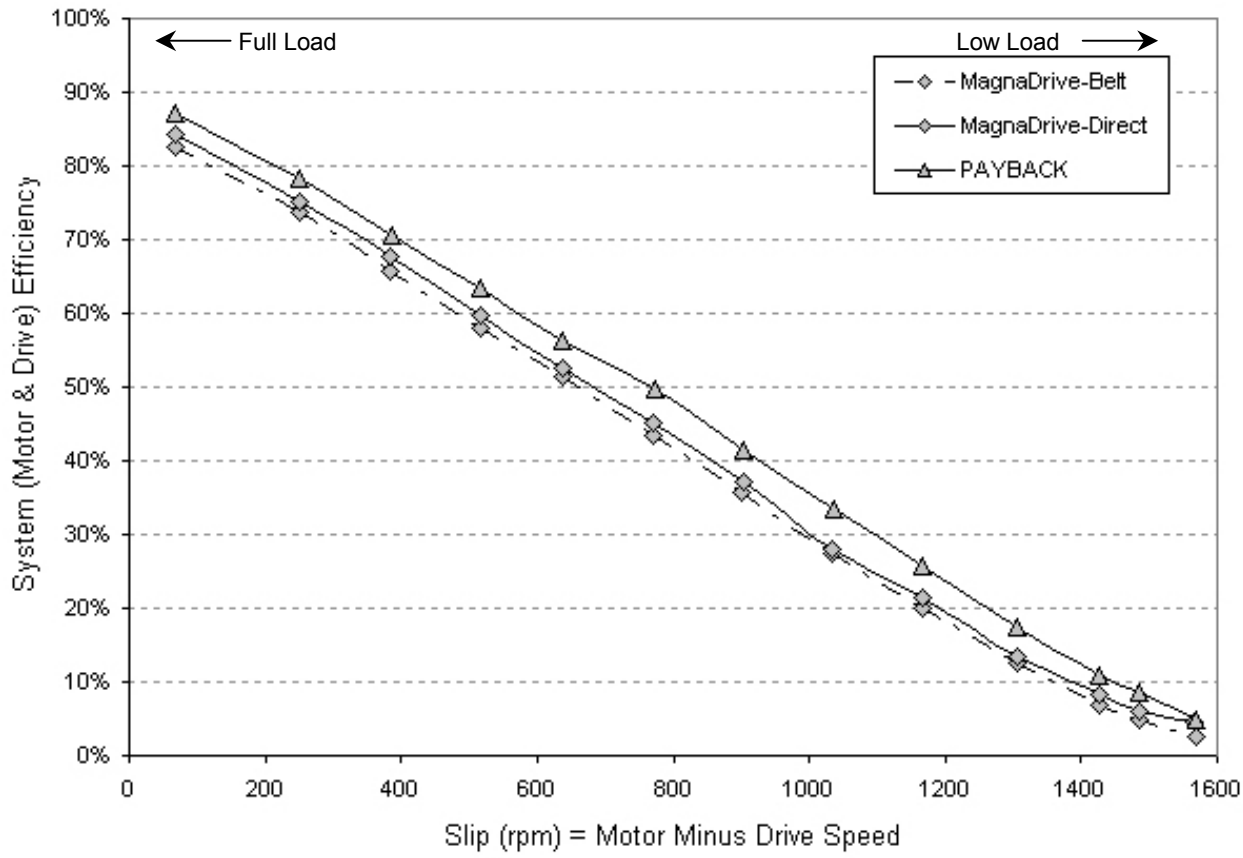


**Figure 10**. System Efficiency versus Slip Between Input and Output Shafts [calculated as motor speed minus drive speed in rpm]

## Test Results: Low Head Pump Application

Figure 11 shows power consumption over a range of output speed for each of the technologies in a low head pump application.

In comparing the three systems, the VFD clearly showed the lowest power consumption. The MagnaDrive-Direct again consumed a roughly constant 1.5 kW more than the PAYBACK Drive, except at the very highest rpm point tested (1705 rpm), where the PAYBACK Drive was not able to maintain the desired torque required for the pump curve. The torque requirements for this low head pump curve were approximately 16% higher than that of the fan test near 1700 rpm. This appeared to have been more torque than this size PAYBACK Drive could provide at that speed.

The MagnaDrive configurations were both able to meet the pump curve at this highest rpm point. For each point on the curve with the exception of the highest one, the MagnaDrive-Belt configuration consumed on average 2.3 kW more than the PAYBACK. This illustrates the same tendency (MagnaDrive-Belt > MagnaDrive-Direct > PAYBACK) that was seen with the fan curve test.

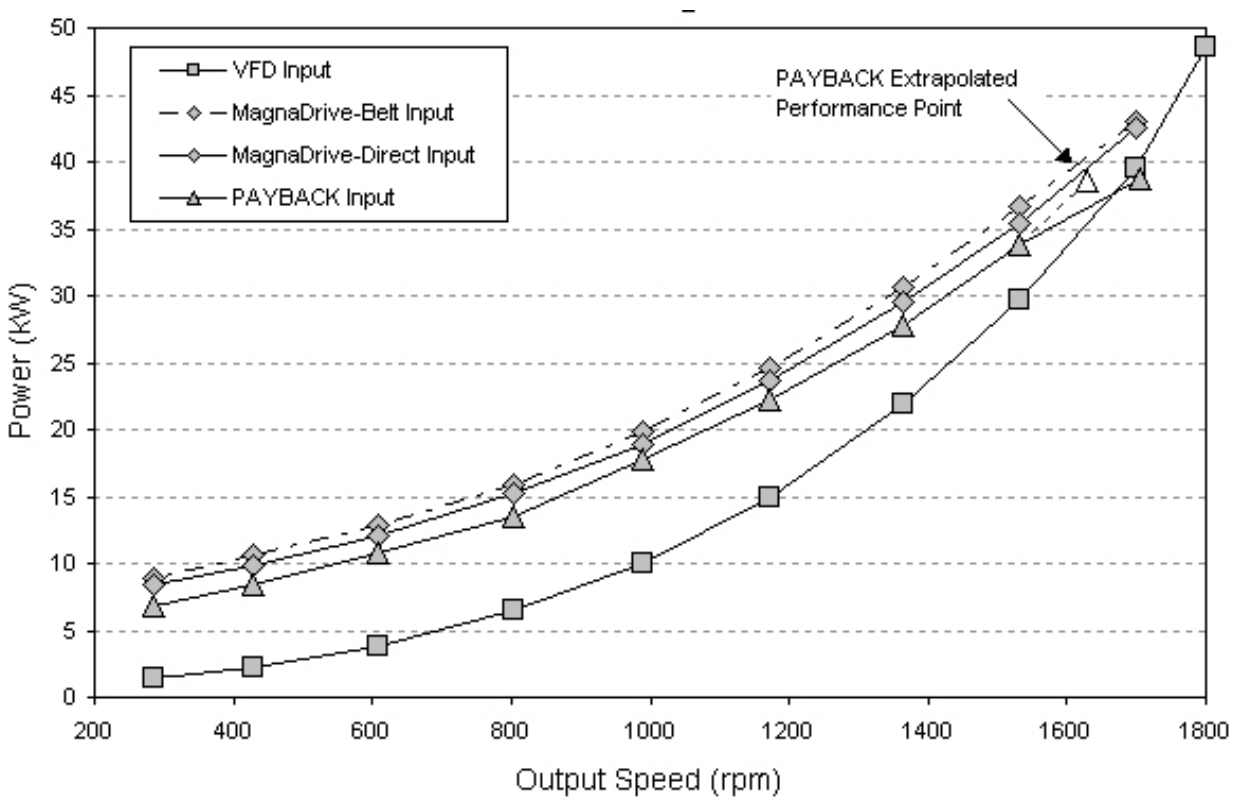


**Figure 11**. Low Head Pump Drive Power Consumption and Pump Shaft Power Curve

As shown in Figure 11, the MagnaDrive-Direct required 7.6% more power than the inverter-driven systems at 1700 rpm. However, the relative difference in power consumption between the VFD and MC-ASDs rapidly increased as the drive speed decreased. At 990 rpm (56% nominal motor speed), the PAYBACK required 78% more energy and the MagnaDrive-Direct required 90% more energy to drive the pump load compared to the VFD-driven motor.

While the last data point taken for the PAYBACK Drive was off the pump curve, it is possible to estimate the performance of a test point with similar torque conditions as the highest speed test point. In the test, the PAYBACK was able to achieve 189 Nm of torque at 1714 rpm. This operation point would not exist on the real pump curve because pump torque would be a function of flow and not an independent variable as it was in the test setup. Consequently, if this was a real variable speed pump application, a more realistic operating point along the pump curve would have been to achieve the same 189 Nm of torque at 1628 rpm, with a pump shaft power of 32.24 kW. Total motor power at this point was estimated at 38.5 kW based on a linear relationship between system efficiency and slip, and estimated slip of 147 rpm at this point. Because this point has a speed lower than the 1714-rpm test point, the combination of a similar level of electromagnet intensity and greater slip ensured that the required torque could be transferred at this new point. This point is clearly achievable and has been shown on the PAYBACK power curve in Figure 11. Higher speed points are likely also achievable, but are less easily identified from the test data.

## Test Results: High Head Pump Application

Figure 12 shows the power consumption over a range of output speed for each of the three technologies in a high head pump application. In the high head pump curve, the head pressure encountered by the pump was not purely a function of flow but was instead the sum of static and a dynamic (flow) head. The principal impact of this was that the torque on the high head pump shaft was not a linear function of shaft rotational speed, making the power consumption of the pump a more complicated function of flow.

In the tests using the high head pump curve, all test points taken during each test configuration lay on the pump curve up through the highest speeds tested, 1705 rpm. Higher speeds were not tested for the high head pump application. However, it is possible that higher speed/torque combinations would be attainable by the MC-ASDs and at those higher speeds, they would be expected to perform more efficiently.

At 1705 rpm, the PAYBACK used about 1 kW (2.5%) more power than estimated for the VFD-driven load. The MagnaDrive-Direct and MagnaDrive-Belt configurations used about 2 kW (5.8%) and 3 kW (8.4%) more power, than the VFD at this speed.

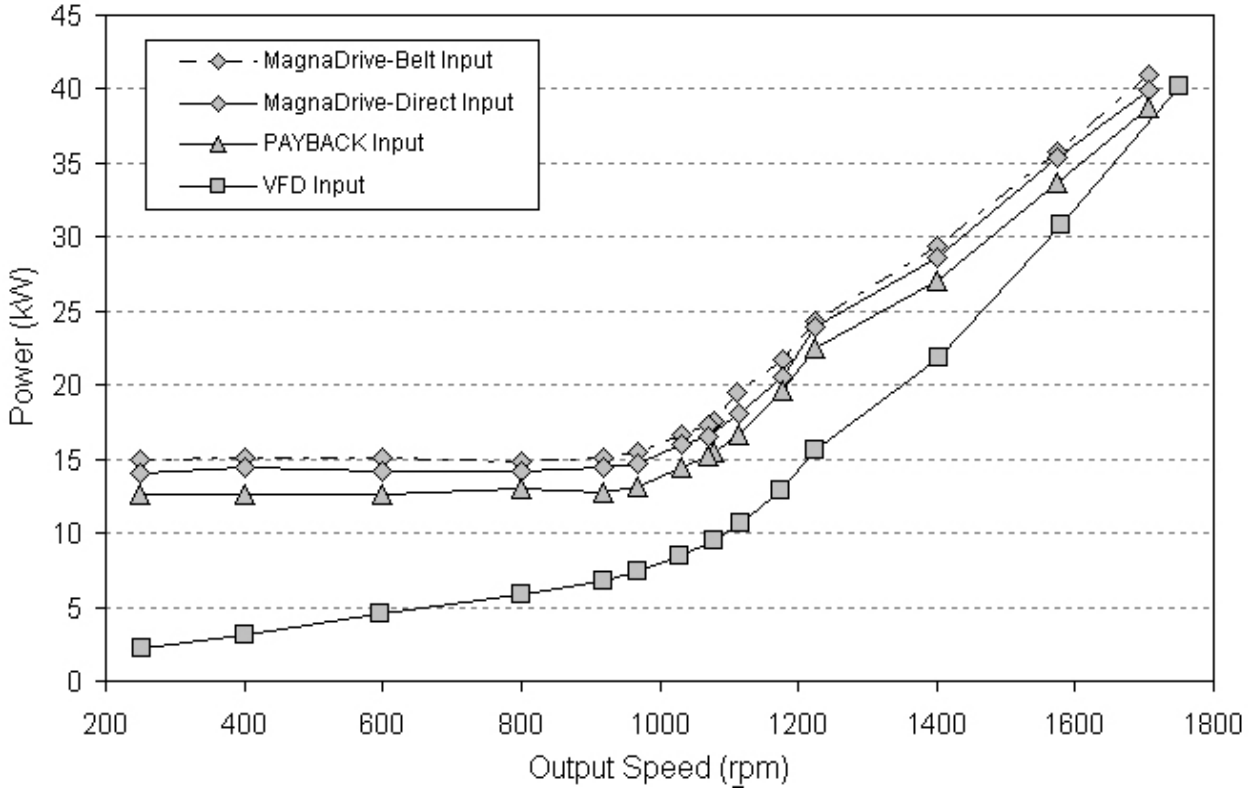


**Figure 12**. High Head Pump Drive Power Consumption and Pump Shaft Power Curve

There was no attempt to establish the maximum speed on the pump curve that could be obtained by the MC-ASDs. Inspection of the pump curves suggests that if the PAYBACK could have provided the torque at higher speeds, its power consumption would have been very similar to that of the VSD at the maximum VSD speed tested (1750 rpm). As pump speed was reduced, the power consumption of the VFD dropped at a faster rate than that of the magnetically coupled drives. The relative performance of the three MC-ASDs was similar to that seen in the other tests, with the PAYBACK having the lowest energy use of the three, followed by the MagnaDrive-Direct and then MagnaDrive-Belt configurations. However, as the drives approached half-speed (900 rpm), the power consumption of the MC-ASDs leveled out to a constant value. This is believed to occur because, in this test, the energy losses caused by increased slip in these drives increased at approximately the same rate as the pump shaft power decreased. At the minimum flow tested (250 rpm), the MagnaDrive-Direct used 6.3 times more power than the VFD-driven load. The PAYBACK Drive used 5.7 times more energy than the VFD. Both the MagnaDrive-Direct and PAYBACK Drive operated at an almost constant 14.2 kW and 12.7 kW, respectively, between 250 and 918 rpm. This suggests that in this high head application, there would be no energy benefits to running the MagnaDrive or PAYBACK below 50% of full load. Notice, however, that the VFD follows closely the shaft power requirements even at low speed.

## Power Factor

Power factor was measured for each of the motor drive systems, either at the input to the VFD for that system, or at the motor for the MC-ASD systems. Power factor for the VFD was significantly lower than that of the MC-ASDs; however, total power is also lower. In a building application, it is the total kilovolt-amp reactive power (kVAR) produced by the motor drive system that is important. Total kVAR produced by each drive system (including the PAYBACK electromagnetic controller) is shown for the fan application in Figure 13 for all measured data points along the fan curve application. The kVAR produced by the VFD is higher at full load than that of the MC-ASDs, but drops below that of the MC-ASDs at about 1200-rpm drive speed. The reactive power curve produced by all MC-ASDs is nearly identical and appears to follow the typical reactive power curve for the motor in moving from an unloaded to a fully loaded condition.

It is important to also consider the ability to “control” the building power factor. The reactive power produced by the MC-ASD systems is the result of induction devices and is readily corrected through the addition of capacitance at the building electrical distribution level. The power factor generated by the VFD is the result of harmonics generated by the VFD electronics and is not easily corrected at either the building or drive level.

## Motor Bearing Temperature

The rise in motor bearing temperature and motor winding temperatures above ambient conditions was recorded during all tests and is shown in Appendix A. Figure 14 shows a plot of the motor bearing temperatures for the fan test.

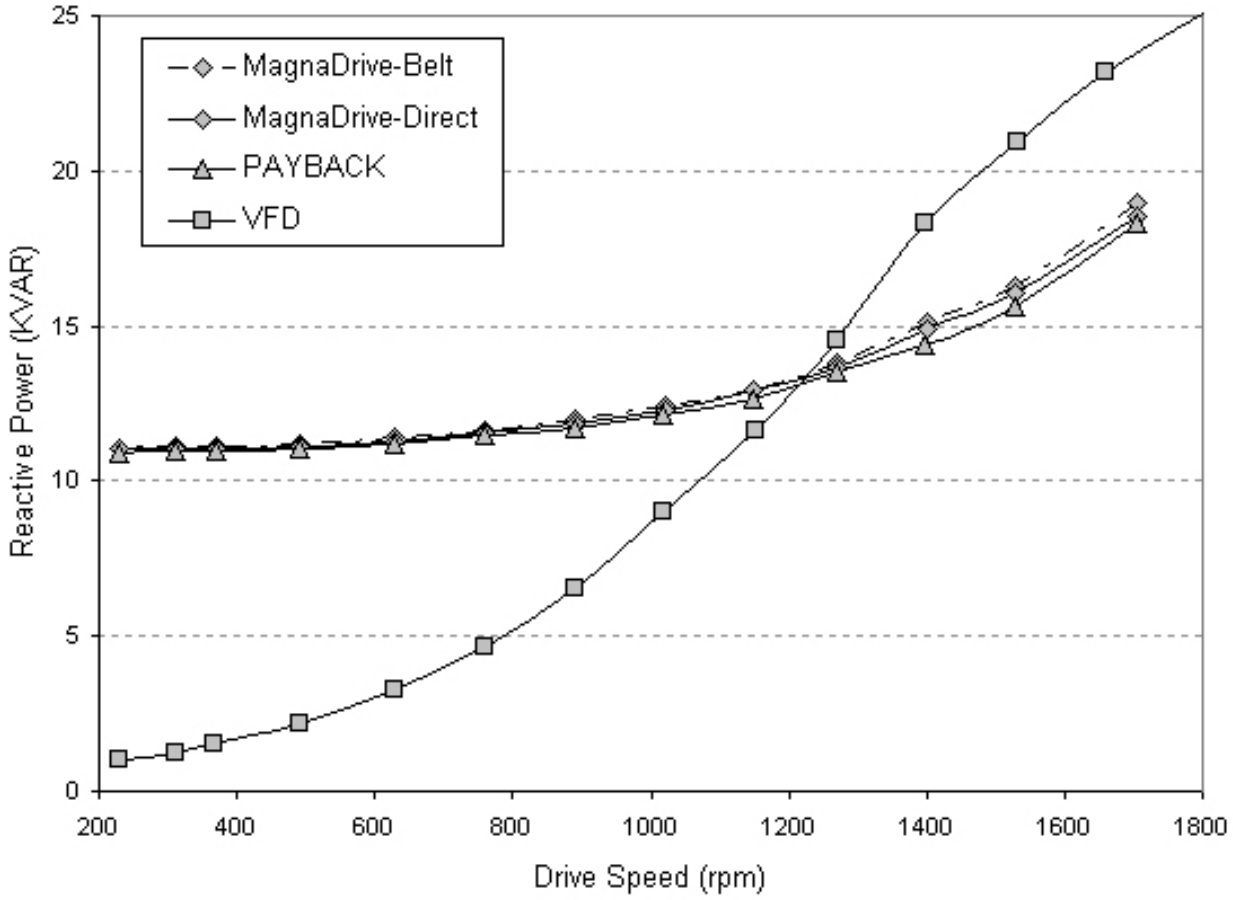


**Figure 13**. Reactive Power Generated by All VSDs During Fan Curve Test

For motor bearing temperatures, the highest temperature rises recorded were for the VFD as it approached full-load conditions. Below about 25% load, the temperatures recorded for the VFD test dropped below the PAYBACK Drive, but not below the MagnaDrive temperatures. Both MagnaDrive configurations reported essentially equivalent bearing temperatures at all speeds measured. Higher lateral loading of the motor bearing may occur with the PAYBACK Drive because it is supported on the motor shaft. This may result is somewhat higher bearing temperatures than recorded for the MagnaDrive configurations.

## Motor Winding Temperature

Motor winding temperature is often used as a predictor of insulation life in a motor. The rise in motor winding temperature above ambient was recorded for all tests and is shown in Appendix A. Variation of winding temperature rise with load was similar for all systems, with the lowest temperature rise being recorded for the PAYBACK Drive. Most importantly, the motor temperature did not exceed the allowed specifications of the motor in any of the test configurations.

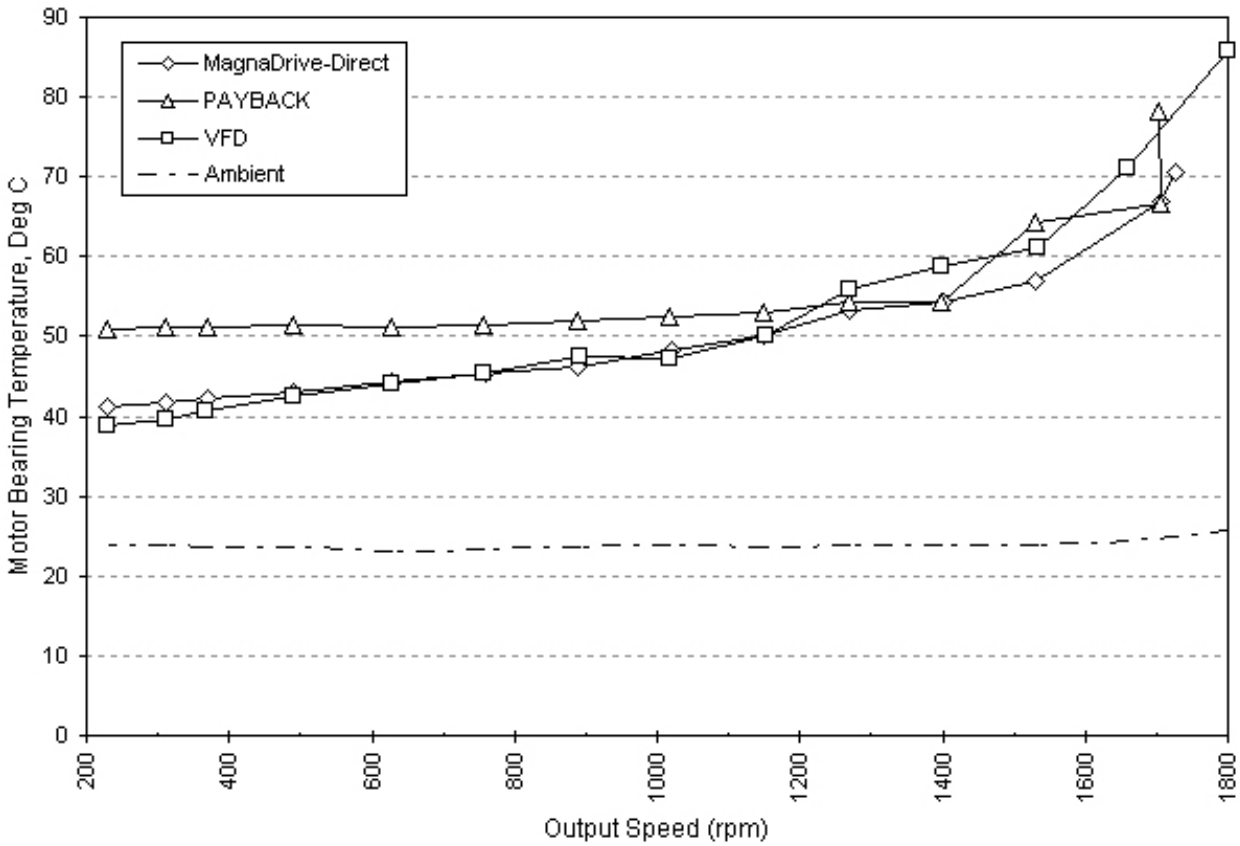


**Figure 14**. Motor Bearing Temperatures for Fan Test

## Conclusion

There are several factors that the test results highlighted. For all tests, the VFD was more efficient than the magnetically coupled drives at all speeds tested; however, the differences were relatively small at the highest speeds (above 1700 rpm). As drive speeds dropped, the power requirements of the MC-ASDs were higher than those of the VFD. At the lowest speeds, where the MC-ASDs are least efficient, the power consumption of the magnetically coupled drives was several times that of the VFD. However, because the total shaft power requirements at this speed were relatively low at this point, the magnitude of the power difference at low speed was relatively low (about 4.5 kW) in the worst case. The largest differences in power consumption were not at the lowest speeds but at the intermediate speeds. Typically, the largest difference (in magnitude) in power consumption between the VSD and the MC-ASDs was seen around 50% of full-load motor speed for the fan and low head pump curves.

In all tests, the PAYBACK Drive tested performed somewhat more efficiently than the MagnaDrive-Direct, typically saving the equivalent of 3 to 4% of the full-load power over the entire operating range. The MagnaDrive-Belt configurations also invariably used the equivalent of 1 to 2% of full-load power more than the MagnaDrive-Direct configuration. It is assumed that the latter is a product of belt losses, and the magnitude of the losses is consistent with typical 1 to 2% loss estimates of belts.

The choice between using the MagnaDrive in a direct- or belt-driven configuration is expected to be driven by the use of either a fan or pump in most cases. Most pumps are designed to operate at near the full-load motor speed (corresponding to synchronous speeds of 900, 1800, or 3600 rpm) in a direct-drive application and would be sized accordingly to meet peak loads. Most large fans, however, are typically designed to be operated as a belt and pulley-driven load, with the choice of pulleys used to fine-tune a particular fan size to the peak air flow needed. Because the full-load fan speed required for the system being retrofit is less likely to be near the nominal full-load motor speed, using a MagnaDrive-Direct configuration is likely to result in unacceptable levels of slip losses, and a MagnaDrive-Belt configuration (or PAYBACK) represents a more reasonable choice despite the pulley losses.

These test results highlight the importance of carefully considering the load profile when selecting the drive type (VFD or MC-ASD), as well as sizing the drive correctly for the right application. If a large portion of the time is spent below about 80% of full speed, the VFD would strongly outperform the magnetically coupled drives in terms of efficiency and expected energy savings. However, if the system operates primarily in the 80 to 100% of full flow range, the additional efficiency obtained from the VFD may be a relatively small fraction of total energy requirements. This significant drop in MC-ASD efficiency at lower speeds points out the importance of correctly sizing the fan or pump to just meet the peak system load at the peak speed obtainable with the drive, minimizing the number of hours spent at part-load speeds. This can be done by altering pulley ratios with a fan system or by impeller trimming in pump systems.

The test showed that the MagnaDrive used 1.5 to 2.3 kW more power than the PAYBACK Drive at any given power output. Although this difference between the PAYBACK Drive and MagnaDrive Coupling accounted for only a 5% difference in input power required at full load speed, it becomes a larger fraction of the power required at low speed. One possible explanation for this constant 2-kW difference may be windage (aerodynamic) losses in the MagnaDrive. In contrast with the PAYBACK, the MagnaDrive magnets are housed in an open unit (for cooling reasons), which could contribute to more aerodynamic drag, primarily on the motor side of the coupling, which turns at a constant high speed. It is noted that the MagnaDrive unit tested is one of the smallest units available, although it is relatively large for the load put on it. The MagnaDrive couplings are reported by MagnaDrive to perform more efficiently as the units get larger. As the size and torque transmission capabilities of the models increase, the aerodynamic (windage) losses would be expected to become a much smaller fraction of the total power transmitted through the unit.

# Savings Potential

Federal agencies are required to evaluate energy-related investments based on minimum life-cycle costs (10 CFR Part 436). A life-cycle cost (LCC) evaluation computes the total long-term costs of a number of potential actions, and selects the action that minimizes those long-term costs. Energy-saving retrofits should always be compared to a "do nothing" option that retains the existing equipment. This is often called the *baseline* condition. The LCC of a potential investment is the present value of all of the costs associated with the investment over time. The Building Life Cycle Cost (BLCC) program, developed by the National Institute of Standards and Technology, allows users to compare the life-cycle cost of several alternatives (see Appendix C for more detail).

It is important to note that although three ASD technologies were tested, the analysis sought to determine the benefits of each ASD in a retrofit application. Therefore, the baseline was a "do nothing" case, where an already existing motor is controlled by traditional speed control (valves, bypass loops, or no speed control). The performance of each speed control technology was compared to the "do nothing" base case.

## Life-Cycle Cost

To calculate the life-cycle cost for each technology, the following factors must be considered. These are the basic inputs into the BLCC program:

- **Install Cost.** The installed cost includes cost of equipment purchased and the labor required to install them. Equipment purchase prices are the current list prices as of January 2002 and will, of course, change over time. The labor for the installation assumes labor charges for local staff performing a typical 50-hp retrofit. In this analysis, the installed cost for the VFD does *not* include the motor replacement. Although using an inverter-duty motor is recommended for the life of the motor, it is not absolutely required.

- **Energy Cost.** Because the testing was performed without a specific city or region in mind, the energy cost was assumed to be $0.06 / kWh with no demand charges. Demand reduction was ignored because determining a good estimate for demand costs is problematic.

- **Energy Use.** The energy consumption for each drive systems was generated using the performance testing data from OSU and typical load profiles from QuikFan software. Details of the use of QuikFan are provided in Appendix C.

- **Maintenance Costs.** The long-term maintenance costs include routine maintenance such as lubrication, repair costs based on average failure times, and replacement parts at manufacturer recommended intervals. Estimating these costs proved difficult. Because the two MC-ASD technologies are relatively new, *expected* long-term costs for these drives are provided by the manufacturer (as previously described). Obtaining any long-term maintenance data for VFDs proved even more difficult, despite checking a number of sources. Conversations with in-field personnel

seem to indicate that a VFD would be unlikely to reach a 20-year service life without any additional service and/or replacement. Unfortunately, this information is largely anecdotal, with no solid data to substantiate these claims. Because of the lack of solid data, it was decided that long-term maintenance costs would be omitted from the economic analysis. This definitely skews the comparison because technologies like MC-ASD are designed with reduced maintenance costs in mind.

## Life-Cycle Results for Fan Application

The first sample system for the BLCC analysis is a typical 50-hp fan system, where speed control will be retrofit to an existing fan/blower combination. The fan system chosen operates 12 hours per day (Monday through Friday), 4 hours on Saturday and Sunday, with five holidays a year for a total of 3,476 hours per year (operating systems 24-hour per day would generate more savings). This represents a common application for buildings in the Federal sector. The study period for this analysis is 20 years (see Table 6).

**Table 6**. Fan Profile BLCC Analysis

| Equipment Type | Purchase Price | Install Cost | Energy Use[a] (kWh/yr) | Life-Cycle Cost | SIR[b] | AIRR[c] | Simple Payback |
|---|---|---|---|---|---|---|---|
| Base case | $ 0 | $ 0 | 109,133 | $ 94,229 | N/A | N/A | N/A |
| VFD | $ 8,582 | $ 1,000 | 41,013 | $ 44,995 | 6.74 | 13.64% | 2.4 years |
| MagnaDrive | $ 11,147 | $ 750 | 66,205 | $ 69,061 | 3.26 | 9.58% | 4.6 years |
| PAYBACK | $ 4,900 | $ 500 | 59,160 | $ 56,481 | 8.70 | 15.10% | 1.9 years |

(a) Energy consumption (kWh) per year based on test results over 20-year study period.
(b) Savings-to-Investment (SIR) ratio compares the investment for an alternative versus baseline. Higher numbers are better.
(c) Adjusted Internal Rate of Return (AIRR).

Energy use was calculated using the test results and QuikFan. QuikFan is an EnergyStar® software product designed to estimate the cost efficacy of retrofits on fan systems. QuikFan uses the performance curves of fan systems, typical or user supplied binned load profiles, and total hours of operation to estimate the total annual energy consumption for the same fan system with different drive systems or control applications. Default duty cycles representing typical fan systems were used to estimate annual energy consumption for the 50-hp motor used in testing. Figure B-1 in Appendix B shows the percentage of hours in each bin for this fan profile.

The baseline option required no initial investment. However, the expected energy use was 109,133 kWh/year, which is nearly double any of the alternatives. Over a period of 20 years, the life-cycle cost of operating the baseline case was $ 94,229. Compared to the baseline case of no speed control, any of the ASDs would be a smart retrofit with simple payback ranging from 1.9 to 4.6 years.

The VFD was the best performer in energy use at 41,013 kWh/year. The life-cycle cost of the VFD system was also best among the alternatives, with a life-cycle cost of $ 44,995. The SIR of the VFD alternative was 6.74 with a simple payback of 2.4 years. Even if $5,000 for the purchase of an inverter duty motor were added to the analysis, the life-cycle cost is still best at $50,395 with a simple payback of 3.9 years.

The MagnaDrive Coupling and the PAYBACK Drive were also excellent options compared to the base case, with life-cycle costs of $69,061 and $56,481, respectively. Although the VFD still performed more efficiently overall, these devices were competitive and may be more attractive given some of the additional benefits.

At 56,481 kWh/year, the PAYBACK Drive uses 45% less energy than the base case. With the lowest purchase and installation cost, it provides a simple payback of 1.9 years. The PAYBACK Drive had the best Savings-to-Investment (SIR) of 8.70, indicating that it provided good savings (although not the most savings) with the least initial investment. For retrofits that fit its inherent design, it appears to be the ideal choice.

Of the three alternatives, the MagnaDrive Coupling used the most energy, 66,205 kWh/year, or 39% less than the base case. At $11,147 it was also the most expensive to install among the alternatives. Even so, with a simple payback of 4.6 years, it can be an attractive option for certain retrofit applications on direct-driven loads, where operations and maintenance considerations (which were not considered in this analysis) are important. As previously mentioned, a 50-hp drive is at the low end of MagnaDrive Coupling range of applications. Larger size couplings benefit from economies-of-scale making the purchase price more competitive.

## MC-ASD for Pump Applications

Because the laboratory testing included load profiles for a low- and a high-head pump application, a life-cycle cost analysis for a pump application would seem like a natural next step. Test data could be used to compare the MC-ASDs to the VFD with little difficulty; however, constructing a good baseline scenario proved even more difficult than with the fan load profile. The load profiles provided for the test were based on previous work performed by OSU. Without explicitly defining the pump equipment and system characteristics ahead of time, it was simply too difficult to deduce what the baseline case would be without making a number of assumptions. Uncertainty in any of these assumptions would have a large impact on the projected savings over these baseline conditions. Pump applications would tend to favor the MC-ASDs (that are more efficient at higher speeds) because most typical pump load profiles (especially with a high static head) would tend to operate at or near full speed a greater percentage of time.

# The Technology in Perspective

Implementing speed control in motor systems represents an opportunity to gain additional control over system operations while yielding substantial energy savings. More traditional types of speed control (e.g., variable frequency drives) will continue to be a good option. This study has shown that the MC-ASDs will provide similar energy savings under most conditions. The MC-ASDs are flexible for a variety of applications and are an easy retrofit. The simplicity of these devices remains a strong selling point because installation, maintenance, and repair can all be performed in-house. The facilities that are using MC-ASDs have been happy with their performance and in most cases, have purchased additional units after their initial experience.

This document should be used to learn about the technology and provide an initial application guide to help determine which MC-ASD is best for a given application. Both manufacturers are willing to help with site-specific design questions and provide parts for a long period of time. Although the MC-ASD technologies are fairly new (less than 10 years old), both devices have been through several design iterations and have a well-established product. Both are expanding manufacturing operations and client base, which indicates that both will be around for some time.

# Additional Information

## References

"1999 Utility Incentive Guide." *Energy User News* Vol. 12, No. 8, August 1999.

10 CRF 436. "Code of Federal Regulations." January 1, 2001. Title 10—Energy, Chapter II-Department of Energy, Part 436-Federal Energy Management and Planning Programs.

47 CFR 2. "Code of Federal Regulations." Subpart J (901-1093) "Equipment Authorization Procedures." See http://www.fcc.gov/Bureaus/Engineering_Technology/Documents/cfr/1999/47cfr2.pdf.

Easton Consultants. 1999. "Market Assessment of MagnaDrive ASD." NWA-002. Northwest Energy Efficiency Alliance (NEEA), Portland, Oregon.

IEEE Standard 519-1992. "IEEE Recommended Practices and Requirements for Harmonic Control in Electrical Power Systems." IEEE, 1992.

Oregon State University. 2001. "Magnetically Coupled Adjustable-Speed Drive Study." Prepared for Pacific Northwest National Laboratory by Motor System Resource Facility, July.

U.S. DOE. 1998. "United States Industrial Motor Systems Market Opportunities Assessment." DOE 98-MCI. U.S. Department of Energy, Office of Industrial Technologies, Washington, D.C.

## Manufacturers

The U.S. Department of Energy and Pacific Northwest National Laboratory do not specifically endorse or sponsor the devices or manufacturers described in this study, other than to present the specific data collected during this study.

There are currently two manufacturers with products that fit the definition of MC-ASD technology that were demonstrated in this project.

Magna Force, Inc., a research and development company specializing in permanent rare-earth magnet power transmission equipment, has developed the Adjustable Speed Coupling System -ASCS PLUS™. This patented technology is licensed exclusively to MagnaDrive Corporation for manufacture, sales, and distribution. MagnaDrive markets the technology as the MagnaDrive Adjustable Speed Coupling System.

MagnaDrive Corporation
1600 Fairview Avenue East, Suite 303
Seattle, Washington 98102
General Office: (206) 336-5710
Fax: (206) 336-5727
E-mail: info@magnadrive.com
Web: http://www.magnadrive.com

Coyote Electronics, Inc. of Fort Worth, Texas is the developer of the PAYBACK® Variable Speed Drives. They are manufactured for Coyote under the following U.S. patent numbers: #5434461, #5446327, #5465018, #5627422, #5642012, #5650679, #5821658, #5898249, and/or other patents pending. Foreign patents have been issued in Canada, Mexico, China, Australia, and patents are pending in Europe.

Coyote Electronics, Inc.
4701 Old Denton Road
Fort Worth, Texas 76117
Phone: (817) 485-3336
Toll Free: (800) 811-3478 or (888) 557-7873
Fax: (817) 485-9437
E-mail: info@coyoteinc.com
Web: http://www.payback.com or http://coyoteinc.com

## Who is Using the Technology

The following is a partial list of sites that are currently using the MC-ASD technology. Only a few are listed for reference.

### Federal Sites

The PAYBACK Drive is currently being used in the Pentagon, Arlington, Virginia and in the Federal Aviation Administration (FAA) buildings in Houston and Dallas, Texas.

### Other Government Sites

The PAYBACK Drive is currently being used in the Montgomery County Courthouse, Montgomery, Alabama; the Texas State Capitol complex, Austin, Texas; the Police and Human Services Buildings, Reston, Virginia; and the Place de Hauteville Building, Quebec, Ontario.

The MagnaDrive Coupling is currently installed at the City of San Diego Water Department, San Diego, California; the Wilsonville Wastewater Treatment Facility, Wilsonville, Oregon; and Golden Valley Electric, Healey, Alaska.

## For Further Information

### Federal Program Contacts

The U.S. Department of Energy, Office of Industrial Technologies (OIT) has a motor page in the Best Practices section of their Web site, http://www.oit.doe.gov/bestpractices/motors/.

### User and Third Party Field and Lab Test Reports

The Northwest Energy Efficiency Alliance is a non-profit organization that promotes energy efficient products in the Northwest. They have performed testing on the MagnaDrive Coupling in cooperation with Oregon State University. The results of the testing can be requested from the Northwest Energy Efficiency Alliance or downloaded from http://www.nwalliance.org/.

> 00-048 Product Testing: MagnaDrive, No 1
> Special Report (3/00) http://www.nwalliance.org/resources/reports/00-048.pdf
> Executive Summary http://www.nwalliance.org/resources/reports/ES48.pdf
> Appendices are available by mail. Contact Phil Degens, E-mail: pdegens@nwalliance.org or call (800) 411-0834 ext. 271 with questions regarding this report.

## Awards

Industry Week (http://www.industryweek.com) selected the MagnaDrive Adjustable Speed Coupling System as one of the Technologies of the Year in the December 1, 2001 issue.

## Design and Installation Guides

A design and installation guide for the MagnaDrive Adjustable Speed Coupling System can be found on their Web site at http://www.magnadrive.com/ap-guide/apguide-intro.html, or is available upon request. Technical data about the PAYBACK Variable Speed Drive is also available on their Web site at http://www.payback.com.

## Technology Specification Sample

Each manufacturer provides a specific guide for assistance in procurement on their Web site. The specification guide for the MagnaDrive Adjustable Speed Coupling System can be found at http://www.magnadrive.com/ap-guide/app-section2-12.html. The specification guide for procuring the PAYBACK Variable Speed Drive is available at http://www.payback.com/guide.htm.

## Tools

### ASDMaster

ASDMaster is an adjustable speed drive evaluation and application software. This Windows software program helps you, as a plant or operations professional, determine the economic feasibility of an ASD application, predict how much electrical energy may be saved by using an ASD, and search a database of standard drives. The package includes two 3 1/2-inch diskettes, user's manual, and user's guide, and can be ordered from the Electric Power Research Institute (EPRI) or from Bonneville Power Administration (BPA). For more information, see the ASDMaster Web site at http://www.epri-peac.com/asdmaster/.

### QuickFan

QuikFan is an easy-to-use analysis tool that assesses the cost-effectiveness of upgrading variable air volume (VAV) systems. It provides screening-level analysis without complex building data. The primary focus of the software is the application of variable speed drives to fan motors. QuikFan also has options for high efficiency motor installation and static pressure reset.

QuikFan is produced by the Environmental Protection Agency (EPA) EnergyStar® program and can be downloaded from the following link,
http://yosemite1.epa.gov/estar/business.nsf/content/multiarea_tools_softwaretools_main.htm#QuikFan.

# Appendix A

# Adjustable Speed Drive and Test Data

# Appendix A

# Adjustable Speed Drive and Test Data

The following table shows the actual equipment tested during this study. These are nameplate data. The nameplate data for the three devices tested are provided in Table A-1. The manufacturer's nameplate data for the motor is provided in Table A-2. The results of the baseline motor testing are provided in Table A-3.

**Table A-1**. Adjustable Speed Drives Tested

| Variable Frequency Drive | MagnaDrive Coupling | PAYBACK Drive |
|---|---|---|
| **Manufacturer:** Allen Bradley<br>**Model:** 1336 Plus<br>**Catalog #** 1336-S-BO60-AA-EN-GM1-HA2-L6<br>**Serial No.:** MEAB 3XU9<br><br>**Input Ratings:**<br>**Phases**: 3 **Hz:** 60<br>**Volts:** 380 to 480 **Amps:** 93<br>**kVA:** 61 to 71<br><br>**Output Ratings:**<br>**Phases**: 3 **Hz:** 0 to 400<br>**Volts:** 0 to 480 **Amps:** 96<br>**kVA:** 76 | **Manufacturer:** MagnaDrive<br>**Model:** 14.5H<br>**Serial No.:** 2 | **Manufacturer:** Coyote Electronics<br>**Model:** Easy-5XE-9.0<br>**Serial No.:** P8025 |

**Table A-2**. Test Motor Description

| Data for Test Motor |
|---|
| **Manufacturer:** US Electric Motors/Emerson |
| **Model:** R159A **Catalog #:** 8P50P2C |
| **Shaft End BRG:** 55BCO3X3 |
| **Opp. End BRG:** 55BCO3X3 |
| **Phases**: 3 **Max Ambient:** 40°C |
| **ID#** C06-R159A-N |
| **Insulation Class:** F **Duty:** Continuous |
| **Wt:** 610 lb **Bal:** 0.08 IPS |
| **HP:** 50 **RPM:** 1775 **SF:** 1.15 **Hz:** 60 |
| **Volts:** 460 **Amps:** 57.5 **Max kVAr:** 9.3 |
| **Code:** F **Design:** B |
| **NEMA Nom Efficiency:** 94.1 |
| **Guaranteed Efficiency:** 93.0 |
| **¾ Load Efficiency:** 95.0 |
| **Power Factor:** 88.5 |

**Table A-3**. Base Motor Performance Test Data Performed Under IEEE Standard 112-1991 (Input Output Test of Induction Machine)

| Test Point | 1 | 2 | 3 | 4 | 5 | 6 |
|---|---|---|---|---|---|---|
| **Load (% rated)** | 120 | 110 | 100 | 75 | 50 | 25 |
| **Speed, rpm** | 1758 | 1765 | 1771 | 1781 | 1789 | 1794 |
| **Torque, Nm** | 241.5 | 221.4 | 201.3 | 150.0 | 97.8 | 50.1 |
| **Shaft Power, hp** | 59.61 | 54.87 | 50.04 | 37.51 | 24.56 | 12.62 |
| **Stator (Input) Power kW** | 48.56 | 44.34 | 40.28 | 29.74 | 19.52 | 10.29 |
| **Efficiency, %** | 91.55 | 92.28 | 92.64 | 94.04 | 93.83 | 91.49 |
| **Line Current, Amps** | 67.8 | 62.1 | 56.0 | 42.1 | 29.4 | 19.3 |
| **Power Factor** | 89.9 | 90.0 | 89.9 | 88.4 | 83.2 | 66.8 |
| **Reactive Power, kVAR** | 23.65 | 21.47 | 19.62 | 15.73 | 13.01 | 11.46 |

The complete results of the laboratory testing are provided on the next pages, as shown in Tables A-4 through A-15.

**Table A-4**. VFD Fan Curve Test Results

| Meas. Point | Target Torque Nm | Target Speed rpm | Torque Dyno Nm | Speed Dyno rpm | Power Dyno kW | Freq. Hz | Motor Input Volts | Motor Input Volt | Motor Input Amps | Motor Input kW | Motor Powerfact. pf | Motor Input THD V | Motor Input THD A | ASD Input Volts | ASD Input Amps | ASD Input kW |
|---|---|---|---|---|---|---|---|---|---|---|---|---|---|---|---|---|
| 1 | 197.9 | 1800 | 197.9 | 1799 | 37.28 | 60.97 | 485.9 | 462.1 | 55.91 | 40.02 | 0.850 | 32.6 | 16.7 | 460.3 | 60.56 | 41.33 |
| 2 | 168.7 | 1659 | 168.7 | 1659 | 29.31 | 56.13 | 458.2 | 424.3 | 47.95 | 31.32 | 0.823 | 40.9 | 15.5 | 459.0 | 49.77 | 32.11 |
| 3 | 143.6 | 1530 | 143.8 | 1533 | 23.08 | 51.69 | 424.5 | 390.3 | 40.88 | 24.47 | 0.814 | 42.7 | 10.5 | 461.1 | 41.28 | 25.48 |
| 4 | 123.2 | 1400 | 123.3 | 1399 | 18.06 | 47.13 | 393.4 | 355.5 | 35.69 | 19.14 | 0.787 | 47.4 | 10.9 | 461.6 | 33.98 | 20.11 |
| 5 | 99.1 | 1270 | 99.8 | 1269 | 13.26 | 42.71 | 365.3 | 321.5 | 30.09 | 14.13 | 0.742 | 53.8 | 12.2 | 462.0 | 26.00 | 14.88 |
| 6 | 81.8 | 1150 | 81.8 | 1152 | 9.87 | 38.72 | 340.2 | 291.1 | 25.99 | 10.58 | 0.691 | 60.5 | 12.8 | 460.7 | 20.24 | 11.24 |
| 7 | 65.5 | 1020 | 65.5 | 1018 | 6.98 | 34.2 | 311.5 | 256.6 | 22.42 | 7.53 | 0.623 | 68.8 | 13.4 | 460.5 | 15.25 | 8.14 |
| 8 | 50.2 | 890 | 49.9 | 892 | 4.66 | 29.93 | 281.8 | 224.2 | 19.11 | 5.04 | 0.539 | 76.4 | 14.2 | 460.1 | 10.73 | 5.55 |
| 9 | 36.7 | 759 | 36.6 | 758 | 2.91 | 25.41 | 248.5 | 189.8 | 16.87 | 3.20 | 0.441 | 84.6 | 15.5 | 460.6 | 7.44 | 3.67 |
| 10 | 25.8 | 629 | 25.7 | 628 | 1.69 | 21.05 | 212.9 | 156.6 | 15.04 | 1.94 | 0.344 | 92.1 | 14.4 | 460.7 | 5.03 | 2.35 |
| 11 | 16.2 | 490 | 16.4 | 490 | 0.84 | 16.42 | 173.6 | 123.2 | 14.26 | 1.04 | 0.244 | 99.2 | 12.2 | 460.9 | 3.27 | 1.44 |
| 12 | 9.8 | 370 | 9.9 | 368 | 0.38 | 12.34 | 133.7 | 92.4 | 13.68 | 0.54 | 0.173 | 104.6 | 9.7 | 461.1 | 2.21 | 0.91 |
| 13 | 7.4 | 310 | 7.4 | 311 | 0.24 | 10.42 | 114.1 | 78.0 | 13.65 | 0.36 | 0.139 | 106.7 | 9.9 | 460.9 | 1.82 | 0.73 |
| 14 | 4.7 | 230 | 4.7 | 230 | 0.11 | 7.73 | 85.5 | 57.7 | 13.75 | 0.24 | 0.114 | 109.4 | 11.7 | 461.1 | 1.48 | 0.58 |

| Meas. Point | ASD Powerfactor pf | ASD THD V % | ASD THD A % | Efficiency motor | Efficiency drive | Efficiency overall | Temp Ambient C | Temp Bearing C | Temp Case C | Temp Windings C | Vibration horizontal Vh(IPs) | Vibration vertical Vv(IPS) | Vibration axial Va(IPS) | Sound dB | Winding Res. ohm |
|---|---|---|---|---|---|---|---|---|---|---|---|---|---|---|---|
| 1 | 0.855 | 3.5 | 58.3 | 0.932 | 0.968 | 0.902 | 25.7 | 85.7 | 52.6 | 93.4 | 0.0389 | 0.0404 | 0.0308 | 75.2 | 211 |
| 2 | 0.811 | 3.4 | 69.5 | 0.936 | 0.975 | 0.913 | 24.3 | 71.1 | 46.0 | 77.1 | 0.0489 | 0.0318 | 0.0423 | 72.6 | 200 |
| 3 | 0.773 | 3.2 | 78.4 | 0.943 | 0.960 | 0.906 | 24.0 | 61.1 | 41.9 | 66.2 | 0.0370 | 0.0321 | 0.0625 | 73.0 | 193 |
| 4 | 0.740 | 3.3 | 87.6 | 0.944 | 0.952 | 0.898 | 23.9 | 58.9 | 41.6 | 61.5 | 0.0244 | 0.0364 | 0.0944 | 72.6 | 190 |
| 5 | 0.715 | 3.3 | 95.2 | 0.938 | 0.950 | 0.891 | 23.8 | 55.8 | 39.6 | 58.4 | 0.0130 | 0.0274 | 0.0330 | 72.5 | 188 |
| 6 | 0.696 | 3.3 | 102.0 | 0.933 | 0.941 | 0.878 | 23.5 | 50.0 | 37.3 | 53.7 | 0.0257 | 0.0219 | 0.0317 | 72.0 | 185 |
| 7 | 0.669 | 3.4 | 111.0 | 0.928 | 0.924 | 0.858 | 24.0 | 47.1 | 37.3 | 49.0 | 0.0467 | 0.0286 | 0.0159 | 72.3 | 182 |
| 8 | 0.649 | 2.8 | 116.6 | 0.925 | 0.907 | 0.839 | 23.6 | 47.5 | 37.6 | 50.6 | 0.0272 | 0.0306 | 0.0182 | 72.3 | 183 |
| 9 | 0.618 | 3.0 | 127.9 | 0.907 | 0.872 | 0.791 | 23.3 | 45.4 | 36.6 | 44.4 | 0.0183 | 0.0125 | 0.0130 | 71.8 | 179 |
| 10 | 0.586 | 3.1 | 140.4 | 0.870 | 0.825 | 0.718 | 23.2 | 44.1 | 36.6 | 42.8 | 0.0140 | 0.0186 | 0.0118 | 71.3 | 178 |
| 11 | 0.550 | 3.2 | 154.7 | 0.807 | 0.726 | 0.586 | 23.6 | 42.4 | 36.5 | 41.3 | 0.0144 | 0.0183 | 0.0118 | 70.8 | 177 |
| 12 | 0.514 | 3.3 | 170.5 | 0.707 | 0.595 | 0.420 | 23.7 | 40.6 | 36.4 | 41.3 | 0.0136 | 0.0175 | 0.0102 | 70.5 | 177 |
| 13 | 0.502 | 3.3 | 176.1 | 0.662 | 0.499 | 0.330 | 23.8 | 39.7 | 36.3 | 39.7 | 0.0128 | 0.0168 | 0.0071 | 70.6 | 176 |
| 14 | 0.490 | 3.4 | 182.3 | 0.479 | 0.407 | 0.195 | 23.9 | 38.8 | 36.4 | 39.7 | 0.0123 | 0.0169 | 0.0067 | 71.1 | 176 |

**Table A-5**. VFD Low-Head Pump Curve Test Results

| Meas. Point | Target Torque Nm | Target Speed rpm | Torque Dyno Nm | Speed Dyno rpm | Power Dyno kW | Freq. Hz | Motor Input Volts | Motor Input Volt | Motor Input Amps | Motor Input kW | Motor Powerfact. pf | Motor Input THD V | Motor Input THD A | ASD Input Volts | ASD Input Amps | ASD Input kW |
|---|---|---|---|---|---|---|---|---|---|---|---|---|---|---|---|---|
| 1 | 230.0 | 1800 | 230.9 | 1799 | 43.50 | 61.26 | 487.2 | 465.2 | 65.22 | 47.05 | 0.854 | 31.2 | 17.4 | 460.5 | 69.21 | 48.60 |
| 2 | 201.0 | 1698 | 201 | 1699 | 35.76 | 57.6 | 468.6 | 434.3 | 56.25 | 38.13 | 0.835 | 40.5 | 10.2 | 461.1 | 58.27 | 39.55 |
| 3 | 167.8 | 1531 | 167.8 | 1531 | 26.90 | 51.8 | 426.3 | 392.4 | 46.77 | 28.49 | 0.825 | 42.4 | 9.5 | 459.6 | 46.54 | 29.74 |
| 4 | 137.6 | 1363 | 137.6 | 1363 | 19.64 | 45.99 | 386.4 | 247.9 | 39.21 | 20.87 | 0.794 | 48.3 | 10.0 | 461.1 | 36.55 | 21.85 |
| 5 | 108.0 | 1173 | 108 | 1172 | 13.26 | 39.51 | 345.9 | 298.3 | 32.07 | 14.14 | 0.736 | 58.6 | 12.5 | 462.0 | 26.08 | 14.91 |
| 6 | 83.6 | 990 | 83.6 | 990 | 8.67 | 33.31 | 305.9 | 250.9 | 25.63 | 8.83 | 0.649 | 69.9 | 19.2 | 460.2 | 17.58 | 9.94 |
| 7 | 64.0 | 803 | 64.2 | 803 | 5.40 | 27.03 | 262.2 | 201.2 | 22.29 | 5.90 | 0.585 | 81.3 | 12.2 | 460.0 | 12.48 | 6.47 |
| 8 | 48.4 | 608 | 47.9 | 608 | 3.05 | 20.48 | 209.6 | 153.8 | 18.84 | 3.36 | 0.491 | 92.7 | 12.4 | 459.7 | 7.82 | 3.82 |
| 9 | 36.4 | 429 | 36.6 | 430 | 1.65 | 14.48 | 158.0 | 109.9 | 17.01 | 1.87 | 0.402 | 101.9 | 11.6 | 460.6 | 4.97 | 2.28 |
| 10 | 28.9 | 284 | 29.1 | 284 | 0.87 | 9.59 | 107.4 | 73.0 | 16.05 | 1.02 | 0.340 | 108.0 | 10.1 | 460.1 | 3.18 | 1.37 |

| Meas. Point | ASD Powerfact pf | ASD THD V % | ASD THD A % | Efficiency motor | Efficiency drive | Efficiency overall | Temp Ambient C | Temp Bearing C | Temp Case C | Temp Windings C | Vibration horizontal Vh(IPS) | Vibration vertical Vv(IPS) | Vibration axial Va(IPS) | Sound dB | Winding Res. ohm |
|---|---|---|---|---|---|---|---|---|---|---|---|---|---|---|---|
| 1 | 0.880 | 3.5 | 51.9 | 0.925 | 0.968 | 0.895 | 25.0 | 98.2 | 59.8 | 117.6 | 0.0398 | 0.0306 | 0.0303 | 74.3 | 226 |
| 2 | 0.849 | 3.4 | 59.6 | 0.938 | 0.964 | 0.904 | 24.5 | 79.6 | 50.4 | 97.3 | 0.0288 | 0.0242 | 0.0341 | 74.4 | 213 |
| 3 | 0.802 | 3.2 | 71.1 | 0.944 | 0.958 | 0.905 | 24.4 | 69.3 | 46.3 | 80.2 | 0.0359 | 0.0335 | 0.0632 | 73.3 | 202 |
| 4 | 0.748 | 3.3 | 85.0 | 0.941 | 0.955 | 0.899 | 24.0 | 60.0 | 42.4 | 72.4 | 0.0241 | 0.0322 | 0.0749 | 72.5 | 197 |
| 5 | 0.714 | 3.4 | 95.5 | 0.938 | 0.948 | 0.889 | 24.1 | 55.7 | 40.7 | 59.9 | 0.0282 | 0.0258 | 0.0361 | 72.1 | 189 |
| 6 | 0.677 | 3.3 | 107.9 | 0.981 | 0.888 | 0.872 | 23.8 | 48.4 | 38.0 | 53.7 | 0.0578 | 0.0275 | 0.0142 | 71.7 | 185 |
| 7 | 0.650 | 3.4 | 117.4 | 0.915 | 0.912 | 0.834 | 24.7 | 46.4 | 38.3 | 42.8 | 0.0235 | 0.0251 | 0.0156 | 71.8 | 178 |
| 8 | 0.613 | 3.6 | 130.8 | 0.908 | 0.879 | 0.798 | 24.2 | 44.0 | 37.8 | 45.9 | 0.0130 | 0.0082 | 0.0072 | 71.3 | 180 |
| 9 | 0.574 | 3.7 | 145.5 | 0.883 | 0.820 | 0.724 | 24.0 | 40.8 | 36.7 | 42.8 | 0.0131 | 0.0161 | 0.0105 | 71.2 | 178 |
| 10 | 0.541 | 3.8 | 159.4 | 0.851 | 0.741 | 0.631 | 23.9 | 38.7 | 36.7 | 41.3 | 0.0122 | 0.0145 | 0.0087 | 70.9 | 177 |

**Table A-6**. VFD High-Head Pump Curve Test Results

| Meas. Point | Target Torque Nm | Target Speed rpm | Torque Dyno Nm | Speed Dyno rpm | Power Dyno kW | Freq. Hz | Motor Input Volts | Motor Input Volt | Motor Input Amps | Motor Input kW | Motor Powerfact. pf | Motor Input THD V | Motor Input THD A | ASD Input Volts | ASD Input Amps | ASD Input kW |
|---|---|---|---|---|---|---|---|---|---|---|---|---|---|---|---|---|
| 1 | 200.4 | 1749 | 197.9 | 1751 | 36.29 | 59.36 | 478.9 | 448.9 | 55.50 | 38.89 | 0.844 | 37.2 | 10.8 | 458.3 | 59.45 | 40.21 |
| 2 | 165.1 | 1575 | 166 | 1579 | 27.45 | 53.42 | 438.0 | 404.3 | 47.17 | 29.55 | 0.826 | 41.7 | 10.9 | 460.6 | 47.86 | 30.81 |
| 3 | 132.9 | 1400 | 134.2 | 1403 | 19.72 | 47.33 | 394.8 | 357.4 | 38.37 | 20.92 | 0.797 | 46.8 | 10.1 | 461.2 | 36.64 | 21.91 |
| 4 | 107.3 | 1225 | 107.1 | 1225 | 13.74 | 41.27 | 355.9 | 311.3 | 31.95 | 14.75 | 0.748 | 55.4 | 10.6 | 458.8 | 27.29 | 15.55 |
| 5 | 92.6 | 1177 | 92.6 | 1176 | 11.40 | 39.71 | 345.6 | 297.9 | 28.43 | 12.19 | 0.714 | 58.7 | 13.6 | 460.7 | 22.80 | 12.88 |
| 6 | 80.6 | 1113 | 80.6 | 1116 | 9.42 | 37.5 | 332.6 | 281.9 | 25.60 | 10.05 | 0.682 | 62.5 | 12.3 | 460.3 | 19.40 | 10.70 |
| 7 | 72.6 | 1079 | 72.6 | 1079 | 8.20 | 36.25 | 324.5 | 272.2 | 23.90 | 8.82 | 0.656 | 64.9 | 12.8 | 460.2 | 17.42 | 9.45 |
| 8 | 67.8 | 1031 | 67.8 | 1030 | 7.31 | 34.61 | 314.0 | 259.8 | 22.92 | 7.84 | 0.633 | 67.9 | 13.1 | 460.8 | 15.82 | 8.51 |
| 9 | 62.0 | 968 | 62 | 969 | 6.29 | 32.55 | 300.4 | 244.1 | 21.69 | 6.85 | 0.604 | 71.7 | 13.7 | 459.9 | 11.50 | 7.43 |
| 10 | 59.3 | 918 | 59.4 | 920 | 5.72 | 30.92 | 289.5 | 232.0 | 21.18 | 6.22 | 0.586 | 74.7 | 14.5 | 460.0 | 13.07 | 6.80 |
| 11 | 59.3 | 800 | 59.2 | 799 | 4.95 | 26.87 | 260.8 | 201.9 | 21.02 | 5.36 | 0.565 | 81.7 | 12.6 | 459.8 | 11.53 | 5.90 |
| 12 | 59.3 | 600 | 59.2 | 597 | 3.70 | 20.12 | 207.5 | 151.8 | 20.94 | 4.01 | 0.532 | 93.2 | 11.5 | 460.1 | 9.09 | 4.50 |
| 13 | 59.3 | 400 | 58.9 | 402 | 2.48 | 13.64 | 150.6 | 104.9 | 20.94 | 2.76 | 0.503 | 103.0 | 9.9 | 460.2 | 6.71 | 3.18 |
| 14 | 59.3 | 250 | 59.3 | 253 | 1.57 | 8.65 | 100.6 | 67.8 | 21.36 | 1.82 | 0.491 | 109.5 | 9.2 | 460.2 | 4.83 | 2.21 |

| Meas. Point | ASD Powerfact pf | ASD THD V % | ASD THD A % | Efficiency motor | Efficiency drive | Efficiency overall | Temp Ambient C | Temp Bearing C | Temp Case C | Temp Windings C | Vibration horizontal Vh(IPS) | Vibration vertical Vv(IPS) | Vibration axial Va(IPS) | Sound dB | Winding Res. |
|---|---|---|---|---|---|---|---|---|---|---|---|---|---|---|---|
| 1 | 0.852 | 3.4 | 59.2 | 0.933 | 0.967 | 0.902 | 25.5 | 85.1 | 52.7 | 88.0 | 0.0411 | 0.0298 | 0.0303 | 75.0 | 207.0 |
| 2 | 0.806 | 3.2 | 70.2 | 0.929 | 0.959 | 0.891 | 24.0 | 70.4 | 46.3 | 78.2 | 0.0541 | 0.0289 | 0.0413 | 73.3 | 200.7 |
| 3 | 0.748 | 3.3 | 85.0 | 0.942 | 0.955 | 0.900 | 23.0 | 59.6 | 41.9 | 66.0 | 0.0284 | 0.0401 | 0.1065 | 73.8 | 192.9 |
| 4 | 0.716 | 3.5 | 94.7 | 0.931 | 0.949 | 0.884 | 24.4 | 57.2 | 40.7 | 57.6 | 0.0266 | 0.0240 | 0.0300 | 72.9 | 187.5 |
| 5 | 0.708 | 3.0 | 97.8 | 0.935 | 0.946 | 0.885 | 23.8 | 53.1 | 38.3 | 52.6 | 0.0278 | 0.0258 | 0.0359 | 72.2 | 184.3 |
| 6 | 0.691 | 3.2 | 103.4 | 0.938 | 0.939 | 0.880 | 24.0 | 49.4 | 37.5 | 50.9 | 0.0203 | 0.0266 | 0.0276 | 72.0 | 183.2 |
| 7 | 0.680 | 3.1 | 107.1 | 0.931 | 0.933 | 0.868 | 24.1 | 48.3 | 37.3 | 48.9 | 0.0293 | 0.0255 | 0.0204 | 71.6 | 181.9 |
| 8 | 0.673 | 3.3 | 109.6 | 0.933 | 0.921 | 0.860 | 24.3 | 47.4 | 37.1 | 48.6 | 0.0389 | 0.0316 | 0.0167 | 71.8 | 181.7 |
| 9 | 0.662 | 3.5 | 113.4 | 0.919 | 0.922 | 0.847 | 24.6 | 47.0 | 37.5 | 47.6 | 0.0665 | 0.0255 | 0.0203 | 71.6 | 181.1 |
| 10 | 0.653 | 3.5 | 116.6 | 0.920 | 0.914 | 0.841 | 24.5 | 46.6 | 37.6 | 48.4 | 0.0444 | 0.0302 | 0.0204 | 71.5 | 181.6 |
| 11 | 0.642 | 3.6 | 120.5 | 0.923 | 0.909 | 0.840 | 24.3 | 46.0 | 37.9 | 48.6 | 0.0207 | 0.0235 | 0.0166 | 72.3 | 181.7 |
| 12 | 0.620 | 3.8 | 128.5 | 0.923 | 0.892 | 0.823 | 24.3 | 44.1 | 38.6 | 46.9 | 0.0141 | 0.0177 | 0.0120 | 71.8 | 180.6 |
| 13 | 0.595 | 3.8 | 137.7 | 0.900 | 0.866 | 0.779 | 23.9 | 42.8 | 39.5 | 45.3 | 0.0148 | 0.0169 | 0.0108 | 71.1 | 179.6 |
| 14 | 0.573 | 3.7 | 146.4 | 0.861 | 0.826 | 0.711 | 23.9 | 40.7 | 40.3 | 45.3 | 0.0203 | 0.0151 | 0.0082 | 70.6 | 179.6 |

**Table A-7**. PAYBACK Fan Curve Test Results

| Meas. Point | Target Torque Nm | Target Speed Dyno | Temp Bearing C | Temp Case C | Temp Ambient C | Torque Dyno Nm | Speed Dyno rpm | Power kW | Speed Coyote rpm | Speed Motor rpm | Motor Input Volts | Motor Input Amps | Motor Input kW |
|---|---|---|---|---|---|---|---|---|---|---|---|---|---|
| 1 | 197.7 | 1800 | 78.2 | 58.3 | 26.0 | 193.2 | 1702 | 34.43 | 1711 | 1771 | 459.2 | 55.54 | 39.66 |
| 2 | 178 | 1705 | 66.6 | 53.6 | 26.4 | 176.9 | 1706 | 31.60 | 1714 | 1775 | 460.1 | 50.91 | 36.30 |
| 3 | 143.6 | 1530 | 64.4 | 49.4 | 26.7 | 142.3 | 1530 | 22.80 | 1536 | 1781 | 459.6 | 41.42 | 29.11 |
| 4 | 123.2 | 1400 | 54.4 | 41.7 | 26.5 | 119.5 | 1398 | 17.49 | 1400 | 1785 | 459 | 35.96 | 24.74 |
| 5 | 99.08 | 1270 | 54.2 | 40.7 | 26.5 | 99.09 | 1271 | 13.19 | 1272 | 1787 | 460.8 | 31.03 | 20.83 |
| 6 | 81.8 | 1150 | 53.1 | 40.3 | 26.6 | 81.3 | 1150 | 9.79 | 1152 | 1789 | 460.9 | 26.94 | 17.37 |
| 7 | 65.5 | 1020 | 52.6 | 39.3 | 26.6 | 64.6 | 1019 | 6.89 | 1020 | 1792 | 461.2 | 23.02 | 13.88 |
| 8 | 50.18 | 890 | 52.0 | 38.6 | 26.6 | 50.1 | 890 | 4.67 | 890 | 1793 | 460.4 | 20.33 | 11.29 |
| 9 | 36.66 | 759 | 51.4 | 38.1 | 26.5 | 38.1 | 758 | 3.02 | 758 | 1795 | 461.3 | 18.24 | 9.04 |
| 10 | 25.76 | 629 | 51.2 | 37.5 | 26.8 | 25.7 | 629 | 1.69 | 629 | 1796 | 460.2 | 16.24 | 6.61 |
| 11 | 16.23 | 490 | 51.5 | 37.1 | 26.6 | 16.2 | 491 | 0.83 | 490 | 1797 | 460.9 | 15.06 | 4.80 |
| 12 | 9.84 | 370 | 51.2 | 36.7 | 26.5 | 9.9 | 371 | 0.38 | 371 | 1798 | 461.4 | 14.42 | 3.56 |
| 13 | 7.44 | 310 | 51.1 | 36.4 | 26.5 | 8.3 | 311 | 0.27 | 311 | 1798 | 460.8 | 14.23 | 3.16 |
| 14 | 4.73 | 230 | 50.8 | 36.2 | 26.4 | 4.8 | 230 | 0.12 | 231 | 1799 | 461 | 13.91 | 2.34 |

| Meas. Point | Motor Powerfact pf | Motor THD V % | Motor THD A % | Coyote Input Volts | Coyote Input Amps | Coyote Coil W | Coyote Coil pf | Vibration Horiz. Vh (IPS) | Sound dB | Winding Res. (1-2) | Winding Res. (1-3) | Winding Res. (2-3) | Efficiency % | kVAR |
|---|---|---|---|---|---|---|---|---|---|---|---|---|---|---|
| 1 | 0.897 | 3.47 | 4.213 | 456.5 | 0.4002 | 85.75 | 0.469 | 0.0472 | 75.3 | 200.2 | 200.4 | 201.6 | 86.82 | 19.71 |
| 2 | 0.894 | 3.66 | 4.763 | 457.5 | 0.2779 | 56.31 | 0.443 | 0.0411 | 75.2 | 195.0 | 195.2 | 196.3 | 87.06 | 18.31 |
| 3 | 0.882 | 3.61 | 5.913 | 457.3 | 0.1310 | 24.00 | 0.403 | 0.0464 | 74.8 | 190.6 | 190.6 | 191.7 | 78.32 | 15.61 |
| 4 | 0.865 | 3.68 | 6.310 | 457.6 | 0.1282 | 23.64 | 0.403 | 0.0000 | 74.5 | 183.5 | 183.7 | 184.8 | 70.71 | 14.40 |
| 5 | 0.840 | 3.72 | 7.649 | 459.7 | 0.1250 | 22.99 | 0.399 | 0.0358 | 74.4 | 182.3 | 182.5 | 183.6 | 63.32 | 13.51 |
| 6 | 0.810 | 3.72 | 8.430 | 460.1 | 0.1190 | 21.86 | 0.396 | 0.0356 | 73.0 | 181.4 | 181.5 | 182.6 | 56.37 | 12.63 |
| 7 | 0.754 | 3.78 | 9.830 | 460.1 | 0.1130 | 20.54 | 0.391 | ?0.0128 | 73.8 | 180.4 | 180.6 | 181.7 | 49.66 | 12.14 |
| 8 | 0.696 | 3.52 | 10.180 | 459.0 | 0.1070 | 19.19 | 0.389 | 0.0348 | 72.5 | 179.7 | 179.9 | 181.0 | 41.36 | 11.69 |
| 9 | 0.620 | 3.71 | 12.200 | 460.6 | 0.1030 | 18.18 | 0.387 | 0.0350 | 73.6 | 179.2 | 179.4 | 180.4 | 33.45 | 11.49 |
| 10 | 0.510 | 3.88 | 12.160 | 459.3 | 0.0956 | 16.64 | 0.379 | 0.0364 | 73.7 | 178.7 | 178.8 | 179.8 | 25.61 | 11.19 |
| 11 | 0.399 | 3.80 | 12.350 | 460.0 | 0.0900 | 15.42 | 0.372 | 0.0374 | 74.3 | 178.2 | 178.4 | 179.5 | 17.34 | 11.08 |
| 12 | 0.309 | 3.92 | 10.910 | 460.4 | 0.0853 | 14.46 | 0.368 | 0.0372 | 74.6 | 177.9 | 178.0 | 179.1 | 10.80 | 11.00 |
| 13 | 0.278 | 3.87 | 10.780 | 459.7 | 0.0836 | 14.08 | 0.365 | 0.0344 | 75.4 | 177.6 | 177.8 | 178.8 | 8.55 | 10.97 |
| 14 | 0.210 | 4.00 | 9.258 | 460.2 | 0.0792 | 13.38 | 0.365 | 0.0333 | 76.2 | 177.4 | 177.6 | 178.7 | 4.95 | 10.91 |

**Table A-8**. PAYBACK Low-Head Pump Curve Test Results

| Meas. Point | Target Torque Nm | Target Speed Dyno | Temp Bearing C | Temp Case C | Temp Ambient C | Torque Dyno Nm | Speed Dyno rpm | Power Dyno kW | Speed Coyote rpm | Speed Motor rpm | Motor Input Volts | Motor Input Amps | Motor Input kW |
|---|---|---|---|---|---|---|---|---|---|---|---|---|---|
| 1 | 206 | 1705 | 74.4 | 57.4 | 26.0 | 189.1 | 1705 | 33.76 | 1714 | 1773 | 460.5 | 54.15 | 38.72 |
| 2 | 167.8 | 1531 | 66.6 | 51.3 | 26.7 | 166.9 | 1531 | 26.76 | 1537 | 1777 | 460.5 | 47.59 | 33.84 |
| 3 | 137.6 | 1363 | 62.7 | 47.5 | 26.8 | 135.5 | 1363 | 19.34 | 1367 | 1782 | 459.7 | 36.93 | 27.70 |
| 4 | 108 | 1173 | 59.3 | 44.5 | 27.0 | 107.7 | 1173 | 13.23 | 1175 | 1787 | 460.1 | 32.74 | 22.24 |
| 5 | 83.6 | 990 | 57.6 | 42.5 | 26.9 | 83.6 | 990 | 8.67 | 991 | 1790 | 461.1 | 27.28 | 17.71 |
| 6 | 64.0 | 803 | 55.4 | 40.3 | 27.0 | 63.7 | 804 | 5.36 | 805 | 1792 | 460.4 | 22.55 | 13.46 |
| 7 | 48.4 | 608 | 54.4 | 38.9 | 27.2 | 48.4 | 608 | 3.08 | 609 | 1794 | 461.3 | 19.28 | 10.76 |
| 8 | 36.4 | 429 | 54.4 | 38.0 | 27.1 | 36.4 | 430 | 1.64 | 430 | 1795 | 460.9 | 17.70 | 8.44 |
| 9 | 28.9 | 284 | 53.2 | 37.2 | 27.4 | 28.8 | 284 | 0.86 | 285 | 1795 | 461.1 | 16.48 | 6.88 |

| Meas. Point | Motor Powerfact pf | Motor THD V % | Motor THD A % | Coyote Input Volts | Coyote Input Amps | Coyote Coil W | Coyote Coil pf | Vibration Vh IPS | Sound dB | Winding Res. (1-2) | Winding Res. (1-3) | Winding Res. (2-3) | Efficiency % |
|---|---|---|---|---|---|---|---|---|---|---|---|---|---|
| 1 | 0.896 | 3.60 | 5.011 | 459.4 | 0.4036 | 86.19 | 0.465 | 0.0444 | 75.0 | 199.3 | 199.5 | 200.7 | 87.20 |
| 2 | 0.891 | 3.53 | 5.133 | 459.5 | 0.1477 | 27.85 | 0.413 | 0.0409 | 74.4 | 193.2 | 193.3 | 194.4 | 79.07 |
| 3 | 0.877 | 3.73 | 6.110 | 458.4 | 0.1404 | 26.55 | 0.410 | 0.0366 | 73.8 | 188.8 | 188.9 | 190.0 | 69.82 |
| 4 | 0.852 | 3.53 | 7.290 | 459.2 | 0.1349 | 25.23 | 0.406 | 0.0328 | 73.8 | 185.5 | 185.6 | 186.7 | 59.49 |
| 5 | 0.813 | 3.80 | 7.965 | 459.7 | 0.1267 | 23.32 | 0.399 | 0.0322 | 73.8 | 183.4 | 183.5 | 184.6 | 48.93 |
| 6 | 0.748 | 3.53 | 9.048 | 459.3 | 0.1169 | 21.34 | 0.398 | 0.0309 | 73.7 | 181.2 | 181.3 | 182.3 | 39.85 |
| 7 | 0.679 | 3.91 | 10.920 | 460.6 | 0.1120 | 20.12 | 0.391 | 0.0309 | 73.5 | 179.8 | 179.8 | 180.9 | 28.63 |
| 8 | 0.597 | 3.82 | 11.200 | 460.7 | 0.1061 | 18.99 | 0.389 | 0.0309 | 74.1 | 178.8 | 179.0 | 180.1 | 19.43 |
| 9 | 0.522 | 3.92 | 12.310 | 460.6 | 0.1007 | 17.69 | 0.382 | 0.0315 | 74.7 | 178.0 | 178.2 | 179.3 | 12.45 |

**Table A-9**. PAYBACK High-Head Pump Curve Test Results

| Meas. Point | Target Torque Nm | Target Speed Dyno | Temp Bearing C | Temp Case C | Temp Ambient C | Torque Dyno Nm | Speed Dyno rpm | Power Dyno kW | Speed Coyote rpm | Speed Motor rpm | Motor Input Volts | Motor Input Amps | Motor Input kW |
|---|---|---|---|---|---|---|---|---|---|---|---|---|---|
| 1 | 190 | 1705 | 67.1 | 53.4 | 24.5 | 189.5 | 1705 | 33.83 | 1714 | 1773 | 459.2 | 54.36 | 38.75 |
| 2 | 165.1 | 1575 | 60.8 | 47.5 | 24.8 | 165.1 | 1575 | 27.23 | 1581 | 1778 | 459.3 | 47.59 | 33.73 |
| 3 | 132.9 | 1400 | 59.6 | 44.8 | 25.2 | 132.1 | 1400 | 19.37 | 1404 | 1783 | 459.7 | 38.87 | 27.10 |
| 4 | 107.3 | 1225 | 57.6 | 42.3 | 25.2 | 107.3 | 1225 | 13.76 | 1227 | 1787 | 460.4 | 33.00 | 22.46 |
| 5 | 92.6 | 1177 | 55.6 | 40.4 | 25.2 | 92.6 | 1177 | 11.41 | 1178 | 1788 | 460.2 | 29.63 | 19.66 |
| 6 | 80.6 | 1113 | 54.3 | 39.2 | 25.4 | 80.6 | 1113 | 9.39 | 1114 | 1790 | 460.4 | 26.05 | 16.61 |
| 7 | 72.6 | 1079 | 52.8 | 38 | 25.1 | 72.6 | 1079 | 8.20 | 1079 | 1790 | 460.6 | 24.75 | 15.45 |
| 8 | 70.6 | 1070 | 52 | 37.4 | 25.5 | 71.1 | 1070 | 7.97 | 1071 | 1791 | 460.4 | 24.46 | 15.19 |
| 9 | 67.8 | 1031 | 51.6 | 36.9 | 25.3 | 67.3 | 1031 | 7.27 | 1032 | 1792 | 460.2 | 23.63 | 14.43 |
| 10 | 62 | 968 | 51 | 36.7 | 25.7 | 62 | 968 | 6.28 | 968 | 1792 | 460.4 | 22.27 | 13.17 |
| 11 | 59.3 | 918 | 50.8 | 36.5 | 25.7 | 59.3 | 918 | 5.70 | 918 | 1793 | 460.8 | 21.87 | 12.79 |
| 12 | 59.3 | 800 | 51 | 36.6 | 25.9 | 59.3 | 800 | 4.97 | 800 | 1792 | 460.8 | 22.15 | 13.02 |
| 13 | 59.3 | 600 | 52.3 | 36.8 | 26 | 59.3 | 600 | 3.73 | 601 | 1792 | 460.9 | 21.68 | 12.59 |
| 14 | 59.3 | 400 | 52.7 | 36.5 | 26 | 59.3 | 400 | 2.48 | 400 | 1792 | 460.6 | 21.72 | 12.61 |
| 15 | 59.3 | 250 | 53.3 | 36.5 | 26.1 | 59.3 | 250 | 1.55 | 250 | 1792 | 460.8 | 21.68 | 12.58 |

| Meas. Point | Motor Powerfact pf | Motor THD V % | Motor THD A % | Coyote Input Volts | Coyote Input Amps | Coyote Coil W | Coyote Coil pf | Vibration Horiz. Vh(IPS) | Sound dB | Winding Res. (1-2) | Winding Res. (1-3) | Winding Res. (2-3) | Coyote Surface T C | Efficiency % |
|---|---|---|---|---|---|---|---|---|---|---|---|---|---|---|
| 1 | 0.896 | 3.410 | 4.510 | 457.7 | 0.388 | 81.30 | 0.458 | 0.037 | 75.0 | 196.1 | 196.2 | 197.3 | | 87.3 |
| 2 | 0.890 | 3.490 | 5.120 | 457.4 | 0.145 | 27.13 | 0.411 | 0.045 | 74.4 | 190.1 | 190.2 | 191.2 | | 80.7 |
| 3 | 0.875 | 3.580 | 5.780 | 459.1 | 0.136 | 25.40 | 0.408 | 0.035 | 74.0 | 186.7 | 186.8 | 187.9 | | 71.5 |
| 4 | 0.853 | 3.504 | 6.826 | 459.7 | 0.131 | 24.29 | 0.406 | 0.034 | 73.7 | 183.6 | 183.7 | 184.8 | | 61.3 |
| 5 | 0.832 | 3.607 | 7.210 | 460.1 | 0.125 | 22.98 | 0.399 | 0.034 | 73.5 | 181.4 | 181.6 | 182.5 | | 58.1 |
| 6 | 0.799 | 3.711 | 8.175 | 459.4 | 0.118 | 21.56 | 0.397 | 0.034 | 73.7 | 180.4 | 180.5 | 181.5 | | 56.6 |
| 7 | 0.782 | 3.560 | 8.348 | 460.4 | 0.116 | 21.11 | 0.394 | 0.033 | 73.9 | 179.5 | 179.7 | 180.7 | | 53.1 |
| 8 | 0.778 | 3.590 | 7.940 | 458.7 | 0.115 | 20.89 | 0.396 | 0.033 | 73.8 | 178.8 | 179.0 | 180.0 | | 52.4 |
| 9 | 0.766 | 3.700 | 8.450 | 459.9 | 0.114 | 20.67 | 0.393 | 0.033 | 73.9 | 178.5 | 178.6 | 179.7 | | 50.4 |
| 10 | 0.741 | 3.296 | 8.085 | 460.3 | 0.112 | 20.21 | 0.392 | 0.034 | 73.4 | 178.0 | 178.1 | 179.2 | | 47.7 |
| 11 | 0.732 | 3.347 | 8.831 | 460.0 | 0.110 | 19.72 | 0.392 | 0.031 | 73.8 | 177.9 | 178.2 | 179.1 | | 44.6 |
| 12 | 0.737 | 3.595 | 8.548 | 460.4 | 0.116 | 21.12 | 0.394 | 0.038 | 73.5 | 177.9 | 178.1 | 179.2 | | 38.1 |
| 13 | 0.727 | 3.508 | 8.875 | 460.0 | 0.120 | 21.95 | 0.396 | 0.031 | 73.4 | 177.6 | 177.8 | 178.8 | 123.000 | 29.6 |
| 14 | 0.727 | 3.791 | 9.648 | 459.7 | 0.124 | 23.03 | 0.403 | 0.033 | 73.5 | 177.9 | 178.0 | 179.0 | 170.000 | 19.7 |
| 15 | 0.726 | 3.666 | 9.202 | 459.3 | 0.128 | 23.88 | 0.406 | 0.031 | 73.9 | 177.9 | 178.0 | 179.0 | 200.000 | 12.3 |

**Table A-10**. MagnaDrive-Belt Fan Curve Test Results

| Meas. Point | Target Torque Nm | Target Speed rpm | Torque Dyno Nm | Speed Dyno rpm | Power Dyno kW | Speed Motor rpm | Motor Input Volts | Motor Input Amps | Motor Input kW | Motor Powerfact pf | Motor THD V % | Motor THD A % | Temp Bearing C | Temp Case C | Temp Ambient C |
|---|---|---|---|---|---|---|---|---|---|---|---|---|---|---|---|
| 1 | 197.70 | 1800 | 197.7 | 1728 | 35.775 | 1769 | 460.1 | 59.47 | 42.60 | 0.898 | 3.372 | 4.506 | 70.6 | 49.2 | 27.3 |
| 2 | 178.00 | 1705 | 178 | 1705 | 31.781 | 1773 | 460.6 | 53.68 | 38.44 | 0.897 | 3.468 | 4.474 | 67.3 | 47.6 | 27.5 |
| 3 | 143.60 | 1530 | 143.6 | 1530 | 23.008 | 1780 | 461.2 | 44.01 | 31.22 | 0.887 | 3.417 | 4.841 | 59.12 | 43.7 | 27.9 |
| 4 | 123.20 | 1400 | 123.3 | 1400 | 18.077 | 1783 | 460.6 | 39.32 | 27.53 | 0.877 | 3.534 | 5.569 | 54.8 | 40.9 | 28.2 |
| 5 | 99.08 | 1270 | 99.4 | 1270 | 13.220 | 1786 | 460.8 | 33.3 | 22.75 | 0.855 | 3.801 | 7.030 | 52.7 | 39.7 | 28.2 |
| 6 | 81.80 | 1150 | 81.4 | 1150 | 9.803 | 1788 | 460.4 | 28.93 | 19.11 | 0.828 | 3.842 | 8.152 | 50.3 | 38.0 | 28.4 |
| 7 | 65.50 | 1020 | 65.9 | 1020 | 7.039 | 1790 | 460.9 | 25.6 | 16.25 | 0.795 | 3.694 | 8.732 | 48.3 | 36.9 | 28.4 |
| 8 | 50.20 | 890 | 51.9 | 890 | 4.837 | 1792 | 461.4 | 22.63 | 13.55 | 0.749 | 3.829 | 9.307 | 47.13 | 36.0 | 28.2 |
| 9 | 36.66 | 759 | 37 | 759 | 2.941 | 1793 | 461.4 | 19.83 | 10.76 | 0.679 | 4.041 | 12.100 | 45.8 | 35.2 | 28.2 |
| 10 | 25.76 | 629 | 25.6 | 629 | 1.686 | 1795 | 461.5 | 17.75 | 8.482 | 0.597 | 4.122 | 12.050 | 44.6 | 34.7 | 28.4 |
| 11 | 16.23 | 490 | 16.7 | 490 | 0.857 | 1796 | 461.6 | 16.416 | 6.815 | 0.519 | 4.071 | 12.720 | 43.9 | 34.2 | 28.4 |
| 12 | 9.84 | 370 | 9.8 | 370 | 0.380 | 1796 | 461.3 | 15.48 | 5.477 | 0.442 | 3.985 | 12.670 | 43.2 | 34.0 | 28.5 |
| 13 | 7.44 | 310 | 7.7 | 310 | 0.250 | 1797 | 461.6 | 15.236 | 5.072 | 0.416 | 3.928 | 12.450 | 42.8 | 33.7 | 28.4 |
| 14 | 4.73 | 230 | 4.5 | 230 | 0.108 | 1798 | 461.6 | 14.838 | 4.383 | 0.369 | 3.966 | 12.300 | 42.4 | 33.4 | 28.3 |

| Meas. Point | Vibration Vh(IPS) | Sound dB | Winding Res. (1-2) | Winding Res. (1-3) | Winding Res. (2-3) | Efficienc % |
|---|---|---|---|---|---|---|
| 1 | 0.0500 | 80.7 | 206.3 | 205.2 | 206.3 | 83.98 |
| 2 | 0.0618 | 80.4 | 201.4 | 200.3 | 201.4 | 82.68 |
| 3 | 0.0406 | 79.7 | 193.5 | 193.0 | 194.0 | 73.70 |
| 4 | 0.0408 | 82.0 | 192.1 | 191.1 | 192.1 | 65.66 |
| 5 | 0.0394 | 80.3 | 189.0 | 188.1 | 189.1 | 58.11 |
| 6 | 0.0388 | 79.6 | 185.8 | 184.8 | 185.8 | 51.30 |
| 7 | 0.0327 | 80.1 | 184.0 | 183.0 | 184.1 | 43.31 |
| 8 | 0.0449 | 80.2 | 182.1 | 181.3 | 182.2 | 35.70 |
| 9 | 0.0320 | 80.4 | 181.0 | 180.2 | 181.1 | 27.33 |
| 10 | 0.0349 | 80.4 | 179.9 | 179.1 | 180.0 | 19.88 |
| 11 | 0.0282 | 80.2 | 179.1 | 178.3 | 179.3 | 12.57 |
| 12 | 0.0281 | 80.5 | 178.6 | 177.7 | 178.8 | 6.93 |
| 13 | 0.0292 | 80.4 | 178.2 | 177.4 | 178.4 | 4.93 |
| 14 | 0.0276 | 80.2 | 177.9 | 177.1 | 178.1 | 2.47 |

**Table A-11**. MagnaDrive-Belt Low-Head Pump Curve Test Results

| Meas. Point | Target Torque Nm | Target Speed rpm | Torque Dyno Nm | Speed Dyno rpm | Power Dyno kW | Speed Motor rpm | Motor Input Volts | Motor Input Amps | Motor Input kW | Motor PowerFact pf | Motor THD V % | Motor THD A % | Temp Bearing C | Temp Case C | Temp Ambient C |
|---|---|---|---|---|---|---|---|---|---|---|---|---|---|---|---|
| 1 | 201.00 | 1698 | 200.4 | 1698 | 35.634 | 1768 | 460.5 | 59.91 | 42.96 | 0.898 | 4.008 | 5.035 | 71.9 | 50.3 | 27.6 |
| 2 | 167.80 | 1531 | 168 | 1531 | 26.935 | 1775 | 460.3 | 51.25 | 36.61 | 0.895 | 3.944 | 5.418 | 65.1 | 47.2 | 28.4 |
| 3 | 137.60 | 1363 | 139.4 | 1363 | 19.897 | 1780 | 460.3 | 43.38 | 30.66 | 0.886 | 4.069 | 6.494 | 59.2 | 44.1 | 28.6 |
| 4 | 108.00 | 1173 | 108.6 | 1173 | 13.340 | 1785 | 461.1 | 35.53 | 24.55 | 0.864 | 3.977 | 7.729 | 52.3 | 39.8 | 28.5 |
| 5 | 83.60 | 990 | 84.2 | 990 | 8.729 | 1789 | 460.8 | 29.77 | 19.81 | 0.833 | 4.094 | 8.580 | 50.5 | 38.3 | 28.8 |
| 6 | 64.00 | 803 | 64 | 802 | 5.375 | 1790 | 461.9 | 25.12 | 15.81 | 0.787 | 4.097 | 9.776 | 48.7 | 37.0 | 28.5 |
| 7 | 48.40 | 608 | 48.7 | 608 | 3.101 | 1792 | 461.3 | 21.99 | 12.91 | 0.734 | 4.166 | 11.320 | 47.02 | 36.0 | 28.7 |
| 8 | 36.40 | 429 | 36.4 | 429 | 1.635 | 1793 | 461.5 | 19.68 | 10.59 | 0.672 | 4.162 | 12.570 | 45.3 | 35.1 | 28.3 |
| 9 | 28.90 | 284 | 28.3 | 284 | 0.842 | 1794 | 460.6 | 18.147 | 8.91 | 0.615 | 4.216 | 12.930 | 43.9 | 34.6 | 28.5 |

| Meas. Point | Vibration Vh(IPS) | Sound dB | Winding Res. (1-2) | Winding Res. (1-3) | Winding Res. (2-3) | Efficienc % |
|---|---|---|---|---|---|---|
| 1 | 0.0496 | 80.4 | 205.9 | 204.7 | 205.9 | 82.95 |
| 2 | 0.0522 | 79.7 | 202.9 | 201.8 | 202.7 | 73.57 |
| 3 | 0.0570 | 79.9 | 197.1 | 196.0 | 197.0 | 64.90 |
| 4 | 0.0359 | 79.8 | 189.7 | 188.7 | 189.7 | 54.34 |
| 5 | 0.0408 | 80.2 | 186.6 | 185.7 | 186.7 | 44.06 |
| 6 | 0.0416 | 79.8 | 184.0 | 183.1 | 184.1 | 34.00 |
| 7 | 0.0339 | 79.3 | 182.0 | 181.2 | 182.3 | 24.03 |
| 8 | 0.0300 | 79.7 | 180.7 | 179.8 | 180.8 | 15.45 |
| 9 | 0.0290 | 79.8 | 179.8 | 179.0 | 180.0 | 9.44 |

**Table A-12**. MagnaDrive-Belt High-Head Pump Curve Test Results

| Meas. Point | Target Torque Nm | Target Speed rpm | Torque Dyno Nm | Speed Dyno rpm | Power Dyno kW | Speed Motor rpm | Motor Input Volts | Motor Input Amps | Motor Input kW | Motor Powerfact Pf | Motor THD V % | Motor THD A % | Temp Bearing C | Temp Case C | Temp Ambient C |
|---|---|---|---|---|---|---|---|---|---|---|---|---|---|---|---|
| 1 | 190.0 | 1705 | 190.5 | 1705 | 34.013 | 1770 | 460.2 | 57.21 | 40.95 | 0.898 | 4.133 | 5.326 | 66.3 | 47.2 | 26.9 |
| 2 | 165.1 | 1575 | 165.1 | 1575 | 27.231 | 1775 | 461.5 | 50.07 | 35.81 | 0.894 | 3.985 | 5.665 | 63.2 | 46.1 | 27.5 |
| 3 | 132.9 | 1400 | 133.3 | 1400 | 19.543 | 1781 | 461.4 | 41.67 | 29.39 | 0.882 | 4.080 | 6.596 | 55.6 | 42.1 | 27.7 |
| 4 | 107.3 | 1225 | 107.1 | 1225 | 13.739 | 1785 | 461.2 | 35.21 | 24.29 | 0.863 | 3.895 | 7.229 | 51.7 | 39.3 | 25.1 |
| 5 | 92.6 | 1177 | 93.5 | 1177 | 11.524 | 1787 | 461.3 | 31.98 | 21.67 | 0.848 | 3.471 | 7.277 | 50.5 | 38.3 | 28.6 |
| 6 | 80.6 | 1113 | 80.8 | 1112 | 9.409 | 1789 | 460.8 | 29.35 | 19.46 | 0.830 | 3.960 | 8.109 | 47.8 | 37.1 | 28.6 |
| 7 | 72.6 | 1079 | 72.6 | 1079 | 8.203 | 1790 | 461.2 | 27.07 | 17.52 | 0.810 | 3.805 | 8.741 | 47.0 | 36.7 | 28.7 |
| 8 | 70.6 | 1070 | 70.6 | 1070 | 7.911 | 1790 | 461.2 | 26.82 | 17.29 | 0.806 | 4.026 | 9.453 | 46.5 | 36.4 | 29.0 |
| 9 | 67.8 | 1031 | 67.8 | 1031 | 7.320 | 1791 | 461.6 | 26.11 | 16.67 | 0.798 | 3.884 | 9.529 | 46.0 | 36.1 | 29.0 |
| 10 | 62.0 | 968 | 62.0 | 968 | 6.285 | 1791 | 461.0 | 24.82 | 15.50 | 0.782 | 4.086 | 10.180 | 45.7 | 36.0 | 29.2 |
| 11 | 59.3 | 918 | 59.3 | 918 | 5.701 | 1791 | 460.2 | 24.34 | 15.06 | 0.776 | 4.130 | 10.240 | 45.3 | 35.8 | 29.3 |
| 12 | 59.3 | 800 | 59.3 | 800 | 4.968 | 1791 | 461.4 | 24.03 | 14.77 | 0.770 | 4.191 | 10.360 | 45.2 | 35.8 | 29.2 |
| 13 | 59.3 | 600 | 59.9 | 600 | 3.764 | 1791 | 461.0 | 24.43 | 15.15 | 0.776 | 4.102 | 9.955 | 45.3 | 35.9 | 29.6 |
| 14 | 59.3 | 400 | 59.8 | 400 | 2.505 | 1791 | 459.7 | 24.32 | 15.03 | 0.776 | 3.935 | 10.100 | 45.7 | 35.9 | 29.7 |
| 15 | 59.3 | 250 | 59.7 | 250 | 1.563 | 1792 | 461.1 | 24.27 | 15.02 | 0.774 | 3.761 | 10.220 | 45.7 | 35.9 | 29.6 |

| Meas. Point | Vibration Vh(IPS) | Sound dB | Winding Res. | Winding Res. | Winding Res. | Efficiency % |
|---|---|---|---|---|---|---|
| 1 | 0.0528 | 79.8 | 205.7 | 204.2 | 205.2 | 83.06 |
| 2 | 0.0586 | 80.9 | 203.3 | 202.0 | 203.0 | 76.04 |
| 3 | 0.0455 | 79.8 | 194.9 | 193.7 | 194.6 | 66.49 |
| 4 | 0.0358 | 80.0 | 189.6 | 188.6 | 189.6 | 56.56 |
| 5 | 0.0323 | 79.9 | 187.4 | 186.4 | 187.4 | 53.18 |
| 6 | 0.0308 | 79.5 | 184.7 | 183.8 | 184.8 | 48.35 |
| 7 | 0.0276 | 79.9 | 183.7 | 182.8 | 183.8 | 46.84 |
| 8 | 0.0292 | 79.9 | 183.1 | 182.2 | 183.3 | 45.76 |
| 9 | 0.0308 | 80.0 | 182.4 | 181.7 | 182.7 | 43.91 |
| 10 | 0.0449 | 79.8 | 182.3 | 181.4 | 182.4 | 40.54 |
| 11 | 0.0425 | 79.9 | 182.0 | 181.2 | 182.2 | 37.86 |
| 12 | 0.0389 | 80.0 | 181.9 | 182.2 | 181.1 | 33.64 |
| 13 | 0.0385 | 79.9 | 181.6 | 180.8 | 181.9 | 24.85 |
| 14 | 0.0397 | 79.7 | 182.0 | 181.2 | 182.3 | 16.66 |
| 15 | 0.0307 | 79.5 | 182.1 | 181.3 | 182.3 | 10.41 |

**Table A-13**. MagnaDrive-Direct Fan Curve Test Results

| Meas. Point | Target Torque Nm | Target Speed rpm | Torque Dyno Nm | Speed Dyno rpm | Power Dyno kW | Motor Speed rpm | Overall slip rpm | Motor Input Volts | Motor Input Amps | Motor Powerfact pf | Motor Input kW | System Efficiency % | Mechan. Load % |
|---|---|---|---|---|---|---|---|---|---|---|---|---|---|
| 1 | 197.70 | 1800 | 197.3 | 1728 | 35.704 | 1769 | 41 | 459.7 | 58.32 | 0.899 | 41.76 | 85.50 | 95.76 |
| 2 | 178.00 | 1705 | 177.8 | 1705 | 31.747 | 1773 | 68 | 460.6 | 52.59 | 0.897 | 37.64 | 84.34 | 85.15 |
| 3 | 143.60 | 1530 | 143.6 | 1530 | 23.008 | 1780 | 250 | 460.7 | 43.33 | 0.886 | 30.65 | 75.07 | 61.71 |
| 4 | 123.20 | 1400 | 123.8 | 1400 | 18.151 | 1783 | 383 | 461.3 | 38.29 | 0.874 | 26.75 | 67.85 | 48.68 |
| 5 | 99.08 | 1270 | 99.4 | 1270 | 13.220 | 1787 | 517 | 461.7 | 32.49 | 0.850 | 22.10 | 59.82 | 35.46 |
| 6 | 81.80 | 1150 | 81.8 | 1150 | 9.851 | 1789 | 639 | 460.3 | 28.46 | 0.823 | 18.70 | 52.69 | 26.42 |
| 7 | 65.50 | 1020 | 65.7 | 1020 | 7.018 | 1791 | 771 | 460.3 | 24.86 | 0.785 | 15.57 | 45.08 | 18.82 |
| 8 | 50.20 | 890 | 50.3 | 890 | 4.688 | 1793 | 903 | 460.7 | 21.65 | 0.729 | 12.60 | 37.20 | 12.57 |
| 9 | 36.66 | 759 | 36.6 | 759 | 2.909 | 1794 | 1035 | 459.9 | 19.47 | 0.670 | 10.40 | 27.98 | 7.80 |
| 10 | 25.76 | 629 | 25.5 | 629 | 1.680 | 1796 | 1167 | 460.6 | 17.23 | 0.573 | 7.88 | 21.32 | 4.51 |
| 11 | 16.23 | 490 | 16.2 | 490 | 0.831 | 1797 | 1307 | 460.6 | 15.96 | 0.485 | 6.17 | 13.46 | 2.23 |
| 12 | 9.84 | 370 | 10.6 | 370 | 0.411 | 1797 | 1427 | 460.4 | 15.20 | 0.415 | 5.03 | 8.16 | 1.10 |
| 13 | 7.44 | 310 | 9.0 | 310 | 0.292 | 1797 | 1487 | 460.8 | 15.05 | 0.396 | 4.76 | 6.13 | 0.78 |
| 14 | 4.73 | 230 | 8.9 | 230 | 0.214 | 1797 | 1567 | 460.2 | 15.03 | 0.396 | 4.75 | 4.51 | 0.57 |

| Meas. Point | Winding Res. (1-2) | Winding Res. (1-3) | Winding Res. (2-3) | Winding Res. Aver | Temp Bearing C | Temp Case C | Temp Ambient C | Temp Winding C | Sound dB | Vibration Vh(IPS) | Motor THD V % | Motor THD A % |
|---|---|---|---|---|---|---|---|---|---|---|---|---|
| 1 | 208.6 | 207.1 | 208.0 | 207.9 | 70.6 | 54.1 | 25.9 | 89.4 | 80.2 | 0.122 | 3.47 | 4.20 |
| 2 | 206.1 | 204.5 | 205.6 | 205.4 | 66.8 | 51.5 | 26.1 | 85.5 | 80.4 | 0.129 | 3.66 | 4.96 |
| 3 | 197.7 | 196.4 | 197.5 | 197.2 | 57.0 | 46.4 | 27.5 | 72.7 | 79.9 | 0.120 | 3.48 | 5.24 |
| 4 | 193.1 | 191.9 | 193.0 | 192.7 | 54.2 | 44.0 | 28.0 | 65.7 | 80.8 | 0.112 | 3.87 | 6.31 |
| 5 | 189.7 | 188.5 | 189.5 | 189.2 | 53.2 | 42.1 | 27.9 | 60.3 | 80.3 | 0.049 | 3.94 | 7.77 |
| 6 | 187.0 | 186.1 | 187.1 | 186.7 | 50.1 | 40.5 | 28.5 | 56.4 | 79.7 | 0.042 | 3.83 | 8.99 |
| 7 | 184.8 | 184.0 | 184.9 | 184.6 | 48.3 | 38.4 | 28.6 | 53.0 | 81.2 | 0.046 | 3.82 | 9.70 |
| 8 | 183.1 | 182.2 | 183.2 | 182.8 | 46.3 | 38.1 | 28.6 | 50.3 | 80.9 | 0.087 | 3.67 | 10.03 |
| 9 | 182.1 | 181.2 | 182.4 | 181.9 | 45.5 | 37.3 | 28.5 | 48.9 | 80.9 | 0.028 | 3.90 | 12.03 |
| 10 | 181.0 | 180.2 | 181.2 | 180.8 | 44.3 | 36.6 | 28.3 | 47.2 | 80.5 | 0.020 | 3.93 | 13.06 |
| 11 | 180.0 | 179.1 | 180.1 | 179.7 | 43.1 | 35.8 | 28.4 | 45.5 | 80.6 | 0.026 | 3.99 | 13.91 |
| 12 | 179.5 | 178.6 | 179.6 | 179.2 | 42.2 | 34.9 | 27.9 | 44.7 | 80.0 | 0.027 | 4.04 | 13.68 |
| 13 | 178.9 | 178.1 | 179.1 | 178.7 | 41.7 | 34.5 | 27.7 | 43.9 | 80.6 | 0.024 | 3.86 | 13.29 |
| 14 | 178.7 | 178.0 | 178.9 | 178.5 | 41.3 | 34.4 | 27.7 | 43.6 | 80.3 | 0.024 | 3.84 | 12.48 |

**Table A-14**. MagnaDrive-Direct Low-Head Pump Curve Test Results

| Meas. Point | Target Torque Nm | Target Speed rpm | Torque Dyno Nm | Speed Dyno rpm | Power Dyno kW | Motor Speed rpm | Overall slip rpm | Motor Input Volts | Motor Input Amps | Motor Powerfact pf | Motor Input kW | System Efficiency % | Motor Efficiency % | Coupling Efficiency % |
|---|---|---|---|---|---|---|---|---|---|---|---|---|---|---|
| 1 | 201.0 | 1698 | 201.1 | 1698 | 35.76 | 1769 | 71 | 460.2 | 59.4 | 0.899 | 42.56 | 84.02 | 92.42 | 90.91 |
| 2 | 167.8 | 1531 | 168.1 | 1531 | 26.95 | 1774 | 243 | 460.0 | 49.7 | 0.895 | 35.43 | 76.07 | 93.36 | 81.48 |
| 3 | 137.6 | 1363 | 138.0 | 1363 | 19.70 | 1780 | 417 | 460.0 | 41.9 | 0.883 | 29.50 | 66.77 | 94.18 | 70.90 |
| 4 | 108.0 | 1173 | 107.9 | 1173 | 13.25 | 1785 | 612 | 460.5 | 34.4 | 0.860 | 23.64 | 56.07 | 94.07 | 59.60 |
| 5 | 83.6 | 990 | 83.6 | 990 | 8.67 | 1789 | 799 | 460.8 | 28.7 | 0.826 | 18.90 | 45.85 | 93.83 | 48.86 |
| 6 | 64.0 | 803 | 64.0 | 803 | 5.38 | 1791 | 988 | 460.5 | 24.4 | 0.780 | 15.19 | 35.44 | 92.84 | 38.17 |
| 7 | 48.4 | 608 | 48.3 | 608 | 3.08 | 1793 | 1185 | 460.8 | 21.1 | 0.717 | 12.08 | 25.45 | 92.08 | 27.64 |
| 8 | 36.4 | 429 | 36.3 | 429 | 1.63 | 1794 | 1365 | 460.9 | 18.9 | 0.650 | 9.79 | 16.65 | 91.57 | 18.19 |
| 9 | 28.9 | 284 | 29.1 | 284 | 0.87 | 1795 | 1511 | 460.6 | 17.7 | 0.598 | 8.45 | 10.24 | 91.29 | 11.22 |

| Meas. Point | Winding Res. (1-2) | Winding Res. (1-3) | Winding Res. (2-3) | Winding Res. Aver | Temp Bearing C | Temp Case C | Temp Ambient C | Temp Winding C | Sound dB | Vibration Vh(IPS) | Motor THD V % | Motor THD A % |
|---|---|---|---|---|---|---|---|---|---|---|---|---|
| 1 | 212.1 | 210.7 | 211.7 | 211.5 | 73.7 | 55.7 | 25.9 | 95.0 | 81.6 | 0.126 | 3.51 | 4.15 |
| 2 | 204.3 | 203.1 | 204.2 | 203.9 | 65.9 | 51.1 | 26.0 | 83.1 | 81.5 | 0.118 | 3.57 | 5.17 |
| 3 | 195.8 | 194.8 | 195.8 | 195.5 | 56.7 | 45.7 | 27.2 | 70.0 | 80.2 | 0.098 | 3.82 | 6.01 |
| 4 | 190.0 | 189.0 | 190.1 | 189.7 | 52.8 | 42.1 | 27.6 | 61.0 | 80.4 | 0.043 | 3.74 | 7.10 |
| 5 | 186.8 | 186.0 | 186.8 | 186.5 | 49.9 | 40.0 | 27.9 | 56.1 | 80.2 | 0.048 | 3.72 | 8.48 |
| 6 | 184.6 | 183.8 | 184.8 | 184.4 | 48.0 | 38.7 | 27.8 | 52.8 | 81.2 | 0.033 | 3.64 | 8.75 |
| 7 | 182.6 | 181.8 | 182.9 | 182.4 | 45.8 | 37.4 | 28.4 | 49.7 | 81.2 | 0.024 | 3.75 | 10.46 |
| 8 | 181.4 | 180.4 | 181.5 | 181.1 | 44.9 | 36.5 | 28.0 | 47.6 | 81.0 | 0.024 | 3.44 | 10.81 |
| 9 | 180.9 | 180.1 | 181.1 | 180.7 | 44.5 | 36.3 | 28.2 | 47.0 | 81.2 | 0.023 | 3.90 | 12.18 |

**Table A-15**. MagnaDrive-Direct High-Head Pump Curve Test Results

| Meas. Point | Target Torque Nm | Target Speed rpm | Torque Dyno Nm | Speed Dyno rpm | Power Dyno kW | Motor Speed rpm | Overall Slip rpm | Motor Input Volts | Motor Input Amps | Motor Powerfact pf | Motor Input kW | System Efficiency % | Motor Efficiency % | Coupling Efficiency % |
|---|---|---|---|---|---|---|---|---|---|---|---|---|---|---|
| 1 | 190.0 | 1705 | 190.0 | 1705 | 33.93 | 1771 | 66 | 461.3 | 55.7 | 0.898 | 39.97 | 84.88 | 92.71 | 91.55 |
| 2 | 165.1 | 1575 | 165.1 | 1575 | 27.23 | 1776 | 201 | 461.2 | 49.6 | 0.894 | 35.43 | 76.86 | 93.37 | 82.32 |
| 3 | 132.9 | 1400 | 133.7 | 1400 | 19.60 | 1782 | 382 | 461.3 | 40.7 | 0.880 | 28.62 | 68.49 | 94.17 | 72.73 |
| 4 | 107.3 | 1225 | 109.3 | 1225 | 14.02 | 1785 | 560 | 461.6 | 34.7 | 0.861 | 23.90 | 58.67 | 94.08 | 62.36 |
| 5 | 92.6 | 1177 | 91.9 | 1177 | 11.33 | 1788 | 611 | 461.1 | 30.6 | 0.840 | 20.55 | 55.12 | 94.02 | 58.63 |
| 6 | 80.6 | 1113 | 79.0 | 1113 | 9.21 | 1789 | 676 | 460.5 | 27.7 | 0.818 | 18.06 | 50.98 | 93.60 | 54.47 |
| 7 | 70.6 | 1070 | 70.9 | 1070 | 7.94 | 1790 | 720 | 461.1 | 26.0 | 0.798 | 16.55 | 48.01 | 93.20 | 51.52 |
| 8 | 67.8 | 1031 | 67.8 | 1031 | 7.32 | 1791 | 760 | 459.6 | 25.4 | 0.791 | 15.98 | 45.82 | 93.06 | 49.23 |
| 9 | 62.0 | 968 | 61.9 | 968 | 6.27 | 1792 | 824 | 460.5 | 23.9 | 0.770 | 14.65 | 42.83 | 92.71 | 46.19 |
| 10 | 59.3 | 918 | 60.1 | 918 | 5.78 | 1792 | 874 | 460.9 | 23.6 | 0.765 | 14.40 | 40.13 | 92.65 | 43.32 |
| 11 | 59.3 | 800 | 59.2 | 800 | 4.96 | 1792 | 992 | 460.8 | 23.3 | 0.761 | 14.17 | 34.99 | 92.59 | 37.79 |
| 12 | 59.3 | 600 | 59.2 | 600 | 3.72 | 1792 | 1192 | 460.2 | 23.3 | 0.760 | 14.12 | 26.35 | 92.58 | 28.46 |
| 13 | 59.3 | 400 | 60.3 | 400 | 2.53 | 1792 | 1392 | 461.0 | 23.6 | 0.756 | 14.43 | 17.50 | 92.66 | 18.89 |
| 14 | 59.3 | 250 | 59.4 | 250 | 1.56 | 1792 | 1542 | 460.7 | 23.2 | 0.758 | 14.05 | 11.07 | 92.57 | 11.96 |

| Meas. Point | Winding Res. (1-2) | Winding Res. (1-3) | Winding Res. (2-3) | Winding Res. Aver | Temp Bearing C | Temp Case C | Temp Ambient C | Temp Winding C | Sound dB | Vibration Vh(IPS) | Motor THD V % | Motor THD A % |
|---|---|---|---|---|---|---|---|---|---|---|---|---|
| 1 | 204.6 | 203.3 | 204.5 | 0.0682 | 70.0 | 53.8 | 26.1 | -128.3 | 80.7 | 0.1265 | 3.44 | 4.74 |
| 2 | 202.5 | 201.2 | 202.3 | 0.0674 | 62.8 | 49.7 | 26.6 | -129.4 | 80.5 | 0.1137 | 3.55 | 4.89 |
| 3 | 193.0 | 192.0 | 193.0 | 0.0643 | 53.9 | 44.1 | 27.4 | -134.3 | 80.7 | 0.1260 | 3.26 | 5.02 |
| 4 | 189.6 | 188.6 | 189.6 | 0.0632 | 52.0 | 41.8 | 27.8 | -136.0 | 81.0 | 0.0363 | 3.37 | 5.98 |
| 5 | 187.4 | 186.4 | 187.4 | 0.0625 | 49.9 | 40.1 | 27.9 | -137.2 | 80.4 | 0.0390 | 3.61 | 7.04 |
| 6 | 186.0 | 185.0 | 186.0 | 0.0620 | 47.9 | 39.1 | 27.3 | -137.9 | 80.9 | 0.0416 | 3.44 | 7.15 |
| 7 | 184.6 | 183.8 | 184.6 | 0.0615 | 46.5 | 38.2 | 27.5 | -138.6 | 81.1 | 0.0401 | 3.55 | 7.90 |
| 8 | 183.8 | 182.9 | 183.9 | 0.0613 | 45.5 | 37.7 | 27.6 | -139.0 | 81.1 | 0.0404 | 3.68 | 8.96 |
| 9 | 183.0 | 182.1 | 183.2 | 0.0611 | 44.9 | 37.1 | 27.7 | -139.4 | 80.9 | 0.0442 | 3.62 | 8.75 |
| 10 | 182.4 | 181.5 | 182.5 | 0.0608 | 44.3 | 36.5 | 27.2 | -139.7 | 81.1 | 0.0586 | 3.56 | 8.87 |
| 11 | 182.0 | 181.0 | 182.0 | 0.0607 | 43.8 | 36.2 | 27.3 | -140.0 | 80.8 | 0.0823 | 3.59 | 8.75 |
| 12 | 181.8 | 180.9 | 181.9 | 0.0606 | 44.2 | 36.1 | 27.1 | -140.0 | 80.7 | 0.0310 | 3.42 | 8.26 |
| 13 | 181.6 | 180.8 | 181.8 | 0.0606 | 44.0 | 35.9 | 27.8 | -140.1 | 80.9 | 0.0222 | 3.61 | 8.85 |
| 14 | 182.3 | 181.4 | 182.4 | 0.0608 | 44.5 | 36.1 | 28.0 | -139.8 | 81.1 | 0.0236 | 3.76 | 8.82 |

# Appendix B

# Energy Use Simulations for ASDs

# Appendix B

# Energy Use Simulations for ASDs

To create fan curves for QuikFan 4.0 software, the test data for the Coyote, MagnaDrive-Belt, MagnaDrive-Direct and VFD were used in the following fashion:

First, it is clear that in most cases, the Coyote or MagnaDrive can only be installed on an existing motor if that motor is already somewhat oversized for the load. It was assumed for the purpose of this comparison that the existing motor and fan system is approximately 4% oversized. We assumed that the first step in improving system efficiency would be to adjust the system to correct for this sizing, and because this could be done for all systems, no relative economic value was attributed to this adjustment for any of the three systems. After adjustment, the peak flow rate for the purpose of the QuikFan comparison was achieved at 1706 rpm for a nominal 1775-rpm service motor and fan system.

The next step was to determine the relative power consumption of the VFD at various fractions of the full load speed compared to the full load consumption of the motor. At a speed of 1706 rpm, the efficiency of VFD alone (power input of the VFD divided by power output of the VFD) was interpolated to be 97.3%. The power requirement of the motor was estimated at the 1706-rpm point based on a cubic relationship between power and speed. Input of the VFD at 1706 rpm was estimated based on the above two calculations. Next, input power to the VFD relative to the peak motor input power required was tabulated for each test point below 1706 rpm. Finally, a cubic spline curve fit was used to develop curves of VFD input power relative to the 1706-rpm peak motor input power. Points were then extracted from this cubic spline curve at intervals of 5% speed to create performance curves for use with QuikFan. The relative fan speed was used as a surrogate for relative flow rate. The resulting performance curves are shown in Table B-1. The fan load profile is also shown in Figure B-1.

The power requirements for the Coyote and MagnaDrive relative to the 1706-rpm motor input power requirements from the VSD test were also tabulated for each motor speed point below 1706 rpm. As with the VSD data, a cubic spline curve fit was used to develop curves of motor power input with the MC-ASDs relative to peak motor input power requirements from the Inverter test for 1706 rpm full load speed. These data points for the resulting performance curves are provided in Table B-1.

All performance curves were entered into the QuikFan software. The analysis was based on using the "mixed perimeter/core zone" load profile in QuikFan, but adjusted by moving all binned hours upwards to the next highest 5% load bin (approximately reflecting the 4% downsizing of the system). In addition, the "regular" operation schedule was assumed for the analysis. This schedule operates the fan system for 3,476 hours a year, 12 hours per day, Monday through Friday, with 4 hours on Saturday and Sunday, and five holidays a year.

**Table B-1**. QuikFan Performance Curves and Duty Cycle

| Flow Rate Fraction, % | Performance Curves | | | | Duty Cycle (Percent of total flowhour in bin) % |
|---|---|---|---|---|---|
| | Baseline Performance, % | VFD, % | Coyote, % | MagnaDrive, % | |
| 0 to 5 | 75.0 | 0.59 | 3.69 | 9.98 | 0.0 |
| 5 to 10 | 75.0 | 1.41 | 4.97 | 11.31 | 0.1 |
| 10 to 15 | 75.0 | 1.82 | 7.72 | 13.58 | 0.6 |
| 15 to 20 | 75.0 | 2.40 | 9.89 | 15.49 | 2.1 |
| 20 to 25 | 75.0 | 3.34 | 11.95 | 17.75 | 4.1 |
| 25 to 30 | 75.0 | 4.57 | 14.82 | 20.75 | 5.2 |
| 30 to 35 | 75.0 | 6.19 | 17.98 | 23.65 | 6.8 |
| 35 to 40 | 75.0 | 8.38 | 22.26 | 27.36 | 7.8 |
| 40 to 45 | 75.0 | 11.12 | 27.08 | 32.10 | 8.9 |
| 45 to 50 | 75.0 | 14.43 | 31.32 | 37.42 | 9.4 |
| 50 to 55 | 75.0 | 18.91 | 35.73 | 42.76 | 9.6 |
| 55 to 60 | 75.0 | 24.27 | 41.09 | 47.92 | 9.6 |
| 60 to 65 | 80.0 | 29.87 | 47.64 | 53.21 | 9.1 |
| 65 to 70 | 87.0 | 36.46 | 54.67 | 59.57 | 7.6 |
| 70 to 75 | 90.0 | 44.87 | 61.92 | 67.75 | 6.4 |
| 75 to 80 | 93.0 | 54.98 | 69.61 | 77.22 | 5.2 |
| 80 to 85 | 93.0 | 64.91 | 77.51 | 85.04 | 4.3 |
| 85 to 90 | 94.0 | 75.15 | 86.08 | 92.12 | 2.6 |
| 90 to 95 | 96.0 | 87.80 | 95.96 | 101.67 | 0.6 |
| 95 to 100 | 100.0 | 102.8 | 106.61 | 112.90 | 0.0 |

**Figure B-1**. Fan Load Profile Bins (3,476 hours/year)

# Appendix C

# Federal Life-Cycle Costing Procedures and the BLCC Software

# Appendix C

## Federal Life-Cycle Costing Procedures and the BLCC Software

Federal agencies are required to evaluate energy-related investments on the basis of minimum life-cycle costs (10 CFR Part 436). A life-cycle cost evaluation computes the total long-term costs of a number of potential actions, and selects the action that minimizes the long-term costs. When considering retrofits, sticking with the existing equipment is one potential action, often called the baseline condition. The life-cycle cost (LCC) of a potential investment is the present value of all of the costs associated with the investment over time.

The first step in calculating the LCC is identification of the costs. Installed Cost includes cost of materials purchased and the labor required to install them (for example, the price of an energy-efficient lighting fixture, plus cost of labor to install it). Energy Cost includes annual expenditures on energy to operate equipment. (For example, a lighting fixture that draws 100 watts and operates 2,000 hours annually requires 200,000 watt-hours (200 kWh) annually. At an electricity price of $0.10 per kWh, this fixture has an annual energy cost of $20.) Non-fuel Operations and Maintenance includes annual expenditures on parts and activities required to operate equipment (for example, replacing burned out light bulbs). Replacement Costs include expenditures to replace equipment upon failure (for example, replacing an oil furnace when it is no longer usable).

Because LCC includes the cost of money, periodic and aperiodic maintenance (O&M) and equipment replacement costs, energy escalation rates, and salvage value, it is usually expressed as a present value, which is evaluated by

$$LCC = PV(IC) + PV(EC) + PV(OM) + PV(REP)$$

where,

PV(x) denotes "present value of cost stream x"
IC is the installed cost
EC is the annual energy cost
OM is the annual non-energy O&M cost
REP is the future replacement cost

Net present value (NPV) is the difference between the LCCs of two investment alternatives, e.g., the LCC of an energy-saving or energy-cost-reducing alternative and the LCC of the existing, or baseline, equipment. If the alternative's LCC is less than the baseline's LCC, the alternative is said to have a positive NPV, i.e., it is cost-effective. NPV is thus given by

$$NPV = PV(EC0) - PV(EC1)) + PV(OM0) - PV(OM1)) + PV(REP0) - PV(REP1)) - PV(IC)$$

or

$$NPV = PV(ECS) + PV(OMS) + PV(REPS) - PV(IC)$$

where,

subscript 0 denotes the existing or baseline condition
subscript 1 denotes the energy cost saving measure
IC is the installation cost of the alternative (note that the IC of the baseline is assumed zero)
ECS is the annual energy cost savings
OMS is the annual non-energy O&M savings
REPS is the future replacement savings

Levelized energy cost (LEC) is the breakeven energy price (blended) at which a conservation, efficiency, renewable, or fuel-switching measure becomes cost-effective (NPV >= 0). Thus, a project's LEC is given by

$$PV(LEC*EUS) = PV(OMS) + PV(REPS) - PV(IC)$$

where,

EUS is the annual energy use savings (energy units/yr).
Savings-to-investment ratio (SIR) is the total (PV) savings of a measure divided by its installation cost:

$$SIR = (PV(ECS) + PV(OMS) + PV(REPS))/PV(IC).$$

Some of the tedious effort of life-cycle cost calculations can be avoided by using the Building Life-Cycle Cost software, BLCC, developed by NIST. For copies of BLCC, call the FEMP Help Desk at (800) 363-3732.

# Distribution

**No. of Copies**

**OFFSITE**

Dewey Boggs
Coyote Electronics, Inc.
4701 Old Denton Road
Fort Worth, Texas 76117

William Carroll
Lawrence Berkeley National Laboratory
1 Cyclotron Road, B-90 MS: 1023
Berkeley, CA 94720

Jane Cicala
MagnaDrive Corporation
4200 38th Street, NW
Washington, D.C. 20016

Lisa Hollingsworth
U.S. Department of Energy
Atlanta Regional Office
730 Peachtree Street, NE, Suite 76
Atlanta, GA 30308

Johnny Douglass
WSU Cooperative Extension Energy Program
925 Plum Street SE, Bldg. #4
P.O. Box 43165
Olympia, WA 98504-3165

Sharon Gill
U.S. Department of Energy
Chicago Regional Office
1 South Wacker Drive, Suite 2380
Chicago, IL 60606

**No. of Copies**

Randy Jones
U.S. Department of Energy
Denver Regional Office
1617 Cole Boulevard
Golden, CO 80401

Julia Kelley
Oak Ridge National Laboratory
1 Bethel Valley Road
P.O. Box 2008, Building 3147
Oak Ridge, TN 37831-6070

Paul King
U.S. Department of Energy
Boston Regional Office
JFK Federal Building, Room 675
Boston, MA 02203

MagnaDrive Corporation
ATTN: Ken Black
Bruce Densmore
1600 Fairview Avenue East, Suite 300
Seattle, Washington 98102

C. Marchione
U.S. Department of Energy
Philadelphia Regional Office
1880 JFK Boulevard, Suite 501
Philadelphia, PA 19102

Michael Mulkerin
1475 Green Bluffs Court
Rancho Cordova, CA 95670

**No. of**
**Copies**

Oregon State University
ATTN: Alan Wallace
Andre Ramme
Annette Vonjouanne
Motor Systems Resource Facility
Department of Electrical and
Computer Engineering
Corvallis, OR 97331-3211

Stephanie Tanner
National Renewable Energy Laboratory
901 D Street, SW, Suite 930
Washington, D.C. 20024

Arun Jhaveri
U.S. Department of Energy
Seattle Regional Office
800 Fifth Avenue, Suite 3950
Seattle, WA 98104

U.S. Department of Energy-FEMP
ATTN: T. Collins (4)
S. Schell
B. Shearer
1000 Independence Avenue, SW
Washington D.C. 20585

**No. of**
**Copies**

**ONSITE**

**DOE Richland Operations Office**

D. Biancosino K8-50

30 **Pacific Northwest National Laboratory**

W. E. Chvála (15) K5-08
S. A. Parker (5) K5-08
D. Payson K7-90
B. Sandusky K5-08
D. W. Winiarski (4) K5-08
FEMP Project File (2)
Hanford Technical Library (2) P8-55