Evolution or Revolution

Microturbine Development at Elliott Energy Systems

David Dewis

President & COO

Elliott Energy Systems, Inc.

Ddewis@elliottmicroturbines.com

Tel: +1 772 463 3320

ELLIOTT MICROTURBINES
EBARA GROUP

Overview

- Commercial Sales Started in 1998
- Early issues
  - Equipment Flexibility
  - Installation
  - Market Projections
- Mid Range Issues
  - Reliability
  - Installation
- Maturity
  - Economics
- Revolution

Early Issues

- Equipment Flexibility
  - Stand Alone Parallel
  - Dual Mode
  - Hot Water Heat Exchanger

The Customer always wants more than commercially available for an emerging technology

Early Issues

- Installations
  - BOP Complexities
  - Limited Expertise
  - Viability of projects

Installers did not understand the differences between Microturbine and Gen Sets. They do now!

ELLIOTT MICROTURBINES
EBARA GROUP

Early Issues

- Market Projections
  - Companies quoted annual sales in excess of 10,000 units per year
  - Many Published Reports Over Estimated Timing for Market Penetration
  - High Inventory Levels of Product – All Mfg's.
  - Some suppliers got burned.

Irrational Exuberance – Who is Greenspan!

Reliability

- Reliability Growth
  - Implementation time
    - Recuperator – EES Annular design but used second source.
    - Power Electronics – 4th design iteration and 3rd manufacturer
- Installation Issues
  - Site Design – Product Knowledge
  - Permitting – Local Authorities Lack of Information
  - Project Management
  - Simple Tasks tend to be underestimated

Program Management – Always blame what you cannot control

Recuperator

- Solar Recuperator
  - Good Effectiveness
  - Not Committed to Market
- EESI Recuperator
  - Excellent results
  - Heavy Investment Required
- TRAD Recuperator
  - Very Reliable
  - High volume facility
  - Characteristics match

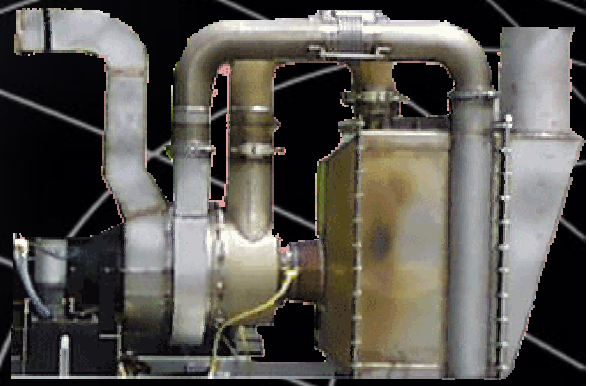

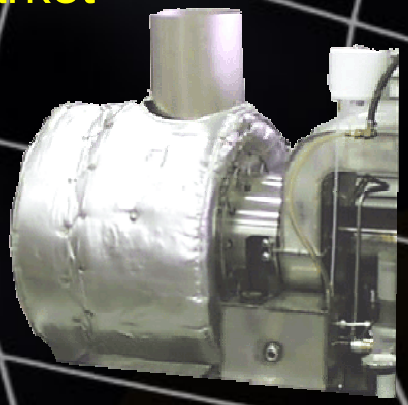

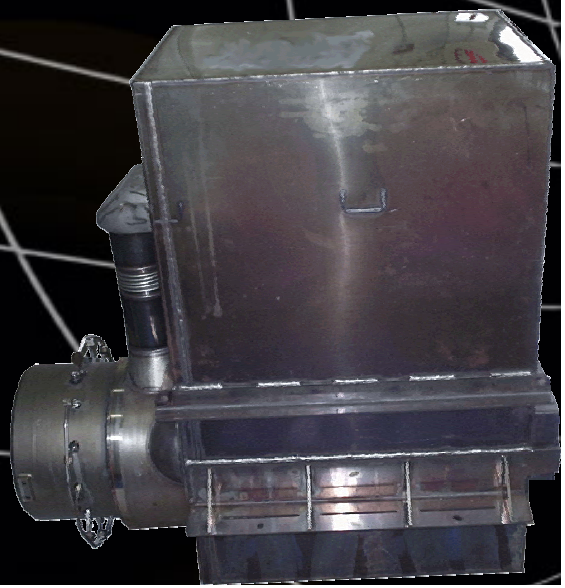

ELLIOTT MICROTURBINES
EBARA GROUP

Power Electronics

- **EESI Design 45 kW**
  - **Proof of concept**
  - **208 Volt**
  - **Current Undersized**
- **120 AMP Design - 80 kW**
  - **Current Undersized for 400 VAC/ 50 Hz**
  - **Component Quality**
- **195 AMP Design – 80/100 kW**
  - **Full Digital PE**
  - **Proprietary Logic – Changes difficult & costly to implement**
- **200 AMP Design – 100 kW**
  - **Ebara Densan Design & Manufactured**
  - **Increased functionality – lessons learned**
  - **Touch Screen Controls**

Maturity - Then

- Installation Too Complicated, Caused Errors
  - Connections
    - Exhaust to HEX
    - Water In/ Out
    - Fuel to Gas Compressor
    - Gas Compressor
      - Fuel to Engine
      - Control
      - Power
    - Power Output
  - Separate Systems
    - HEX
    - Remote Monitoring
    - Building Management Communications
    - Gas Safety

Integrators worked hard to satisfy.

Maturity - Now

- TA100 integrated System
  - Recuperator
  - Gas Compressor
  - Heat Exchanger
- Connections
  - Fuel In
  - Water In/ Out
  - Power Out
  - Communications
- Certification
  - CE GAD compliant

Keep it simple – No Assembly Required And Batteries are Included

ELLIOTT MICROTURBINES
EBARA GROUP

Maturity

large clusters are becoming popular.

ELLIOTT MICROTURBINES
EBARA GROUP

Maturity

- Equipment Configurations – Cogen or Monogen
- Parallel – Stand Alone and Grid
- Dual Mode – Switching on the fly
- Interfaces with Building Management Systems

Give the Customer what he wants.

Maturity

- Market Knowledge is Improving
  - Marketing Played Role of Educator
    - What is a Microturbine?
    - What is Cogeneration?
    - How can I manage my energy costs with a Microturbine.
  - Feedback from the market led to product improvements.
  - Education has paid dividends – now seeing some “pull” from the Market.

Now they know what they want!

Future

- Market for large clusters is increasing.
  - Arrays of 20-30 units on the horizon.
- Maturity of Product is Attracting More Engineers to think of microturbines to solve energy supply issues.
- We will move from the “Niche” period when Utilities accept DE.

Burner Project

- CEC PIER Program
  - CMC Engineering, COEN, Lawrence Berkeley National Lab, Elliott Energy Systems
  - Integration of a 100kW engine with a COEN FYR-Compak™ Industrial Burner using a Delta-NOx burner™.

LBNL Silo Combustor Integration

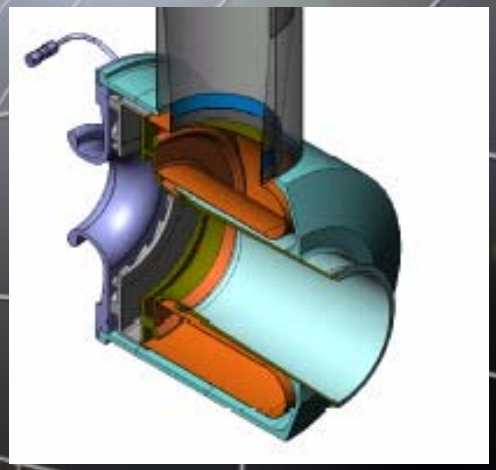

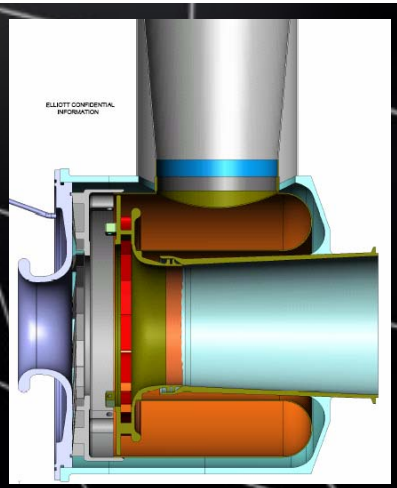

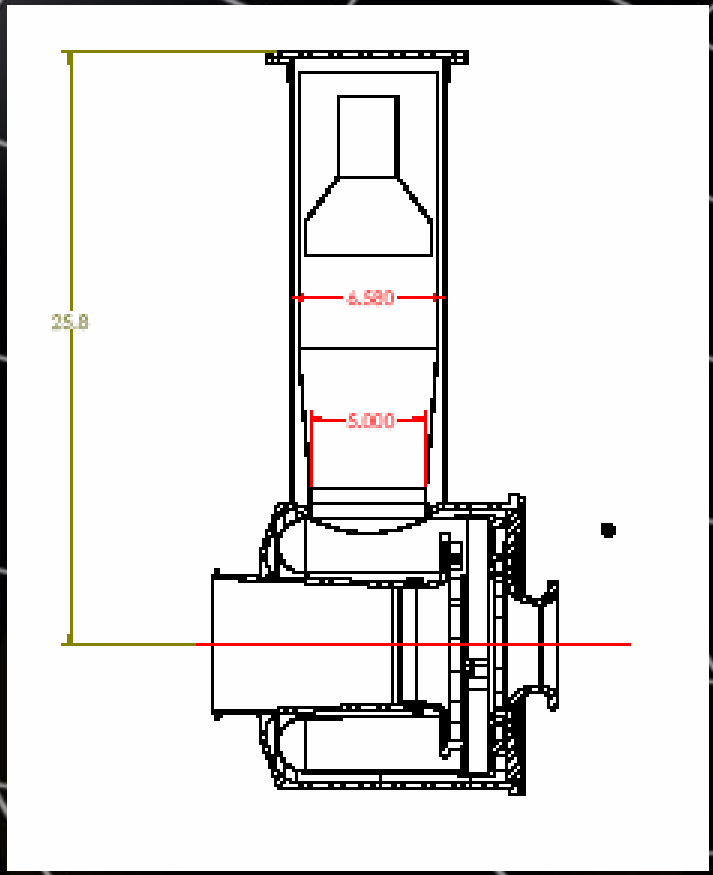

ELLIOTT MICROTURBINES
EBARA GROUP

LPM Combustor

ELLIOTT MICROTURBINES
EBARA GROUP

Integrated Solution

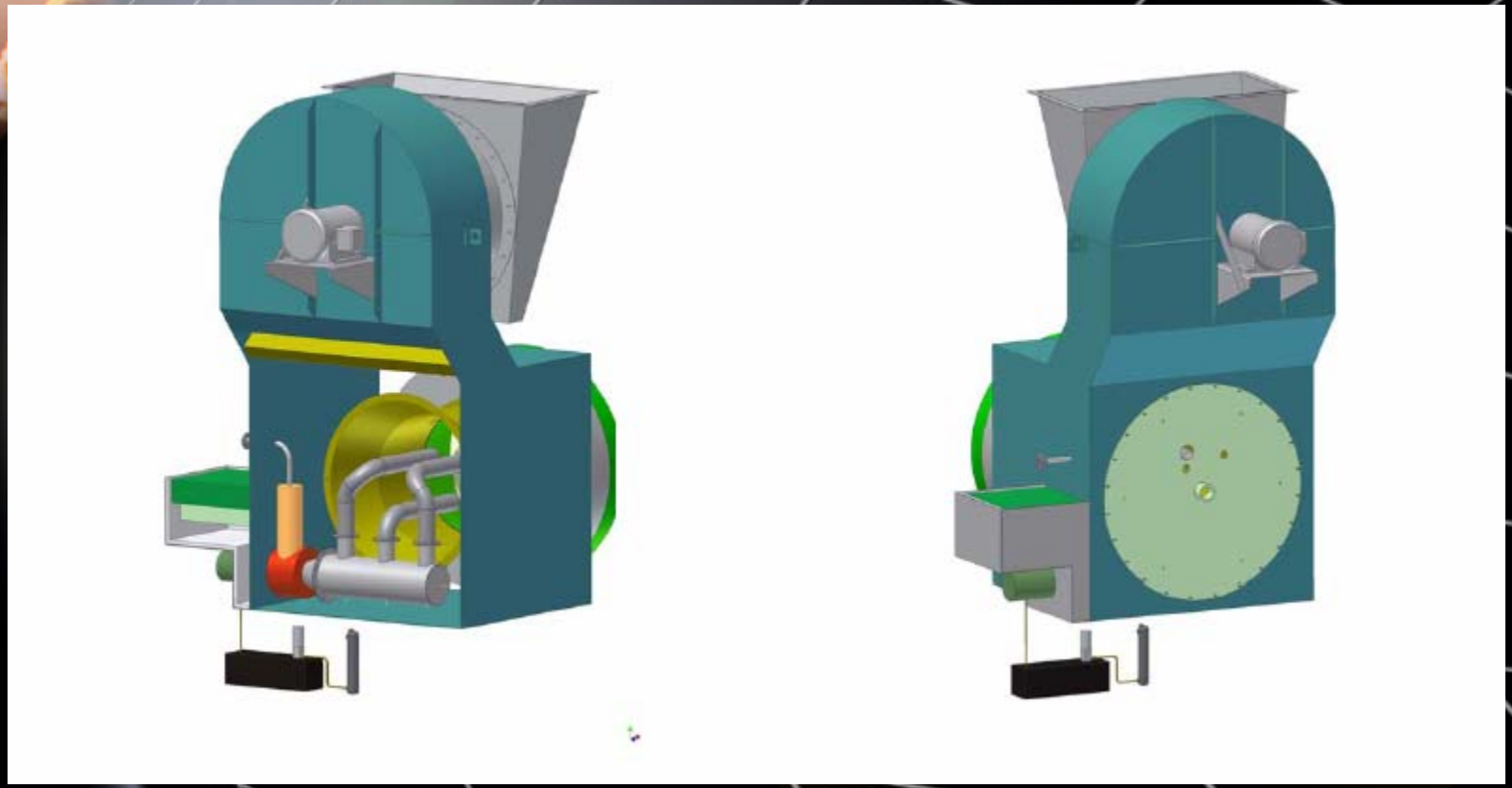

Program Status

- Status
  - Initial testing of an Elliott engine integrated with a COEN Industrial burner – complete
  - Integration with Windbox – in process.
  - Low NOx LBNL Combustor hardware and atmospheric testing – complete.
  - Engine Hardware fabrication – in process.
  - Engine Test with LBNL Combustor – June
  - Final Integrated system test - TBD