Teledyne Turbine Engines

Advanced Materials in Advanced Industrial Gas Turbines

For

U.S. Department of Energy (DOE)

Cooperative Agreement No: DE-FC02-00CH11050

March 12-14, 2002

Teledyne Continental Motors-Turbine Engines

Gas Turbine Engine Manufacturer for Military Markets

TACTICAL MISSILES

JET TRAINERS

TARGETS

RECONNIASSANCE

DECOY

Teledyne Turbine Engines

Power Generation: Microturbine

Commercial Market Initiative

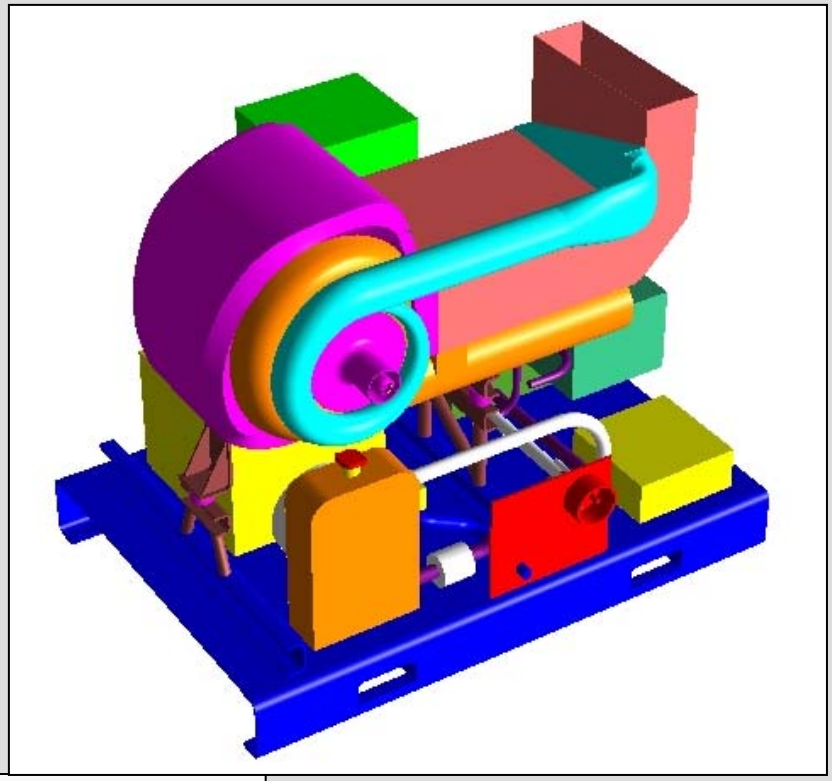

Model 105 - 50 kW

- **Commercial Markets: U.S. and International**
- **Power Ranges From 50 kW to 1+ mW**
- **Combined Heat and Power Options**

Teledyne Turbine Engines

Microturbine Configuration

Model 1096 Config. for DOE Adv. Mat. Project

96kW Output (High Temperature Cycle)

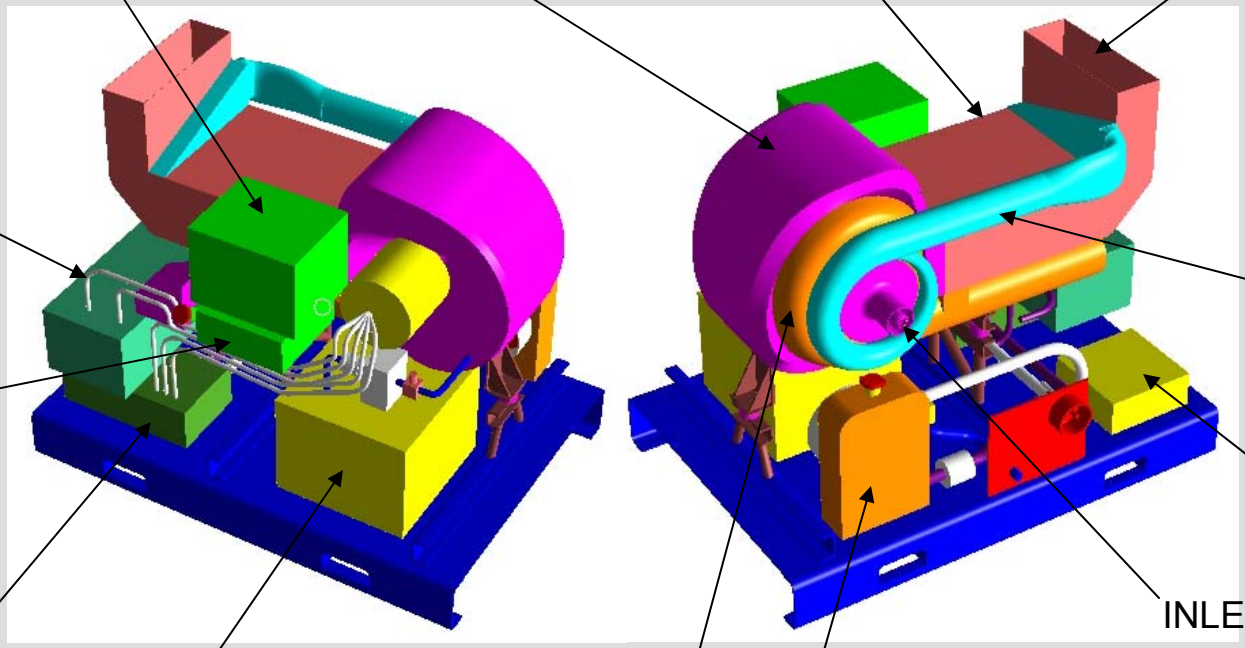

Derivative of Model 105 Configuration

Teledyne Turbine Engines

Model 1096 Engine Core Cross-Section

DOE Adv. Mat. Project - Three Components Identified

Radial Turbomachinery Components

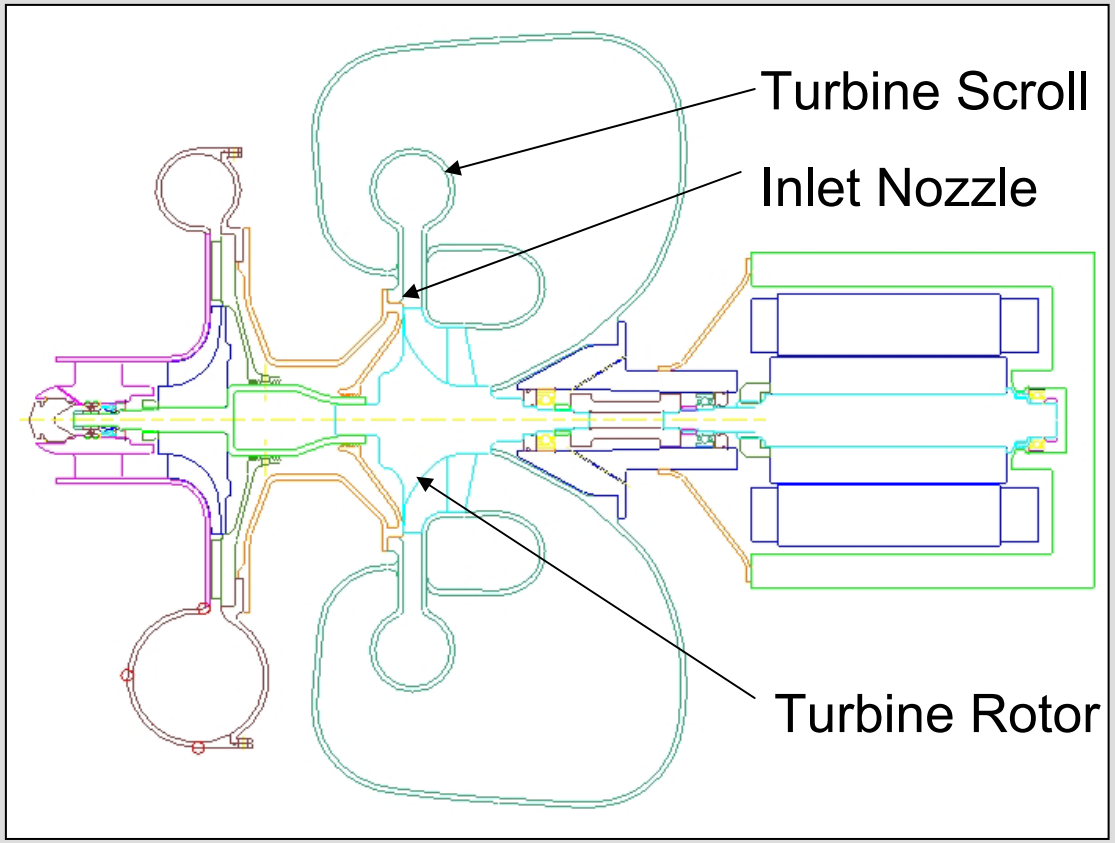

Direct Coupled Starter-Alternator

Performance Summary

- SL, Std. Day
- Power = 96 kW
- 40% Thermal Eff.
- Pr = 4:1
- 2,400 °F TRIT
- 66,000 rpm
- Recup. Eff. = 90%
- Natural Gas Fuel

(LHV=21,100 Btu/lbm

Teledyne Turbine Engines

DOE Advanced Materials Project - Task 1 Type

Program Statement of Work - Objective

Demonstrate the fabrication process capabilities, component dimensional quality, and limited material property characteristics for two advanced, low cost potential material systems for high temperature cycle gas turbine component applications:

(1) Pressure powder consolidation for an Inconel 713 turbine rotor.

(2) Pressure sintering consolidation of titanium silicon carbide powder (Ti_3SiC_2) for complex turbine static structures, including a turbine scroll and an integral vane inlet turbine nozzle.

(3) Prepare a Subtask “A” Report for Market Study and Barriers to Entry for a 50 kW Microturbine

DOE Advanced Materials Project

Initial Proof of Feasibility Step Toward Full Component Development

- **450 °F Cycle Temperature Increase from Baseline TCM-TE Model 105 Design**
- **20% Thermal Efficiency Improvement**
- **50% Reduction in Unit Manufacturing Cost**

DOE Advanced Materials Project

Development Team In-Place

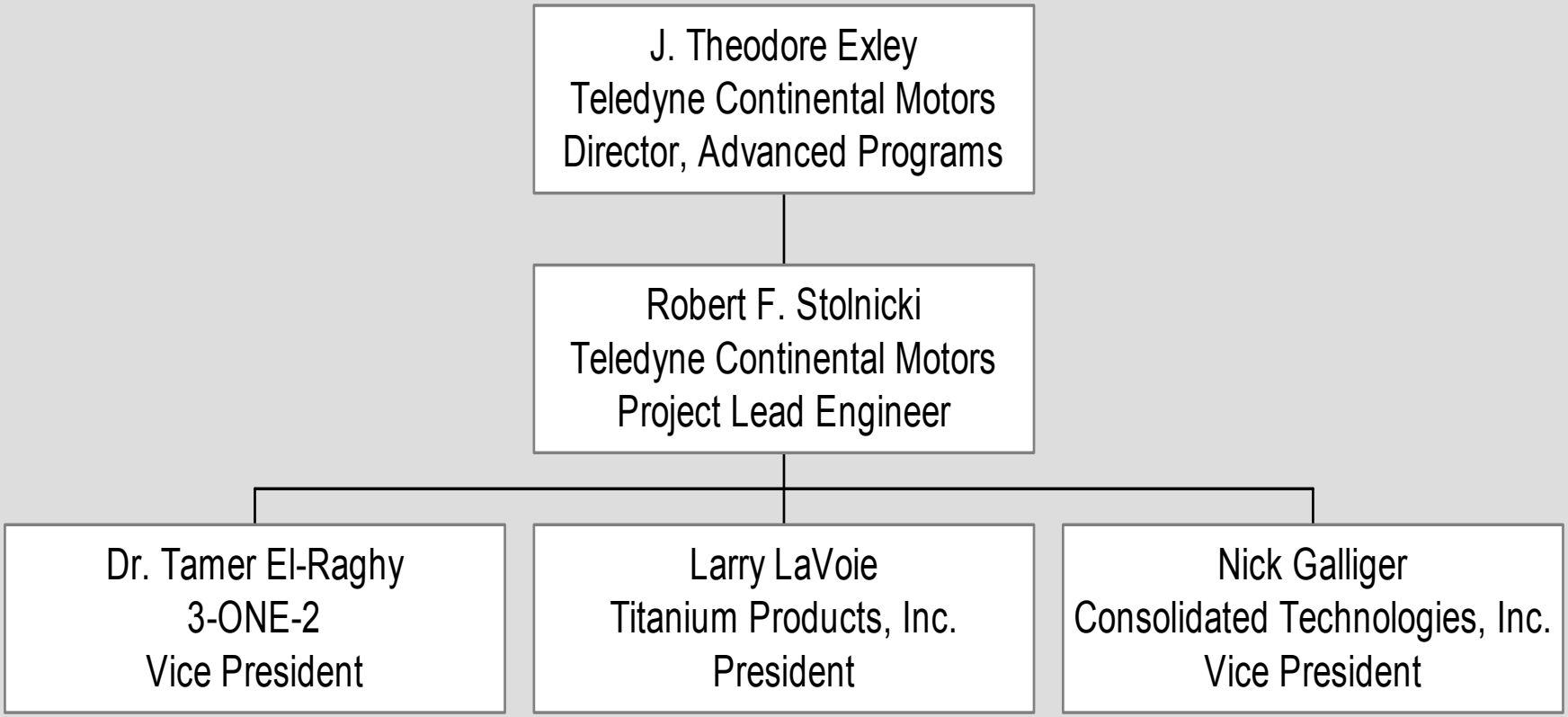

Teledyne Turbine Engines

DOE Advanced Materials Project

Program Statement of Work - Approach

- DOE contract established for a cost share with team of TCM-TE and sub-contractors.
- Titanium Products to conduct the pressure consolidation of the powder IN713 turbine rotor.
- Consolidated Technologies to support Titanium Products in the use of their patented flexible rubber pattern tooling process.
- 3-ONE-2 to utilize the services of Titanium Products and Consolidated Technologies to produce partially sintered parts for the turbine inlet nozzle and turbine inlet scroll.
- Completion of the pressure sintering will be conducted at Drexel University under the auspices of 3-ONE-2.
- Summarize market study results and assessment of barriers to market entry results for the Model 105 50 kW microturbine.

Teledyne Turbine Engines

Flexible Pattern Process for Power Processing

Extend Process Capability to INCO 713LC for High Temperature Metallic Components

Process Description

- STL Master Tool Shape
- Flexible Pattern
- Power Consolidation
- HIP for Final Consolidation to Near Net Shape

Demonstrated Pre-consolidated and Final Consolidated Rotor for Titanium Material

Benefits

- Low Production Cost
  - Minimize Tooling Costs
  - Minimize Production Process Steps

Teledyne Turbine Engines

Titanium Silicon Carbide Material System

Ti_3SiC_2: Extend Capability To Full Size Prime Engine Components

3-ONE-2 LLC Processed Material Offers Unique Properties:

- High Temperature Strength for Static Engine Components
- Better Metallic CTE Match than Ceramics
- Fracture Toughness
- Damage Tolerance
- Thermal Shock Resistant
- Oxidation Resistance
- Low Creep
- Forming: Powder Sintering
- Easily Machined

Beginning Component Status

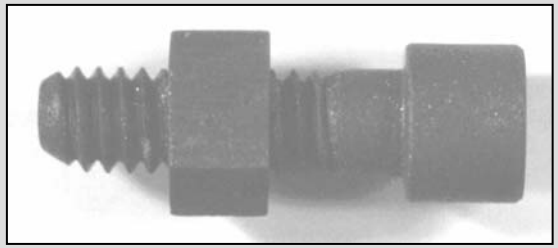

Physical Properties

Thermodynamically stable up to 2200 °C.

Density of 4.5 gm/cm^3.

Young's Modulus of 325 GPa.

Electrical Conductivity (R.T.) of 4.5x10^6 ohm^{-1}m^{-1}

Thermal Conductivity (R.T.) of 43 W/(m.k)

Crack Growth Resistance of ~9 MPa m$^{-0.5}$

Fracture Toughness (R.T.) of 8 - 11 MPa m$^{-0.5}$

Teledyne Turbine Engines

Titanium Silicon Carbide

Ti_3SiC_2 Stress-Strain Curves

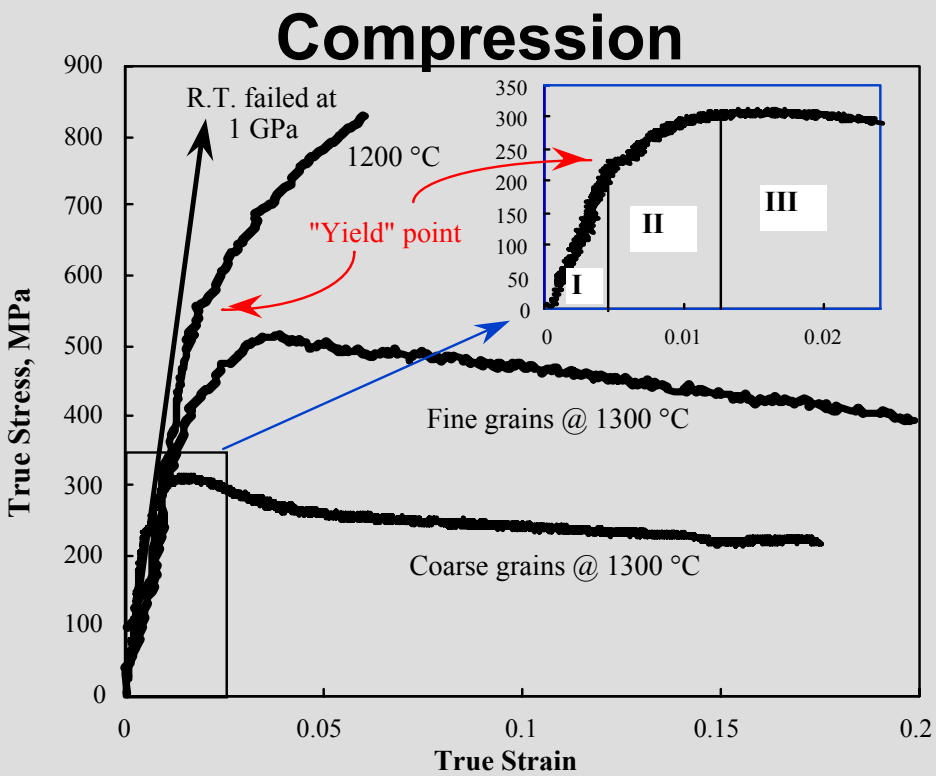

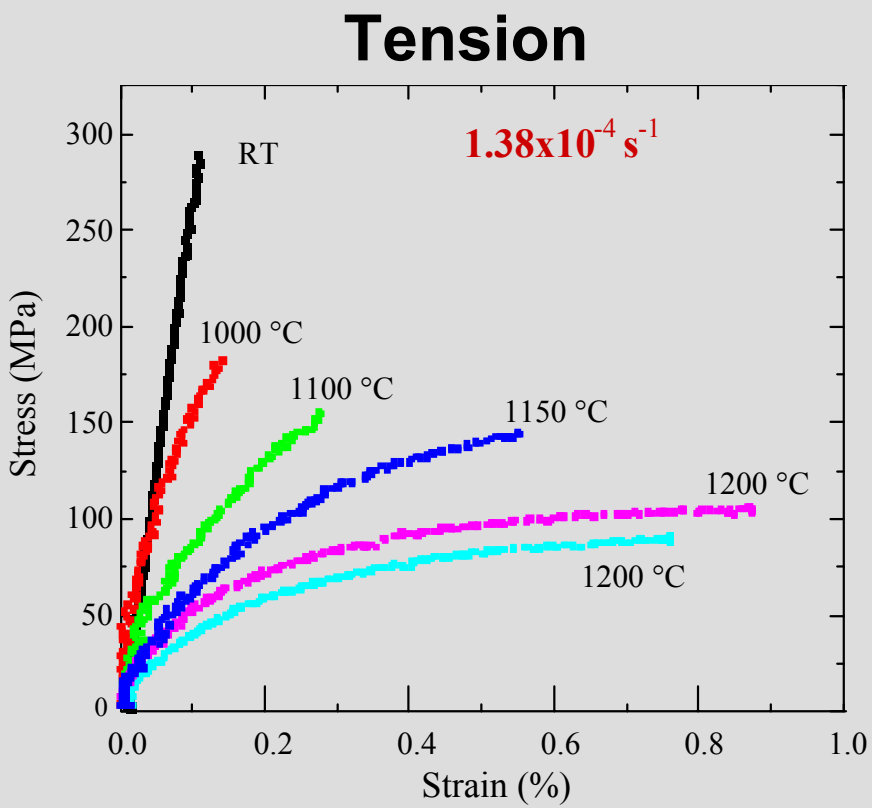

M. Radovic, M. W. Barsoum, T. El-Raghy, and S. Wiederhorn, Submitted for pub.

Teledyne Turbine Engines

DOE Advanced Materials Project

Summary of 2001 Results and Accomplishments

- Preliminary design of the turbine rotor, inlet nozzle and scroll completed-
  - Thermodynamic cycle, aero flowpaths, structural analysis, mechanical design, and release of drawings.
- Turbine scroll final slip cast tooling fabricated and with process development trials underway using the Ti_3SiC_2 material.
- Turbine inlet nozzle segment tooling fabricated for injection molding, debind, and sintering trials using the Ti_3SiC_2 material. TIN segments successfully fabricated.
- Sub-scale rotor molds produced using flexible rubber patterns with HIP trials underway using INCO 713 powder.
- Subtask “A” report for Market Study and Barriers to Entry for a 50 kW Microturbine completed.

Teledyne Turbine Engines

DOE Advanced Materials Project

Preliminary Design of Components

- **Turbine Rotor (M105 Scale Variant)**
  - Increased Blade Number
    - No Splitter Blades
  - Thinner Blade Thickness
  - Increased Turning
  - Relative Smaller Tip Clearance
- **Turbine Nozzle**
  - Reduced Passage Height
  - Relatively Thinner Trailing Edges
- **Scroll**
  - Split Halves - Fastened Assembly
  - Minimize Inner Radius
  - Uniform Area Reduction and Shape Change (Minimize Pressure Losses)

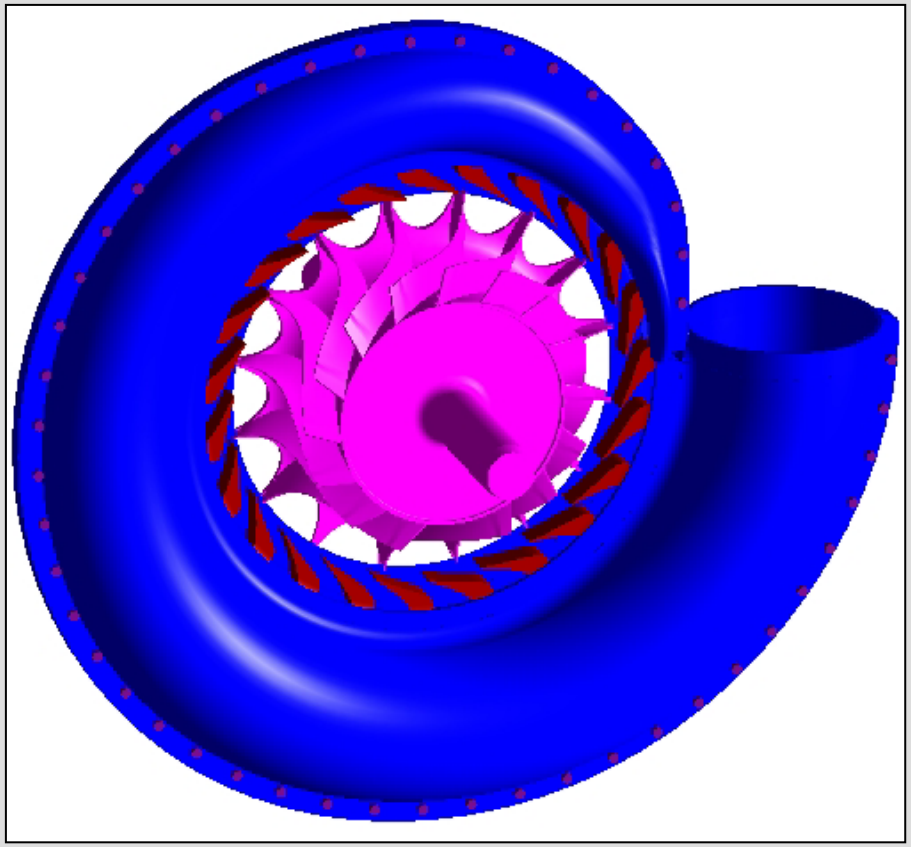

Teledyne Turbine Engines

DOE Advanced Materials Project

Fabricated Turbine Inlet Nozzle Segments

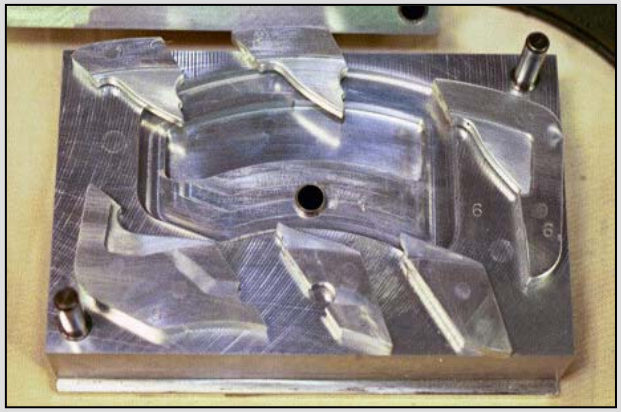

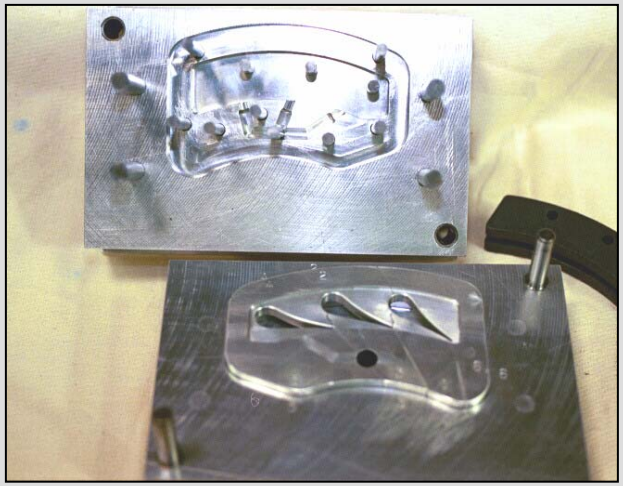

Ti_3SiC_2 Injection Mold
Process Trials

Next Step - Integral Ring Trials

Teledyne Turbine Engines

DOE Advanced Materials Project

Turbine Scroll Tooling and Process Trial

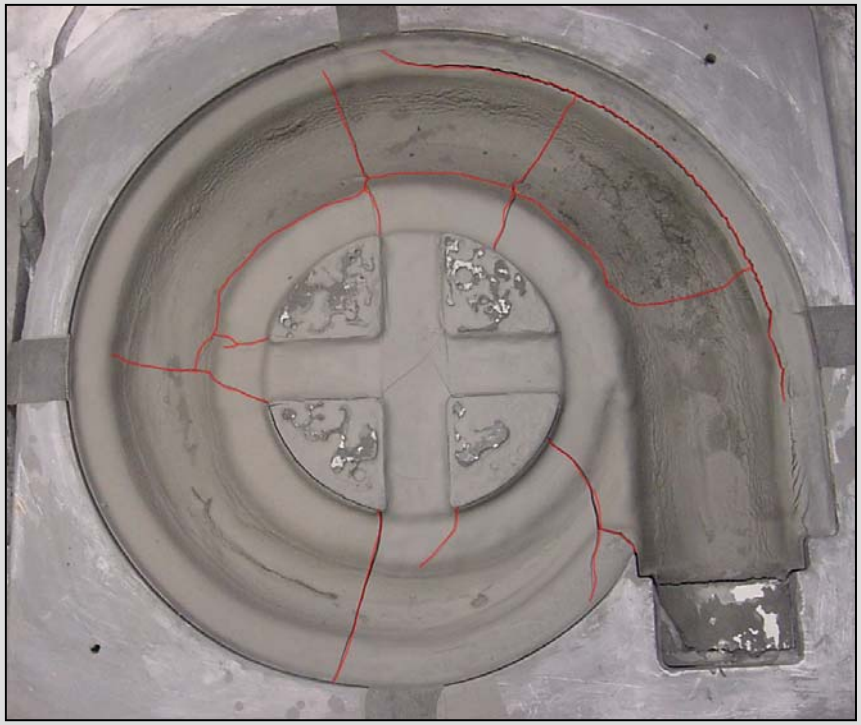

Ti_3SiC_2 Slip-Cast Process Trials

Processing Trial Concerns - Mold Release, Binder Content, and Component Support

DOE Advanced Materials Project

Turbine Rotor Glass Mold and HIP Trial

INCO713LC Powdered Nickel Process Trials

HIP Concerns - Multiple HIP Configurations Attempted with Partial Consolidation and Distortions to Date. Continuing HIP trials.

Teledyne Turbine Engines

DOE Advanced Materials Project

Subtask "A" Market Study and Barriers to Entry for a 50kW Microturbine

- **Market is sensitive to price and operating cost**
  - Current prices too high to drive market
  - Potential large market with competitive pricing
    - Manufacturing volume required
  - Market will take time to develop
- **Barriers To Entry**
  - Technical, economic, and socio-political
  - Market demand could overcome obstacles
    - Standards evolving

Teledyne Turbine Engines

DOE Advanced Materials Project

Summary of 2002 Plans and Expectations

Process Development: Efforts in 2002 will focus on completing the manufacturing process development tasks to successfully HIP (Hot Isostatically Press) the Inco 713LC turbine rotor, fully densify the Ti_3SiC_2 turbine inlet nozzle, and sinter the Ti_3SiC_2 turbine scroll. Project adjustments may be considered upon trial results.

Component Fabrication: Complete fabrication of tooling and produce a minimum of four each deliverable parts.

Component Verification: Conduct dimensional inspections and material mechanical property testing. Conduct scroll and inlet nozzle thermal cyclic rig test. Conduct rotor spin test to 120% of design speed.

Project Completion: End of 2002.

Teledyne Turbine Engines

CONTINENTAL™

Teledyne Turbine Engines