July Quarterly Review

Madison, Wisconsin
July 9, 2002

by

Brett L Schumacher

RealEnergy, Inc.

P.I. – Steven Greenberg, *RealEnergy, Inc.*

Technical Monitor – Holly P. Thomas, *NREL*

Subcontract Objectives

- Define the state of the art of optimal control, energy management and communication technologies for distributed power systems
  - *Identifying design and operational issues*
  - *Working within cost and physical constraints*
  - *Implement and "publish" results*
- Identify regulatory and market barriers

Subcontract Description

Base Year

- Defining Information and Communication Requirements
- Developing Optimal Dispatch Scenarios
- Field Testing and Installation
- Identifying Market Barriers to Entry
- Establish a public website, detailing actual operations

Option Year

- Design and implement system improvements through performance evaluations
- Further determining interconnection barriers
- Establish Data Monitoring and Analysis Processes
- Upgrade website with more information

Progress Since Jan. 2002

Organization

- Hired Overdomain, Inc. to help with writing and organizing of NREL reports
- Installed another six CHP systems, including C&C (Total Installed: 13)
  - *Validated basic system architecture – foundation for growth and improvements*
- Operations team grew by three employees

Interconnection and Market Issues

- Persuaded utilities to file 3rd Party Interconnection Agreements
  - *Allows for agreements between Electricity Producer and Utility, not just Host Site*
  - *SCE and PG&E approved by the CPUC; SDGE still pending.*
- Rule 21
  - *Ongoing role in the drafting of "Supplemental Review" Procedures*
- Interconnecting with PG&E network system in San Francisco
  - *Avoided a costly, "Interconnection Study" by addressing their issues regarding the setting of network protectors, percentage of line segments / circuits, and power degradation.*
- Secured RealEnergy's first Self-Gen. Incentive check

Progress Since Jan. 2002

Technical

- Continued lack of generic and “open architecture” system monitoring components forced further design and development by RealEnergy staff.
  - *Two new system configurations developed*
- Patent now pending on RealEnergy’s designs for Command & Control systems
- Installation of the first fully sub netted system (all data fed over the internet)
  - *Regular phones used as a “back-up”*
- Successful integration between RealEnergy metering system and the cogen’s factory installed monitoring and control system
- Cost-Constraints again playing an issue in improved system design
  - *Communication requirements rise and fall as budgets fluctuate*

RealEnergy : an early innovator

The Company

- Based in Woodland Hills,CA
- Leading innovator in providing Distributed Generation systems
- Provides customized solutions for onsite energy requirements

Products and Services

- Onsite energy generation with customized solutions using :
  - Micro-turbines
  - IC Engines
  - Fuel Cells
  - Solar
- Design, Installation and Maintenance services

Applications

- Onsite base-load and peak-load
- Combined Heat and Power (CHP)
- Standby/Backup power integrated with Primary Power
- Specialist applications (e.g. power quality improvements)

Customer Segments

- Currently serving the CA and NY institutional real estate market commercial, Hospitality, and light industrial
- May consider business with utilities

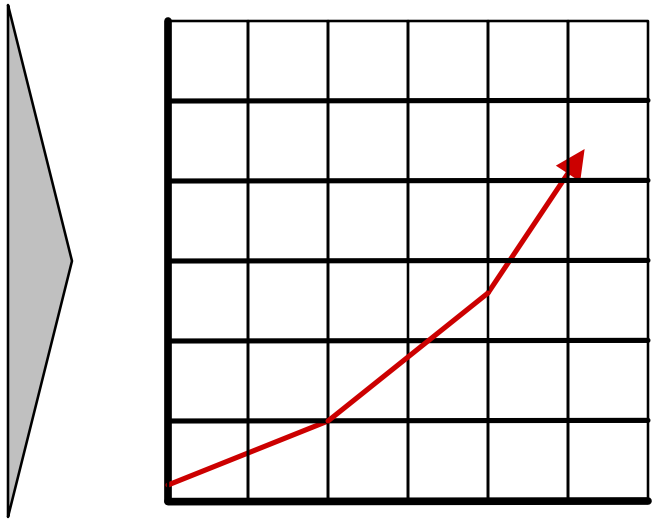

High Growth Trajectory

There is a paradigm shift in the energy industry – from centralized to distributed generation

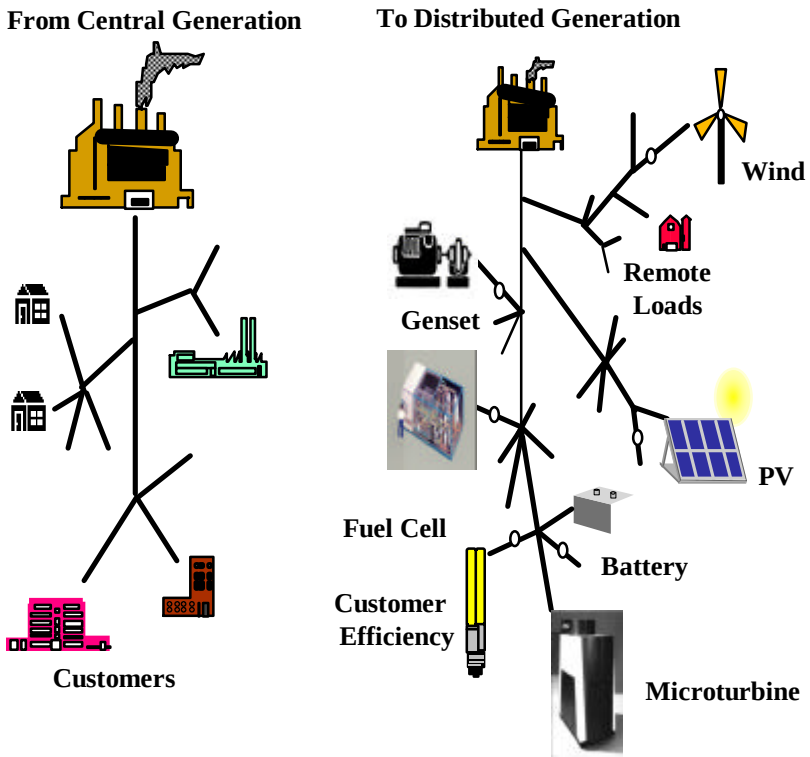

urrently there are more than 60,000 MW of of distributed power installed

hipment of microturbines growing at 400% annually

se of DG growing in the range of 7-17% for its different applications

Current Architecture

Current Architecture

Communication*	
Authentication$ / Authorization	
Data Logging* / Monitoring Layer	
Billing (Vista – Customized C++)*	**Notification$ (Email / Pager)**
Accounting (Timberline)*	
Reporting	
Data Mining/Pattern Matching	
Database (MSSQL)*	

* Currently Implemented
$ Partially implemented

Standard Metering Configuration – 2 Gen Site

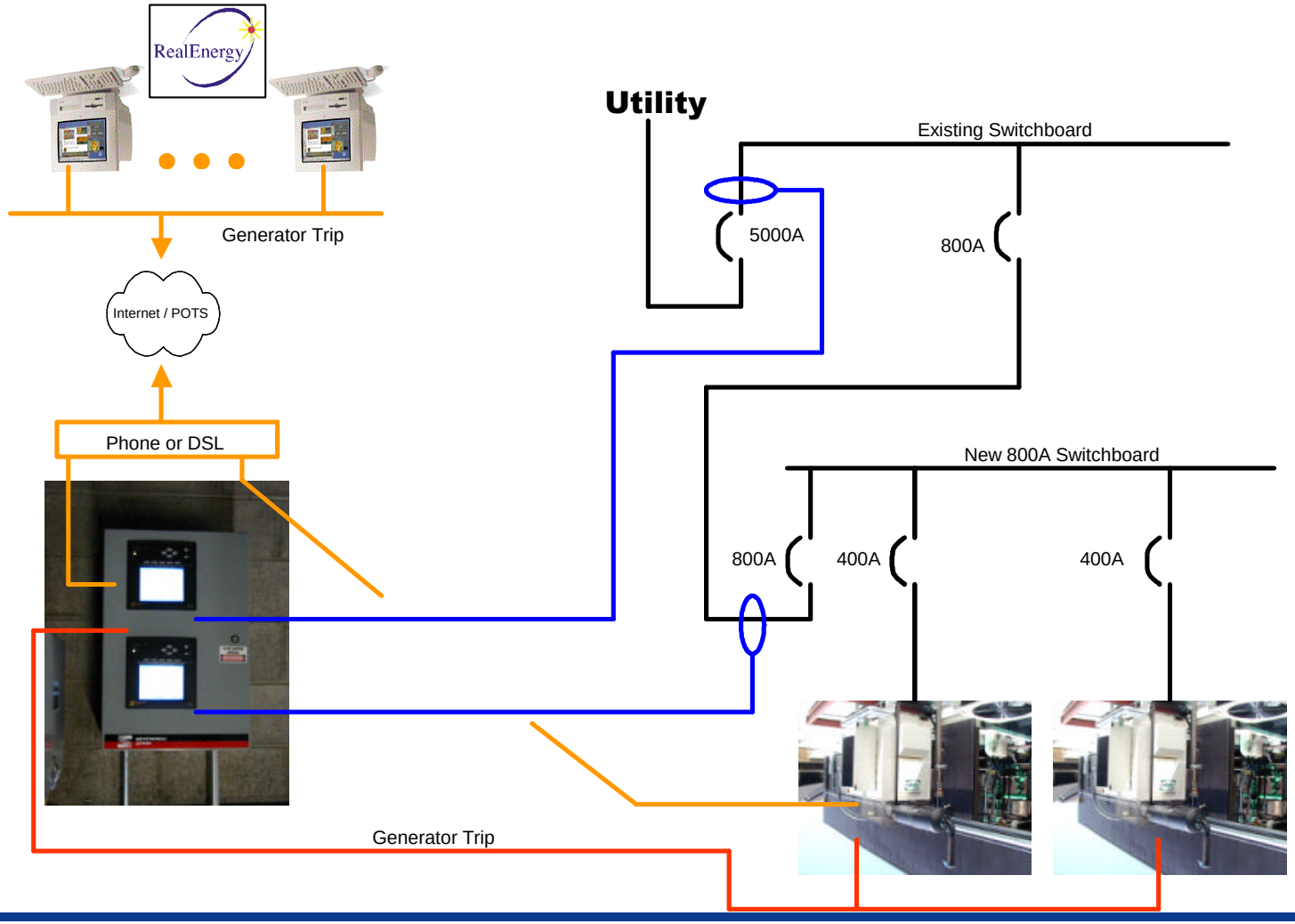

Alarming Response

ACTIVE ALERT: GeneseeGenerator_OFF-kWatts:3.42773 - Message (Plain Text)

File Edit View Insert Format Tools Actions Help

Type a question for help

Reply Reply to All Forward

From:

Sent: None

To: Brett Schumacher

Cc: Paul Abraham; Allan Padua; North Hefley; Christopher Leisgang; Thomas Adams; Steven Greenberg

Subject: ACTIVE ALERT: GeneseeGenerator_OFF-kWatts:3.42773

```
Mon 07/08/2002
 6:09p

Site:            Genesee_Exec_Plaza
Condition:       "GeneseeGenerator_OFF-kWatts:3.42773"

End of message
```

NAG Alarming

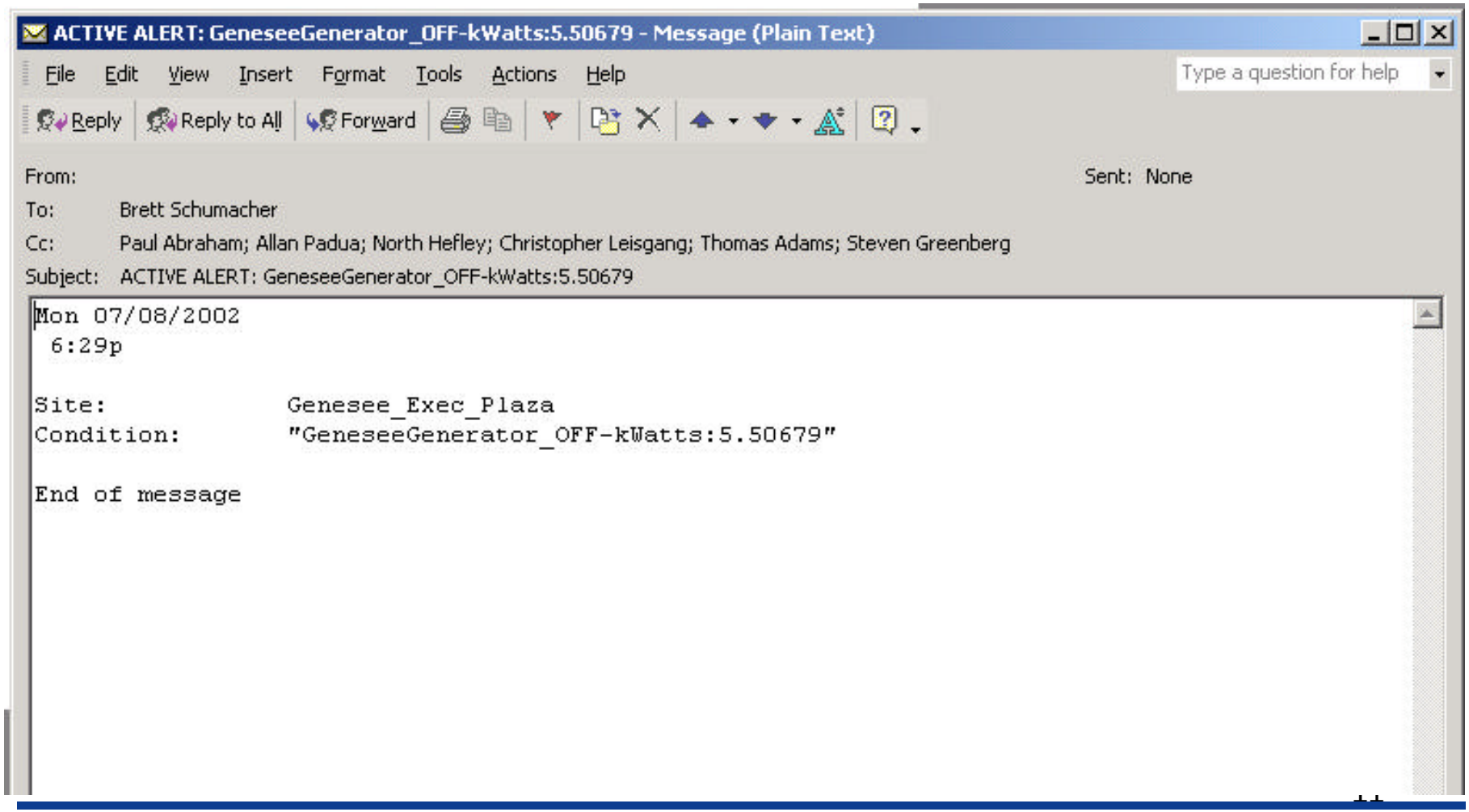

Alarming Response

ACTIVE ALERT: GeneseeGenerator_ON-kWatts:182.505 - Message (Plain Text)

File Edit View Insert Format Tools Actions Help

Type a question for help

Reply | Reply to All | Forward

From:

Sent: None

To: Brett Schumacher

Cc: Paul Abraham; Allan Padua; North Hefley; Christopher Leisgang; Thomas Adams; Steven Greenberg

Subject: ACTIVE ALERT: GeneseeGenerator_ON-kWatts:182.505

```
Mon 07/08/2002
 7:11p

Site:            Genesee_Exec_Plaza
Condition:       "GeneseeGenerator_ON-kWatts:182.505"

End of message
```

Full Monitor & Control System

- Flagship Design
  - Metering
  - Monitoring
  - Alarming
  - Billing
  - Control
- 42 Monitor / Control Points
- Controlled through Primary Logic Controller (PLC)
  - Unlimitted Digital Inputs / Outputs
  - Unlimited Analog Inputs / Outputs
  - 37 Meter / Monitor / Alarm
  - 7 Control
    - 4 Variable Frequency Drives
    - Cogen System Start / Stop
    - Chiller Start / Stop
    - Building Control System (BCS) Load Acceptance
      - Hot Water
      - Chilled Water

RealEnergy Monitor / Control Package / Central Plant

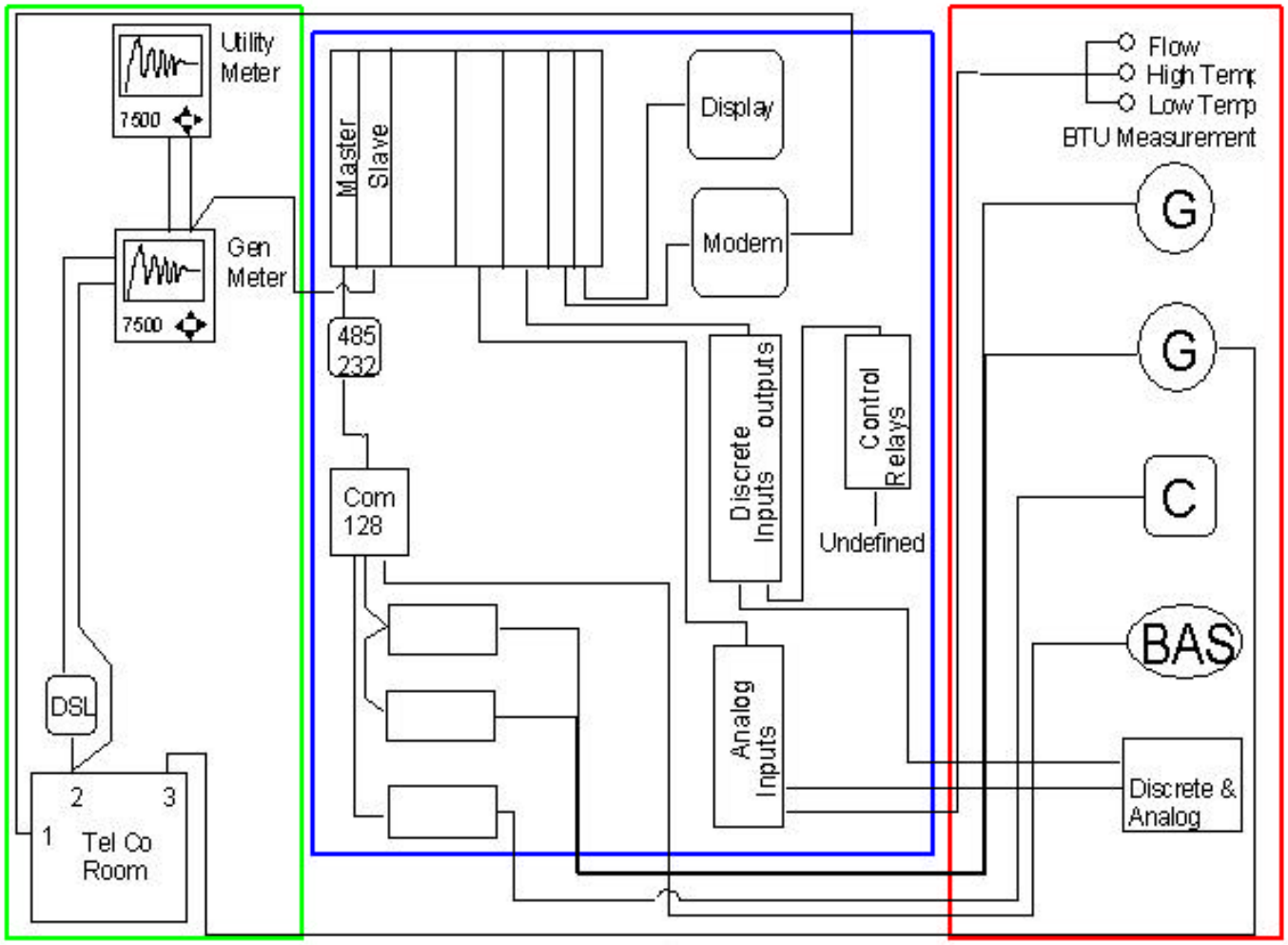

Full Monitor & Control System

- Deployment limited
  - Currently only 2 sites being fitted with this system
    - Hotel – Acting as Central Plant
    - Large Commercial Building as “Beta Site”
  - Pro’s
    - Extensive systems control
    - Unlimited Expansion
    - Ability to remotely troubleshoot
      - Meters
      - PLC
      - Gensets
  - Con’s
    - Expensive to build
    - Not practical for portfolio distribution
    - Requires more sophisticated Operations Personnel to understand and use the system to capacity

Reduced Scope Control System

- Deployment limited
  - Currently only 1 sites being fitted with this system
    - Large Commercial Building as “Beta Site”
  - Pro’s
    - Required systems control
    - Ability to remotely troubleshoot
    - Cost Effective
    - Requires only small amount of new hardware
  - Con’s
    - Testing the limits of installed hardware base
    - Limited Expansion Capabilities
    - Expansion will degrade performance

RealEnergy Monitoring / Control Package 2

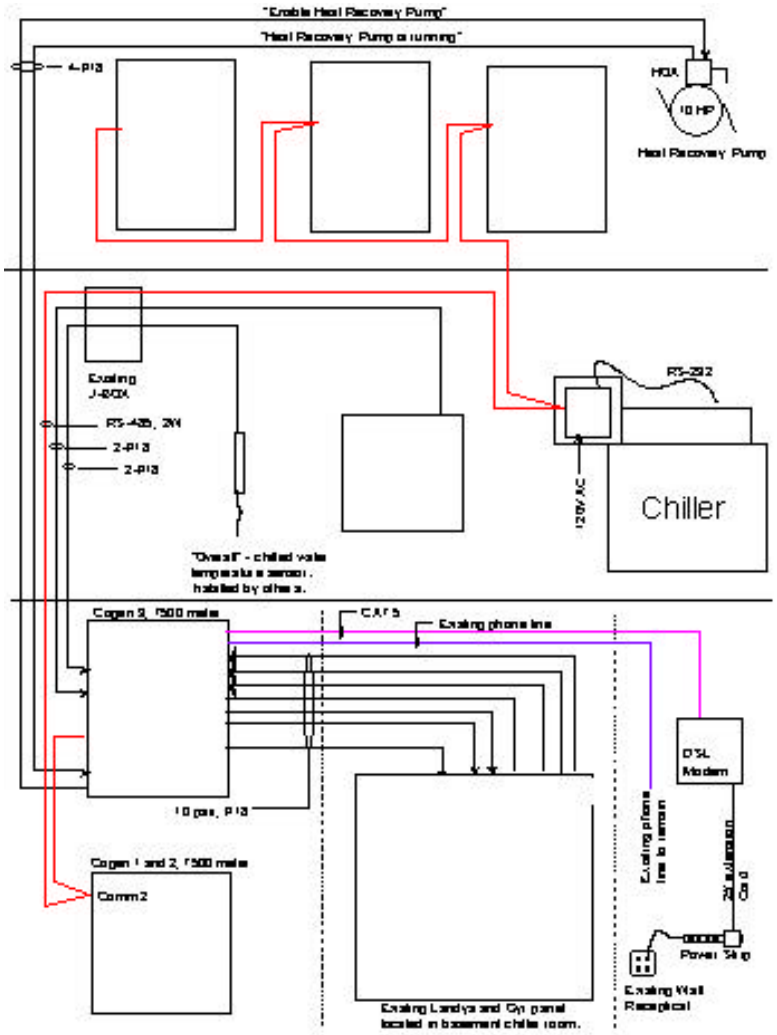

Data Collection Statistics

- Daily Data Per Site
  - 42 Points = 1.27MB
  - 15 Sites = 630 Points Total
  - 1.27Mb x 7 Days = 8.89Mb Per Week
  - 8.89Mb x 52 Weeks = 462.28Mb Per Year
- RealEnergy Financial / Analysis Groups Department require 12 months rolling live data.
- All data is backed up “Twice” Daily to tape.
  - 12 Noon
  - Midnight

Progress

- 17 Sites Built
  - 13 Internal Combustion Sites
    - Varying from 200MW to 1000MW
  - 3 Solar Sites
  - 1 Microturbine Site
    - 60MW
- 15 Sites Running at near capacity
- 5 Sites Nearing completion
  - 400MW to 1000KW
- 1 Hospitality Site
  - 200KW
  - RealEnergy is serving as Central Plant
  - Complete design build from scratch
- Broadband rollout in progress