Software Tools for Building Envelopes: EnergyPlus: New, Capable and Linked

Drury B. Crawley
Member ASHRAE

Linda K. Lawrie
Member ASHRAE

Frederick C. Winkelmann, Ph.D.
Member ASHRAE

W.F. Buhl

Curtis O. Pedersen
Fellow ASHRAE

Richard K. Strand, Ph.D.
Member ASHRAE

Richard J. Liesen, Ph.D.
Associate Member ASHRAE

Daniel E. Fisher, Ph.D., P.E.
Member ASHRAE

Michael J. Witte, Ph.D.
Member ASHRAE

Robert H. Henninger, P.E.

Jason Glazer, P.E.
Associate Member ASHRAE

Don B. Shirey
Member ASHRAE

ABSTRACT

For more than two decades, the U.S. government supported the development of two hourly building energy simulation programs—BLAST and DOE-2. Designed in the days of mainframe computers, expanding their capabilities further became increasingly difficult, time-consuming, and expensive. For these reasons, a U.S. federal agency began developing a new building energy simulation tool in 1996. This new simulation program, known as EnergyPlus, builds on the capabilities and features of BLAST and DOE-2 and was released in April 2001.

EnergyPlus includes a number of innovative simulation features (such as variable time steps, configurable modular systems that are integrated with a heat balance-based zone simulation) and input and output data structures tailored to facilitate third-party module and interface development. Other planned simulation capabilities include multizone airflow and electric power and solar thermal and photovoltaic simulation. EnergyPlus will also be linked to two other simulation programs—TRNSYS (solar thermal, photovoltaic, and complex HVAC systems) and SPARK (complex HVAC systems). As we neared completion of EnergyPlus version 1.0, the development team began working with interface developers so that easy-to-use interfaces would be available soon after EnergyPlus version 1.0 was released. Beginning in late 1999, a series of five beta versions were released for testing. Version 1.0 of EnergyPlus was released in April 2001.

INTRODUCTION

For more than twenty years, the U.S. government supported development of two building energy simulation programs—DOE-2 and BLAST. BLAST (Building System Laboratory 1999), sponsored by the U.S. Department of Defense (DOD), has its origins in the NBSLD program developed at the U.S. National Bureau of Standards (now NIST) in the early 1970s. DOE-2 (Winkelmann et al. 1993), sponsored by the U.S. Department of Energy (DOE), has its origins in the program written in the late 1960s for the U.S. Post Office. Both programs are widely used throughout the world. The main difference between the programs is load calculation method—DOE-2 uses a room weighting factor approach while BLAST uses a heat balance approach.

Each program comprises hundreds of subroutines working together to simulate heat and mass energy flows throughout a building. In some cases, subroutines in DOE-2 were more accurate. In other cases, subroutines in BLAST were more accurate. In both cases, simulation methodologies were often difficult to trace due to decades of development (and multiple authors). This often results in "spaghetti code," with data and subroutines for a particular simulation capability spread throughout the program. To modify either program, a developer must have many years of experience working within the code, knowledge of code unrelated to their task (because of the spaghetti), and (often for sponsors) an extraordinary investment of time and money.

Many people questioned why the U.S. government was supporting two separate (with comparable capability) programs. Discussions on merging the two programs began in earnest in 1994 with a DOD-sponsored workshop. Although nothing concrete resulted from that workshop, DOE eventu-

Drury B. Crawley is program manager for the U.S. Department of Energy, Washington, D.C. **Curtis O. Pedersen** is a professor and **Richard J. Liesen** is associate director of Building Systems Laboratory at the University of Illinois at Urbana-Champaign, Urbana, Ill. **Michael J. Witte, Robert H. Henninger,** and **Jason Glazer** are principal engineers at GARD Analytics, Inc., Park Ridge, Ill. **Linda K. Lawrie** is a researcher at USA CERL, Champaign, Ill. **Richard K. Strand** is an assistant professor in the School of Architecture, University of Illinois, Champaign, Ill. **Frederick C. Winkelmann** is a staff scientist and **W.F. Buhl** is senior scientific/engineering associate at Lawrence Berkeley National Laboratory, Berkeley, Calif. **Daniel E. Fisher** is an assistant professor at Oklahoma State University, Stillwater, Okla. **Don B. Shirey** is program manager at the Florida Solar Energy Center, Cocon, Fl.

ally took the initiative and began developing a new program named EnergyPlus in 1996. The EnergyPlus team includes U.S. Army Construction Engineering Research Laboratory (CERL), University of Illinois (UI), Lawrence Berkeley National Laboratory (LBNL), Oklahoma State University (OSU), GARD Analytics, Florida Solar Energy Center, and DOE. In this paper, we present an overview of the organization and capabilities of EnergyPlus and explain the rationale and structure behind the overall program.

What is EnergyPlus?

When DOD ended support for BLAST in 1995 due to budget constraints, we took the opportunity to combine the resources, teams, and best capabilities and features of BLAST and DOE-2. (The last version of BLAST was released in the spring of 1998, and the last version of DOE-2, with contributions under DOE sponsorship, was released in spring 1998). Initially, we thought that we could create a "best of" program—combining modules from the two programs—without starting from scratch. After initial developmental work, we determined that EnergyPlus would cost less to develop, be released faster, and be easier to modify and extend if we wrote all new code.

EnergyPlus comprises completely new, modular, structured code based on the most popular features and capabilities of BLAST and DOE-2. It is primarily a simulation engine—we did not develop a user-friendly graphical interface. Figure 1 shows screen images of EnergyPlus utilities and example results. Input and output are simple, comma-separated, ASCII text files—much simpler input than either DOE-2 or BLAST. Both BLAST and DOE-2 have successfully attracted third-party developers to create user interfaces and new modules. During EnergyPlus beta testing, we invited these same developers to work with the development team on new simulation modules or develop their own user interfaces.

Modular Code

One of the main goals we set for developing EnergyPlus was to create a well-organized, modular structure to facilitate adding features and links to other programs. In evaluating programming languages, we found we had two choices—move to C/C++ or stay with Fortran. Despite the advantages of the structure and object-orientation of C/C++, we decided to select Fortran 90 as the programming language for EnergyPlus because Fortran 90

- is a modern, modular language with good compilers on many platforms,
- allows C-like data structures and mixed language modules,
- provides structure that begins to be object-based,
- allows long variable names (up to 32 characters), and
- provides backward compatibility during the developmental process.

We began working on EnergyPlus by modularizing (restructuring) code from the heat balance engine in IBLAST, a research version of BLAST with integrated loads and HVAC calculation (Taylor et al. 1991, 1990). Normally, such restructuring would result in major rewrites involving a long developmental period and extensive testing to ensure new code performs as intended. However, because the EnergyPlus team selected Fortran 90 (and Fortran 77 is a subset of Fortran 90), development proceeded through a process we call evolutionary reengineering (ER). Through this process, we incrementally moved the program from old, unstructured legacy code to new modular code by incorporating the new code with the old. The existing code still worked with user input data and was extended to generate parameters needed by the new code modules. In this way, new modules were verified without having to completely replace the entire functional capability of the old program with new code before it was tested. As the process proceeds, the parameters supplied by old routines are replaced by new routines and data structures. This makes the transition evolutionary and permits a smooth transition with a greater capability for verification testing.

ENERGYPLUS STRUCTURE

In two workshops on next generation energy tools sponsored by DOE (Crawley et al. 1997), there was strong consensus that a more flexible and robust tool with additional capabilities was needed. One of the highest priorities was an integrated (simultaneous loads and systems) simulation for accurate temperature and comfort prediction. In response to these findings, we decided that integrated simulation should be the underlying concept for EnergyPlus. Loads calculated (by a heat balance engine) at a user-specified time step (15-minute default) are passed to the building systems simulation module at the same time step. The building systems simulation module, with a variable time step (down to seconds), calculates heating and cooling system and plant and electrical system response. Feedback from the building system simulation module on loads not met is reflected in the next time step of the load calculations in adjusted space temperatures if necessary.

By using an integrated solution technique in EnergyPlus, the most serious deficiency of BLAST and DOE-2 is solved—inaccurate space temperature predication due to no feedback from the HVAC module to the loads calculations. Accurate prediction of space temperatures is crucial to energy efficient system engineering—system size, plant size, occupant comfort, and occupant health are dependent on space temperatures.

Integrated simulation also allows users to evaluate a number of processes that neither BLAST nor DOE-2 can simulate well. Some of the more important of these include:

- Realistic system controls
- Moisture adsorption and desorption in building elements

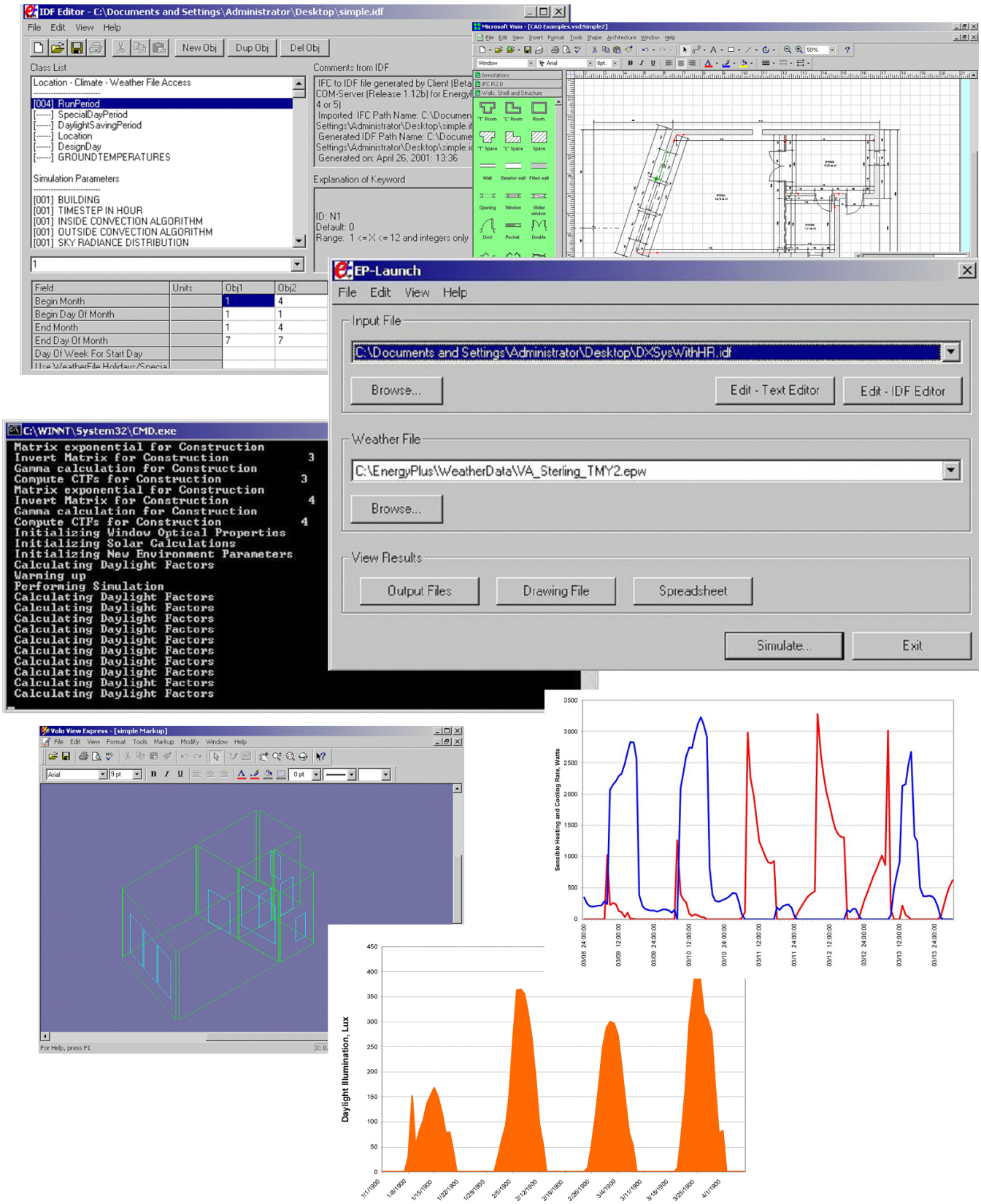

Figure 1 *Screen images of EnergyPlus utilities and results.*

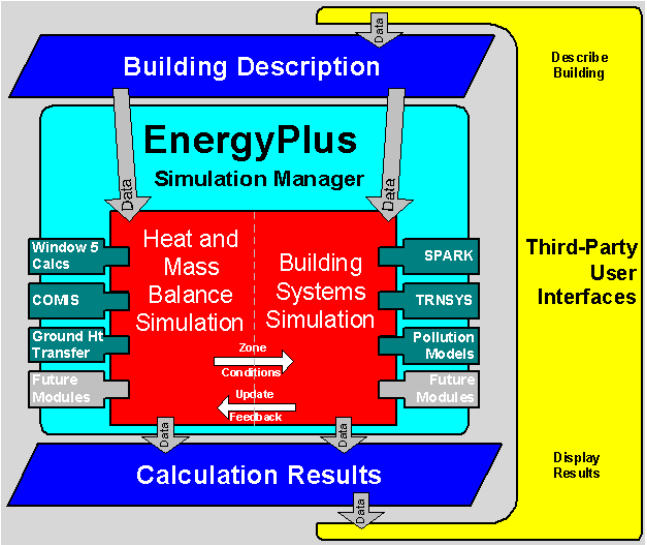

Figure 2 *Overall EnergyPlus structure.*

- Radiant heating and cooling systems
- Interzonal air flow

Figure 2 shows the overall program structure. EnergyPlus has three basic components—a simulation manager, a heat and mass balance simulation module, and a building systems simulation module. The simulation manager controls the entire simulation process. The heat balance calculations are based on IBLAST, a research version of BLAST with integrated HVAC systems and building loads simulation.

A new building systems simulation manager handles communication between the heat balance engine and various HVAC modules and loops, such as coils, boilers, chillers, pumps, fans, and other equipment/components. (In the first release, the building systems simulation manager only had HVAC systems and equipment/components. Future releases of EnergyPlus will include electrical system simulation.) The building system simulation manager also controls interaction and data exchange between EnergyPlus and SPARK (Buhl et al. 1993) and TRNSYS (Solar Energy Laboratory 2000) simulations. The hardwired "template" systems (VAV, Constant Volume Reheat, etc.) of DOE-2 and BLAST are gone—they were replaced by user-configurable heating and cooling equipment components formerly within the template. This gives users much more flexibility in matching their simulation to the actual system configurations. The building systems simulation module also manages data communication between the HVAC modules, input data, and output data structures.

A comparison of major features and capabilities of EnergyPlus, BLAST, IBLAST, and DOE-2 is shown in Tables 1, 2, and 3. Table 1 shows general features, Table 2 load calculation features, and Table 3 HVAC features. The simulation manager, heat balance simulation manager, and building systems simulation manager are described in more detail below.

Simulation Management

At the outermost program level, the Simulation Manager controls the interactions between all simulation loops from a sub-hour level up through the user-selected time step and simulation period, whether day, month, season, year, or several years. Actions of individual simulation modules are

TABLE 1
Comparison of General Features and Capabilities

General Feature	DOE-2	BLAST	IBLAST	EnergyPlus
Integrated, Simultaneous Solution • Integrated loads/systems/plant • Iterative solution • Tight coupling	No	No	**Yes**	**Yes**
Multiple Time Step Approach • User-defined time step for interaction between zones and environment (15-min default) • Variable time-step for interactions between zone air mass and HVAC system (≥ 1 min)	No	No	**Yes**	**Yes**
Input Functions • Users can modify code without recompiling	**Yes**	No	No	**Yes**
Reporting Mechanism • Standard reports • User-definable reports • Visual surface output	**Yes** No No	**Yes** No No	**Yes** No No	**Yes** **Yes** **Yes**

TABLE 2
Comparison of Loads and Features and Capabilities

Loads Feature	DOE-2	BLAST	IBLAST	EnergyPlus
Heat Balance Calculation				
• Simultaneous calculation of radiation and convection processes each time step	No	**Yes**	**Yes**	**Yes**
Interior Surface Convection				
• Dependent on temperature and air flow	No	**Yes**	**Yes**	**Yes**
• Internal thermal mass	**Yes**	**Yes**	**Yes**	**Yes**
Moisture Absorption/Desorption				
• Combined heat and mass transfer in building envelopes	No	No	**Yes**	**Yes**
Thermal Comfort				
• Human comfort model based on activity, inside dry-bulb, humidity, and radiation	No	**Yes**	**Yes**	**Yes**
Anisotropic Sky Model				
• Sky radiance depends on sun position for better calculation of diffuse solar on tilted surfaces	**Yes**	No	No	**Yes**
Advanced Fenestration Calculations				
• Controllable window blinds	**Yes**	No	No	**Yes**
• Electrochromic glazing				
WINDOW 5 Calculations				
• More than 200 window types—conventional, reflective, low-E, gas-fill, electrochromic	**Yes**	No	No	**Yes**
• Layer-by-layer input for custom glazing	No	No	No	**Yes**
Daylighting Illumination and Controls				
• Interior illuminance from windows and skylights	**Yes**	No	No	**Yes**
• Step, dimming, on/off luminaire controls				
• Glare simulation and control				
• Effects of dimming on heating and cooling				

directed by the simulation manager, instructing simulation modules to take actions such as initialize, simulate, record keep, or report.

We created the simulation manager to specifically address the legacy issues of spaghetti code and lack of structure in DOE-2 and BLAST. The simulation manager provides several critical benefits:

- major simulation loops are contained in a single module
- modules are self-contained and more object-based
- data access is controlled
- new modules are easily added

Heat and Mass Balance

As noted earlier, the underlying building thermal zone calculation method in EnergyPlus is a heat balance model. The fundamental assumption of heat balance models is that air in each thermal zone can be modeled as well stirred with uniform temperature throughout. Although this does not reflect physical reality well, the only current alternative is computational fluid dynamics (CFD)—a complex and computationally intensive simulation of fluid (in this case, air) movement. Currently, CFD is most useful in research applications. Several groups are developing models somewhere between the well-stirred model and a full CFD calculation. The modular structure of EnergyPlus allows these new models to be included in future releases once they are available. The other major assumption in heat balance models is that room surfaces (walls, windows, ceilings, and floors) have

- uniform surface temperatures,
- uniform long- and short-wave irradiation,
- diffuse radiating surfaces, and
- one-dimensional heat conduction.

TABLE 3
Comparison of HVAC Features and Capabilities

HVAC Systems and Equipment Feature	DOE-2	BLAST	IBLAST	EnergyPlus
Fluid Loops • Connect primary equipment and coils • Hot water loops, chilled water and condenser loops, refrigerant loops	No	No	No	**Yes**
Air Loops • Connect fans, coils, mising boxes, zones	No	No	No	**Yes**
User-Configurable HVAC Systems	No	No	No	**Yes**
High-Temperature Radiant Heating • Gas/electric heaters, wall radiators	No	**Yes**	**Yes**	**Yes**
Low-Temperature Radiant Heating/Cooling • Heated floor-ceiling • Cooled ceiling	No	No	**Yes**	**Yes**
Atmospheric Pollution Calculation • CO_2, SO_x, NO_x, CO, particulate matter, and hydrocarbon production • On-site and at power plant • Calculate reductions in greenhouse gases	**Yes**	**Yes**	No	**Yes**
SPARK link	No	No	No	**Yes**
TRNSYS link	No	No	No	**Yes**

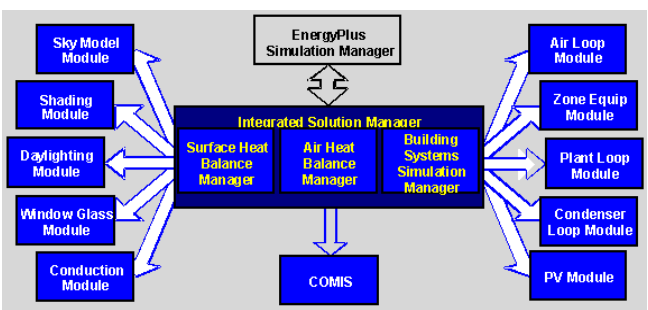

Figure 3 *Integrated simulation manager.*

Figure 3 shows the structure of the EnergyPlus integrated solution manager that manages the surface and air heat-balance modules and acts as an interface between the heat balance and the building systems simulation manager. The surface heat balance module simulates inside and outside surface heat balance; interconnections between heat balances and boundary conditions; and conduction, convection, radiation, and mass transfer (water vapor) effects. The air mass balance module deals with various mass streams, such as ventilation air, exhaust air, and infiltration. It accounts for thermal mass of zone air and evaluates direct convective heat gains. Through this module, we are connecting to COMIS (Huang et al. 1999) for improved multizone airflow, infiltration, indoor contaminant, and ventilation calculations.

In addition to the basic heat and mass balance engine from IBLAST, we created three new modules based on capabilities within DOE-2: daylighting illumination (Winkelmann and Selkowitz 1985), WINDOW 5-based fenestration (Arestah et al. 1994), and anisotropic sky. The daylighting module calculates interior daylight illuminance, glare from windows, glare control, and electric lighting controls (on/off, stepped, continuous dimming) and calculates electric lighting reduction for the heat balance module. In the future, the daylighting module will include an improved interior interreflection calculation, reflection from neighboring buildings, and handling of complex fenestration systems (such as blinds, light shelves, and roof monitors). The fenestration module includes capabilities from the soon-to-be released WINDOW 5—accurate angular dependence of transmission and absorption for both solar and visible radiation and temperature-dependent U-factor. Users can enter a layer-by-layer window description or choose windows from the library (conventional, reflective, low-e, gas fill, electrochromic). For sun control, movable interior and exterior window shades and electrochromic glazing can be simulated. The WINDOW 5 algorithms now also account for coatings and framing elements. The sky model includes nonisotropic radiance and luminance distribution throughout the sky based on an empirical model (Perez et al. 1991, 1990) as a function of sun position and cloud cover. This nonuniform radiance distribution improves calculation of

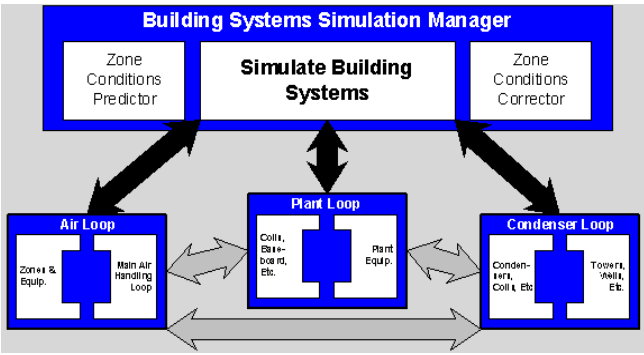

Figure 4 *Building systems simulation manager.*

diffuse solar on tilted surfaces (walls and sloped roofs). More information on the window calculations within EnergyPlus are provided by Winkelmann (2001).

Several other modules have been reengineered for inclusion in EnergyPlus: solar shading from BLAST and conduction transfer function calculations from IBLAST. The major enhancements of the IBLAST (and EnergyPlus) heat balance engine over BLAST include mass transfer and radiant heating and cooling. The mass transfer capability within EnergyPlus allows fundamental, layer-by-layer solution for mass transfer through surfaces and a mass balance on zone air similar to the air heat balance. The radiant heating and cooling models are an expansion of the conduction transfer function and incorporate thermal comfort calculations. This provides a means for improved modeling and control capabilities for the new building system simulation manager.

One last important feature of the EnergyPlus heat balance engine is that it is essentially identical in functionality to the Loads Toolkit recently completed by UI under ASHRAE Research Project 987. UI developed both the Loads Toolkit and the EnergyPlus heat and mass balance engine and used the programming standard developed in the EnergyPlus project to produce the Loads Toolkit (Pedersen et al. 2001). Both projects benefit—modularization efforts started by EnergyPlus will be useful in the Loads Toolkit and new component models developed for the Loads Toolkit will enhance EnergyPlus. Strand and Pedersen (2001) provide more information on the heat and mass balance implementation in EnergyPlus in comparison with the ASHRAE Loads Toolkit.

Building Systems Simulation Manager

After the heat balance manager completes simulation for a time step, it calls the Building Systems Simulation Manager, which controls the simulation of HVAC and electrical systems, equipment, and components and updates the zone-air conditions (see Figure 4). EnergyPlus does not use a sequential simulation method (first building loads, then air distribution system, and then central plant) as found in DOE-2 and BLAST since this imposes rigid boundaries on program structures and limits input flexibility. Instead, we designed the building system simulation manager with several objectives in mind:

- fully integrated simulation of loads, systems, and plant
- modular
- extensible

Integrated simulation models' capacity limits more realistically and tightly couples the air and water side of the system and plant. Modularity is maintained at both the component and system level. This eases adding new components and flexibly modeling system configurations, and, at the system level, equipment and systems are clearly connected to zone models in the heat balance manager. To implement these concepts, we use loops throughout the building system simulation manager—primarily HVAC air and water loops. Loops mimic the network of pipes and ducts found in real buildings and eventually will simulate head and thermal losses that occur as fluid moves in each loop. As mentioned earlier, EnergyPlus has no hardwired "template" systems. Instead, we are developing equivalent input file templates for each of the major system types in BLAST and DOE-2. These templates provide an easy starting point for users to develop inputs for system configurations that differ from "default" configurations. The air loop simulates air transport, conditioning, and mixing and includes supply and return fans, central heating and cooling coils, heat recovery, and controls for supply air temperature and outside air economizer. The air loop connects to the zone through the zone equipment. Zone equipment includes diffusers, reheat/recool coils, supply air control (mixing dampers, fan-powered VAV box, induction unit, VAV dampers), local convection units (window air-conditioner, fan coil, water-to-air heat pump, air-to-air heat pump), high-temperature radiant/convective units (baseboard, radiators), and low-temperature radiant panels. Figure 5 shows equipment connections to zones. (Note that more than one equipment type can be specified for a zone. However, users must specify equipment in the order it will be used to meet zone heating and cooling demand.)

For the air loop, the solution method is iterative, not "single-pass" as in DOE-2 and BLAST. In order to specify equipment connections to a loop, nodes are defined at key locations around the loop with each node assigned a unique numeric identifier as shown in Figure 6. Node identifiers store loop-state variables and setpoint information for that location in the loop. We use an iterative solution technique to solve for unknown state variables along with control equation representations. These representations connect the setpoints at one node with the control function of a component, such as fan damper position and cooling coil water flow rate. In this schema, all the loop components are simulated first, and then the control equations are updated using explicit finite difference. This procedure continues until the simulation converges. Typical control schemes are included in the input file templates described earlier.

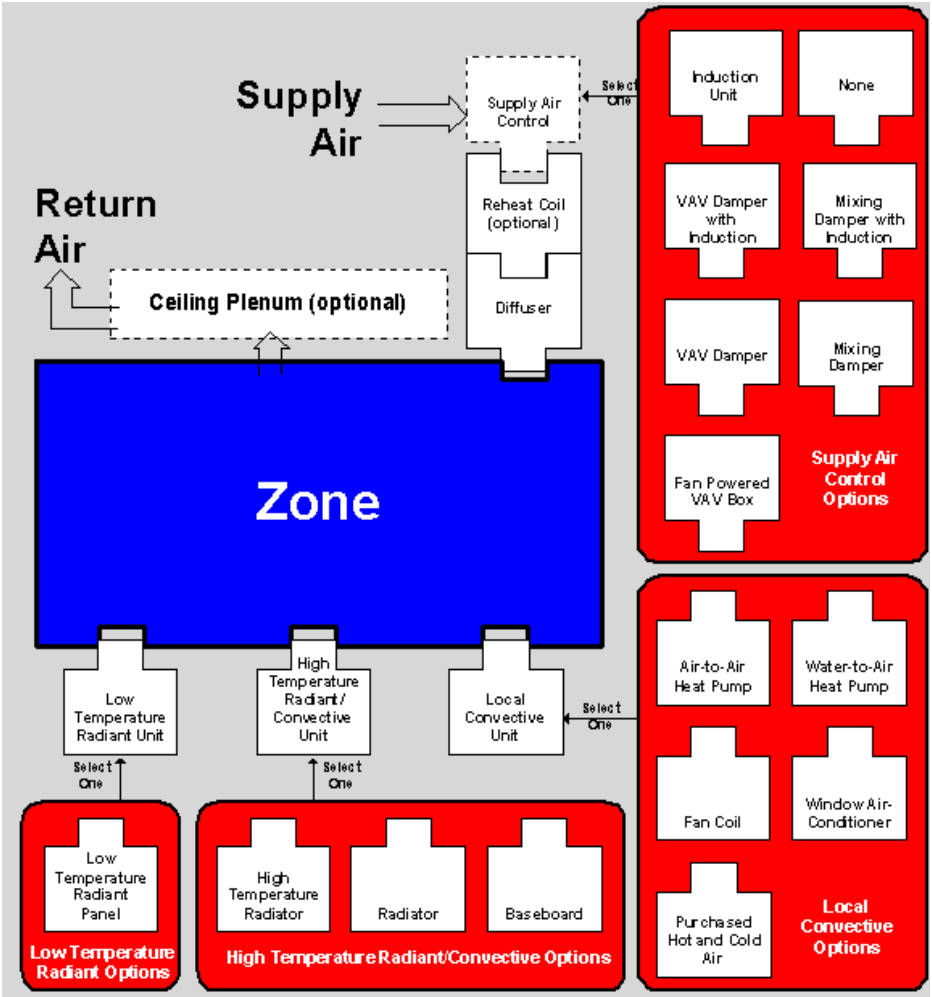

Figure 5 *Zone equipment module.*

There are two loops for HVAC plant equipment—a primary loop (for supply equipment such as boilers, chillers, thermal storage, and heat pumps) and a secondary loop (for heat rejection equipment such as cooling towers and condensers). Figure 7 presents a schematic view of equipment connections on the primary plant loop. Equipment is specified by type (gas-fired boiler, open drive centrifugal chiller) and its operating characteristics. In the first release of EnergyPlus, we are supporting performance-based equipment models (such as in BLAST and DOE-2), but because of the modular code, it will be easy for developers to add other types of models. As in the air loop, the primary and secondary plant loops use explicit nodes to connect equipment to each loop. Connections between the air loop and zone equipment and the primary and secondary loops are made through the node data structure and must be explicitly defined in the input file. Fisher et al. (1999) provide additional information about the modular, loop-based approach to building systems simulation in EnergyPlus. A similar loop approach is proposed for a new electrical loop for simulating electrical systems—supply (utility, photovoltaic modules, and fuel cells), demand (plug loads, lighting, and other electrical loads), and measurement (meters).

In the longer term, EnergyPlus users will have more systems and equipment options through a link to SPARK (Buhl et al. 1993)—an equation-based simulation tool. SPARK is a better solver for complex iterative problems. SPARK already has a library of HVAC components based on the ASHRAE primary and secondary toolkits (Lebrun et al. 1999; Brandemuehl et al. 1993). EnergyPlus will continue to have system types (in input file templates), but developers and advanced users will be able to easily build complex new HVAC models with SPARK. A similar link is under development to the TRNSYS simulation model (Solar Energy Laboratory 2000), which will provide users with photovoltaic, and solar thermal simulation models as well as additional HVAC system and plant models.

INPUT, OUTPUT, AND WEATHER DATA

Both DOE-2 and BLAST have highly structured, but user readable, input file definitions that have evolved over many years. Instead of user readability, we designed the EnergyPlus

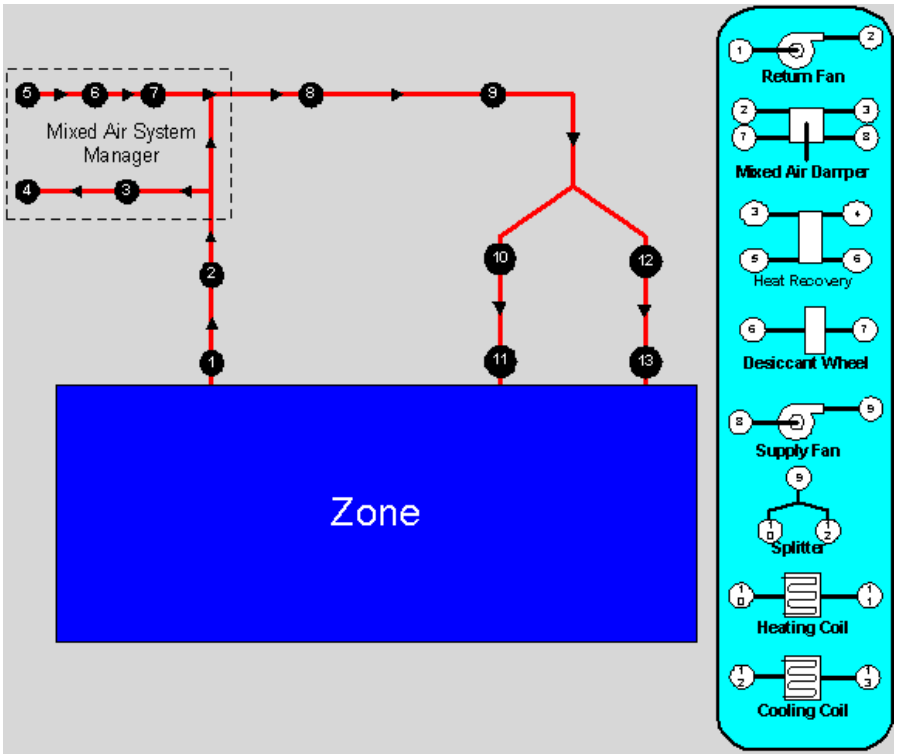

Figure 6 *Simple air loop node diagram.*

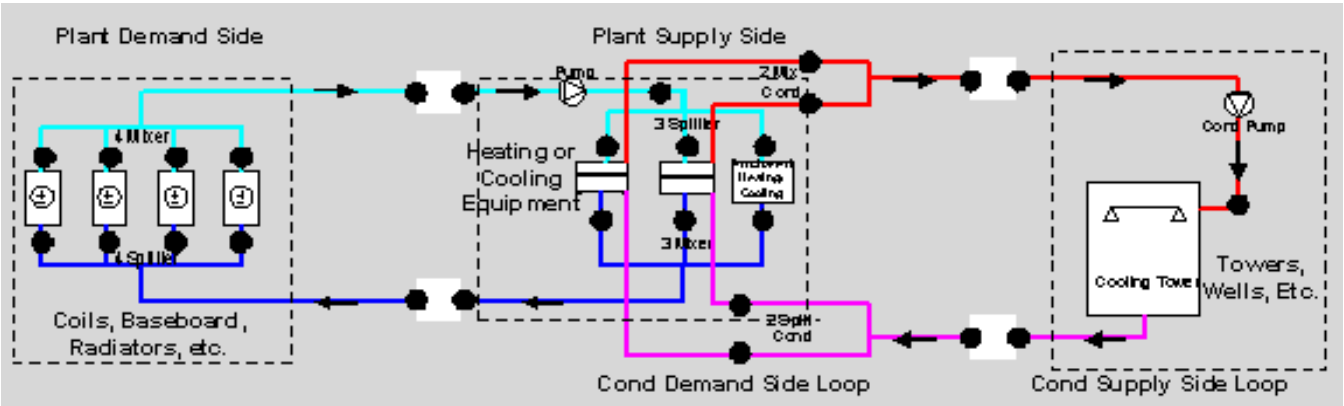

Figure 7 *Example plant loop.*

input files for easy maintenance and expansion. We chose to keep the input file simple in order to accept simulation input data from other sources, such as CAD systems, programs that also do other functions, and pre-processors similar to those written for BLAST and DOE-2. An EnergyPlus input file, while readable, is cryptic and definitely not user-friendly—it is not intended to be the main interface for typical end-users. We expect most users will use EnergyPlus through an interface from a third-party developer. To make it easy for current DOE-2 and BLAST users to move to EnergyPlus, the team has written utilities that convert BLAST and DOE-2 loads input to the new EnergyPlus input structure.

The International Alliance for Interoperability has been developing an object-oriented data protocol for building information exchange. Initial implementations of the Industry Foundation Classes (IFC) began appearing in building CAD programs in 2001. The IFC may become another means of sharing information among building programs, including EnergyPlus (Bazjanac and Crawley 1999).

EnergyPlus uses a free format input file that contains a complete object-based description of the building and its systems. The basic syntax is:

object, data, data, data, . . ., data;

Object is a predefined word denoting a building component, such as SURFACE, MATERIAL, LIGHTING, SYSTEM, HEATING COIL, and BOILER. This word is followed by a list of data values and terminates with a semicolon. These data describe performance characteristics and intended use for that object in the simulation.

Unlike BLAST and DOE-2, the input file must explicitly provide all information—there are very few default assumptions. Users may include comments throughout their input data file. A comparison of input file syntax for BLAST, DOE-2, and EnergyPlus is shown in Table 4.

The input file syntax is not hardwired within EnergyPlus; instead, EnergyPlus reads an input data dictionary at runtime to determine the syntax of the input data file. The general syntax of the input data dictionary is:

Object, A1 [an alpha], N1 [a number],...;

For example, for the EnergyPlus Location command, the data dictionary line is:

Location, A1 [Location Name], N1 [Latitude], N2 [Longitude], N3 [Time Zone], N4 [Elevation];

This tells the input processor that, for the location command, to expect one text field (A1) with the location name, and four numeric inputs (N1, N2, N3, and N4)—latitude, longitude, time zone, and elevation, respectively. Words in brackets [ ] describe the variable and its units (meters, liters/second, etc.).

During a simulation, EnergyPlus saves results for each time step in an output data structure and these results can be reported at each time step or aggregated to longer time intervals. This structure and subsequent output use a similar philosophy to the input—simple text files with a syntax of object, time stamp, data, data, data; . . . The output data are simple yet contains much of the simulation results so that users and interface developers can easily access specific results without modifying the calculation engine.

TABLE 4
Comparison of BLAST, DOE-2 (BDL), and Energy Plus Input

		BLAST	BDL (DOE-2)	EnergyPlus
Location (Simple Input)	Description	Location defined in library. Library includes name, latitude, longitude, elevation, and time zone.	Location information defined by input, defaults to information on weather file	Location information defined by input
	Input Syntax	LOCATION = Name;	BUILDING-LOCATION Latitude = W, Longitude = X, Altitude = Y, Time-Zone = Z	LOCATION, Name, Latitude, Longitude, Elevation, Time Zone
	Example Input	**LOCATION = CHICAGO**;	**BUILDING-LOCATION LATITUDE = 41.98 LONGITUDE = 87.90 ALTITUDE = 673 TIME-ZONE = 6 ..**	**LOCATION, Chicago, Illinois, USA, 41.98, -87.90, -6, 205;**
Material (More Complex)	Description	Material defined in library. Library includes material name, conductivity, density, specific heat, resistance, roughness, and moisture properties.	Material from library or defined input, includes thickness, conductivity, density, specific heat, or resistance. Thickness restated during Layer input (optional).	All material information defined by input.
	Input Syntax	TEMPORARY MATERIAL: Usname = (L = usn1, K = usn2, CP = usn3, D = usn4, ABS = usn5, TABS = usn6, R = usn7, TRANS = usn8, IR = usn9, FILMTRANS = usn10, REF = usn11, SC = usn12, roughness, asg); END;	A = Material, Thickness = W, Conductivity = X, Density = Y, Specific Heat = Z ..	MATERIAL, Name, Thickness, Conductivity, Density, Specific Heat, Roughness;
	Example Input	**Brick = (L = 0.3333, K = 5.6, CP = 0.19, D = 120, ROUGH);**	**BRICK = MATERIAL THICKNESS = 0.3333 CONDUCTIVITY = 5.6 DENSITY = 120 SPECIFIC-HEAT = 0.19 ..**	**MATERIAL, Brick, 0.1016, 0.721, 1922, 837, Medium**

Several report types are available—standard output (user-specified variables at specified time intervals), one-time output (such as input echo, input verification, and interim calculations), and visual surface output (including DXF outputs). Because the data structure is simple and comma-separated, output post-processors can easily read the data and create more elaborate reports. One drawback of our simple file format is that the output files can become very large.

The other major data input is weather. Rather than a binary file created by a separate weather processor, again we use a simple text-based format similar to the input data and output data files. The weather data format includes basic location information in the first eight lines: location (name, state/province/region, country), data source, latitude, longitude, time zone, elevation, peak heating and cooling design conditions, holidays, daylight savings period, typical and extreme periods, two lines for comments, and period covered by the data. The data are also comma-separated and contain much of the same data in the TMY2 weather data set (National Renewable Energy Laboratory 1995). EnergyPlus does not require a full year (8760 or 8784 hours) of data for its weather files. In fact, EnergyPlus allows and reads subsets of years and even sub-hourly (5 minute, 15 minute) data—the weather format includes a "minutes" field. EnergyPlus comes with a utility that reads standard weather service file types such as TD1440 and DATSAV2 and newer "typical year" weather files, such as TMY2, IWEC, and WYEC2. More information on the weather data format is contained in Crawley et al. (1999).

In summary, all the data files associated with EnergyPlus—input, output, and weather—have simple, self-contained formats, but they can become quite large. The data files can be easily read and interpreted by other programs—spreadsheets, databases, or custom interface programs. By working with third party interface developers early, we will keep these files simple and easy to use by other programs that building designers use.

ADDING A NEW MODULE

One of the main goals for EnergyPlus is to make it easy for developers to add new features and modules. The process is conceptually simple, with the following general steps:

1. Find (or develop your own) model.
2. Define the model parameters, equations, specialized coefficients, and needed data.
3. Modify for loop structure.
4. Determine the "plug-in" point, where the module will be called within EnergyPlus.
5. Write input specifications.
6. Determine the inputs that will be necessary to "execute" the model. Envision how this will be put into the EnergyPlus Input Data Dictionary/Input Data File structure.
7. Write new module(s); add call from higher-level manager.
8. Using the EnergyPlus Programming Standard and other developer documents, write the code—possibly breaking simulation tasks into modules.
9. Write GetInput.
10. Create the actual syntax in the Input Data Dictionary and produce the proper "GetInput" routine in the new module to obtain the data.
11. Finish the simulation routine.
12. Debug simulation routine; resolve snags associated with interactions with other loops.
13. Implement report variables; use to recheck results, repair model.

TESTING

A critical part of the EnergyPlus development has been continuous testing using several simultaneous paths. The primary emphasis to date has been on comparative and analytical testing. Comparative testing of basic loads algorithms has been completed using the ASHRAE Standard 140-2001 (ASHRAE 2001) series of tests, which consist of a basic shoebox with windows and shading for both low-mass and high-mass construction. Figure 8 shows sample EnergyPlus results compared against reference data for a number of other simulation programs provided with Standard 140. Analytical tests in progress include the BEPAC conduction tests (Bland 1993), which provide analytical solutions for conduction through a range of thicknesses for a variety of materials from aluminum to concrete. The conduction is driven by step, sine, and ramp exterior temperature functions. Comparative version testing of EnergyPlus against itself has been extremely useful in detecting and resolving problems introduced during development. The testing to date demonstrates that EnergyPlus provides results in good agreement with other simulation programs for simple cases. Testing will continue throughout the development of EnergyPlus and the results and methodologies will be made available to users as part of the EnergyPlus documentation. (For more information on the testing and validation of EnergyPlus, see Witte et al. 2001).

RELEASE 1.0 AND BEYOND

The initial working version of EnergyPlus, or alpha version, was completed in December 1998 for internal testing by the team. In May 1999, a first working version became available to outside developers. In December 1999, the first of five beta test versions of EnergyPlus was released for general testing by potential users. More than 1000 beta testers downloaded and tested EnergyPlus from late 1999 until EnergyPlus was first released in April 2001.

In 2001, we selected features for the second major release of EnergyPlus based on suggestions from users, developers, and the team. We plan to release the next major version of EnergyPlus (1.1) in 2003 with subsequent updates on an 18-month release cycle. Some new features already under development are improved ground heat transfer, electrical system

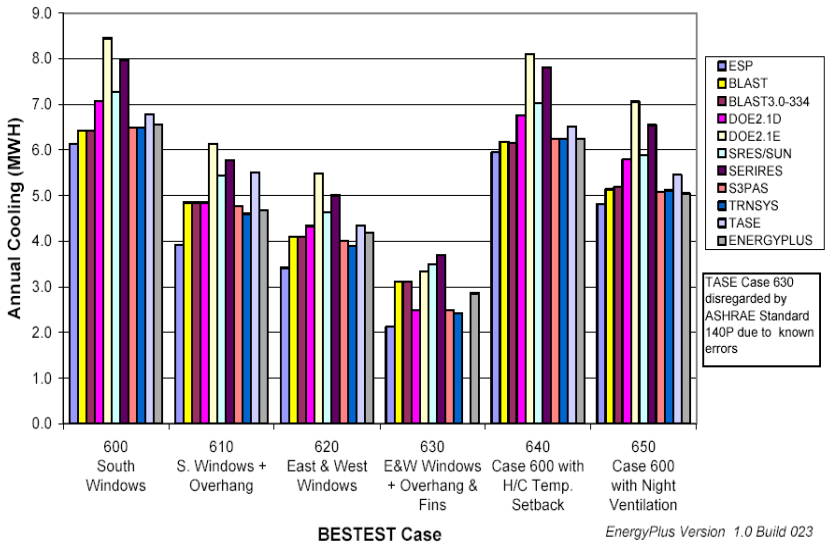

Figure 8 *Sample EnergyPlus comparative testing results.*

simulation, and solar thermal and photovoltaic modules. The link to COMIS will allow better calculation of infiltration, natural ventilation, multizone airflow, and air pollutant transport. The ground heat transfer model will allow either a simpler two-dimensional or more complex three-dimensional heat-transfer calculation for various foundation configurations.

SUMMARY

EnergyPlus is a new building energy simulation program that combines the best features of the BLAST and DOE-2 programs along with many new capabilities. Connectivity and extensibility to facilitate third party interface and module development were overall objectives throughout development. EnergyPlus not only combines the best features of the BLAST and DOE-2 programs but also represents a significant step forward in terms of computational techniques and program structures. We released EnergyPlus Version 1.0 in April 2001 and plan to release updates on a regular schedule. In mid-2001, we began planning new features to include in the second release of EnergyPlus based on suggestions by users, developers, and the team. Working with a coordinating group of users and developers, we have selected the features and capabilities for that release. New features already under development are electrical system simulation, fuel cells, advanced fenestration and daylighting, and other building technologies. These and other features will be included in the second major release (1.1) currently planned for 2003.

WEB RESOURCES

Information on EnergyPlus, including schedule, availability of beta releases, documentation, licensing, programming standards, and other documentation, may be found at

http://www.eren.doe.gov/buildings/energy_tools/energyplus.htm.

Web-based directory of more than 200 building-related software tools from around the world:

http://www.eren.doe.gov/buildings/tools_directory/

REFERENCES

ASHRAE. 2001. *Standard method of test of the evaluation of building energy analysis computer programs.* ANSI/*ASHRAE Standard 140-2001*, Atlanta: American Society of Heating, Refrigerating and Air-Conditioning Engineers, Inc.

Arasteh, D.K., E.U. Finlayson, and C. Huizenga. 1994. *Window 4.1: Program description*. Lawrence Berkeley National Laboratory, report no LBL-35298. Berkeley, Calif.: Lawrence Berkeley Laboratory.

Bazjanac, V., and D. Crawley. 1999. Industry foundation classes and interoperable commercial software in support of design of energy-efficient buildings. In *Proceedings of Building Simulation'99*, Volume II, pp. 661-668. Kyoto, Japan: IBPSA.

Bland, B.H. 1993. Conduction tests for the validation of dynamic thermal models of buildings. *BEPAC Technical Note 93/1*. BEPAC.

Brandemuehl, M.J., S. Gabel, and I. Andresen. 1993. *HVAC2 toolkit: Algorithms and subroutines for secondary HVAC system energy calculations*. Atlanta: American Society of Heating, Refrigerating and Air-Conditioning Engineers, Inc.

Building Systems Laboratory. 1999. *BLAST 3.0 Users Manual*. Urbana-Champaign, Ill.: Building Systems Laboratory, Department of Mechanical and Industrial Engineering, University of Illinois.

Buhl, W.F., A.E. Erdem, F.C. Winkelmann, and E.F. Sowell. 1993. Recent improvements in SPARK: Strong-component decomposition, multivalued objects and graphical editors. In *Proceedings of Building Simulation '93*, pp. 283-289. Adelaide, South Australia, Australia: IBPSA.

Crawley, D.B., J.W. Hand, and L.K. Lawrie. 1999. Improving the weather information available to simulation programs. In *Proceedings of Building Simulation '99*, Volume II, pp. 529-536. Kyoto, Japan: IBPSA.

Crawley, D.B., L.K. Lawrie, F.C. Winkelmann, W.F. Buhl, A.E. Erdem, C.O. Pedersen, R.J. Liesen, and D.E. Fisher. 1997. The next-generation in building energy simulation—A glimpse of the future. In *Proceedings of Building Simulation '97*, Volume II, pp. 395-402. Prague, Czech Republic: IBPSA.

Fisher, D.E., R.D. Taylor, F. Buhl, R.J. Liesen, and R.K. Strand. 1999. A modular, loop-based approach to HVAC energy simulation and its implementation in EnergyPlus. In *Proceedings of Building Simulation '99*. Kyoto, Japan: IBPSA.

Huang, J., F. Winkelmann, F. Buhl, C. Pedersen, D. Fisher, R. Liesen, R. Taylor, R. Strand, D. Crawley, and L. Lawrie. 1999. Linking the COMIS multi-zone airflow model with the EnergyPlus building energy simulation program. In *Proceedings of Building Simulation '99*, Volume II, pp.1065-1070. Kyoto, Japan: IBPSA.

LeBrun, J., J.P. Bourdouxhe, and M. Grodent. 1999. *HVAC1 toolkit: A toolkit for primary HVAC System energy calculation*, Atlanta: American Society of Heating, Refrigerating and Air-Conditioning Engineers, Inc.

National Renewable Energy Laboratory. 1995. *User's manual for TMY2s (Typical Meteorological Years)*, NREL/SP-463-7668, and TMY2s, Typical Meteorological Years Derived from the 1961-1990 National Solar Radiation Database, June 1995, CD-ROM. Golden, Colo.: NREL.

Pedersen, C.O., R.K. Strand, R.J. Liesen, and D.E. Fisher. 2001. *Loads toolkit 987-RP.* Atlanta: American Society of Heating, Refrigerating and Air-Conditioning Engineers, Inc.

Perez, R. R., P. Ineichen, R. Seals, J. Michalsk, and R. Stewart. 1990. Modeling daylight availability and irradiance components from direct and global irradiance. In *Solar Energy* 44: 271-289.

Perez, R.R., P. Ineichen, E. Maxwell, F. Seals, and A. Zelenda. 1991. Dynamic models for hourly global-to-direct irradiance conversion. In *1991 Solar world congress: Proceedings of the biennial congress of the international solar energy society*, Vol. 1, part II. pp. 951-956.

Solar Energy Laboratory. 2000. *TRNSYS Version 15 user manual and documentation*. Madison, Wisconsin: Solar Energy Laboratory, Mechanical Engineering Department, University of Wisconsin.

Strand, R.K., and C.O. Pedersen. 2001. Modularization and simulation techniques for heat balance based energy and load calculation programs: The experience of the ASHRAE loads toolkit and EnergyPlus. In *Proceedings of Building Simulation 2001*. Rio de Janiero, Brazil: IBPSA.

Taylor, R.D., C.O. Pedersen, and L.K. Lawrie. 1990. Simultaneous simulation of buildings and mechanical systems in heat balance based energy analysis programs. In *Proceedings of the 3rd International Conference on System Simulation in Buildings*. Liege, Belgium. December 3-5, 1990.

Taylor, R.D., C.O. Pedersen, D.E. Fisher, R.J. Liesen, and L.K. Lawrie. 1991. Impact of simultaneous simulation of building and mechanical systems in heat balance based energy analysis programs on system response and control. In *Proceedings of Building Simulation '91*. Sophia Antipolis, France: IBPSA.

Winkelmann, F.C. 2001. Modeling Windows in EnergyPlus. In *Proceedings of Building Simulation 2001*. Rio de Janiero, Brazil: IBPSA.

Winkelmann, F.C., B.E. Birdsall, W.F. Buhl, K.L. Ellington, A.E. Erdem, J.J. Hirsch, and S. Gates. 1993. *DOE-2 Supplement, Version 2.1E*, LBL-34947. Lawrence Berkeley National Laboratory. Springfield, Va.: National Technical Information Service.

Winkelmann F.C., and S.E. Selkowitz. 1985. Daylighting simulation in the DOE-2 building energy analysis program. In *Energy and Buildings* 8: 271-286.

Witte, M.J., R.J. Henninger, J. Glazer, and D.B. Crawley. 2001. Testing and validation of a new building energy simulation program. In *Proceedings of Building Simulation 2001*. Rio de Janiero, Brazil: IBPSA.